BRITISH STANDARD

BS EN 12899-1:2001

Including Corrigenda Nos. 1 and 2

Fixed, vertical road traffic signs —

Part 1: Fixed signs

The European Standard EN 12899-1:2001 has the status of a British Standard

ICS 93.080.30

NO COPYING WITHOUT BSI PERMISSION EXCEPT AS PERMITTED BY COPYRIGHT LAW

British Standards

National foreword

This British Standard is the official English language version of BS EN 12899-1:2001. It partially supersedes BS 873:1983 parts 1 and 7 and supersedes parts 5 and 6, which are withdrawn.

The UK participation in its preparation was entrusted by Technical Committee B/509, Road equipment, to Subcommittee B/509/3, Traffic signs.

A list of organizations represented on B/509/3 can be obtained on request to its secretary.

Additional information

BS EN 12899-1:2001 fully takes into account the requirements of the European Commission Mandate M/111, Circulation fixtures, given under the EU Construction Products Directive (89/106/EEC), but is not intended to lead to CE marking.

BS EN 12899-1:2001 is a standard which sets down performance values rather than a method of manufacture. It has, in most cases, several performance classes for each property such as coefficient of retroreflection (R').

It replaces those parts of BS 873 that apply to fixed vertical traffic signs, parts 1 and 7 (clauses dealing with non-illuminated posts).

BS EN 12899-1:2001 gives guidance and background information to manufacturers of fixed vertical road traffic signs on the use of BS EN 12899-1:2001. In particular it provides guidance in relation to the information that a manufacturer receives from purchasers. This would enable road traffic signs to be designed and manufactured on the basis of that information whilst conforming to BS EN 12899-1:2001. Information on visual and physical performance classes is also included.

This British Standard, having been prepared under the direction of the Building and Civil Engineering Sector Policy and Strategy Committee, was published under the authority of the Standards Policy and Strategy Committee on 16 May 2002

© BSI 2006

ISBN 0 580 37515 3

Amendments issued since publication

Amd. No.	Date	Comments
14000 Corrigendum No. 1	5 August 2002	Correction to date of withdrawal
16697 Corrigendum No. 2	31 October 2006	Addition of National Annex NA

BS EN 12899-1:2001 has different performance classes and some classes comprise a range of values. Recommended classes for visual and physical performance properties considered most suitable for UK practice is given in National Annex NA.

In the opinion of BSI Technical Committee, areas not covered by BS EN 12899-1:2001 that affect its use in practice are summarized below. Guidance is given on some of these matters in the National Annex NA:

— microprismatic material;

— external illumination of signs;

— defined safety factors for use when calculating or testing physical performance;

— methods that state the physical characteristics of sign supports separately from the complete sign assembly;

— the specification of posts as separate products.

NOTE 1 Example values are given in the example calculation in informative Annex B, these values are neither normative nor comprehensive. This annex will be omitted in a future revision of BS EN 12899-1:2001.

NOTE 2 A revision of BS EN 12899-1:2001 is in progress and a national annex will be included to give additional advice on application. It is likely to be late in 2007 before this revision is issued.

This publication does not purport to include all the necessary provisions of a contract. Users are responsible for its correct application.

Compliance with a British Standard cannot confer immunity from legal obligations.

blank

EUROPEAN STANDARD

NORME EUROPÉENNE

EUROPÄISCHE NORM

EN 12899-1

December 2001

ICS 93.080.30

English version

Fixed, vertical road traffic signs - Part 1: Fixed signs

Signaux fixes de signalisation routière verticale - Partie 1: Panneaux fixes

Ortsfeste, vertikale Straßenverkehrszeichen - Teil 1: Ortsfeste Verkehrszeichen

This European Standard was approved by CEN on 20 January 2001.

CEN members are bound to comply with the CEN/CENELEC Internal Regulations which stipulate the conditions for giving this European Standard the status of a national standard without any alteration. Up-to-date lists and bibliographical references concerning such national standards may be obtained on application to the Management Centre or to any CEN member.

This European Standard exists in three official versions (English, French, German). A version in any other language made by translation under the responsibility of a CEN member into its own language and notified to the Management Centre has the same status as the official versions.

CEN members are the national standards bodies of Austria, Belgium, Czech Republic, Denmark, Finland, France, Germany, Greece, Iceland, Ireland, Italy, Luxembourg, Netherlands, Norway, Portugal, Spain, Sweden, Switzerland and United Kingdom.

EUROPEAN COMMITTEE FOR STANDARDIZATION
COMITÉ EUROPÉEN DE NORMALISATION
EUROPÄISCHES KOMITEE FÜR NORMUNG

Management Centre: rue de Stassart, 36 B-1050 Brussels

© 2001 CEN All rights of exploitation in any form and by any means reserved worldwide for CEN national Members.

Ref. No. EN 12899-1:2001 E

Contents

Foreword 3
Introduction 4
1 Scope 5
2 Normative references 5
3 Terms and definitions, symbols and abbreviations 6
4 Dimensions and tolerances 7
5 Performance requirements 7
6 Methods of test 18
7 Marking, labelling and product information 20
Annex A (informative) **Tests for structural properties** 22
Annex B (informative) **Example of structural calculation based on allowable deflections** 24
Annex C (normative) **Test points for horizontal and vertical loads** 34
National Annex NA (informative) **Recommendations for fixed traffic signs** 45

Foreword

This European Standard has been prepared by the Technical Committee CEN /TC 226, "Road equipment", the Secretariat of which is held by AFNOR.

This European Standard shall be given the status of a national standard, either by publication of an identical text or by endorsement, at the latest by June 2002, and conflicting national standards shall be withdrawn at the latest by December 2005.

EN 12699 consists of the following parts, under the general title *Fixed, vertical road traffic signs*

— *Part 1 : Fixed signs*

— *Part 2 : Transilluminated traffic bollards*

— *Part 3 : Road delineators and road reflective devices (delineation posts)*

— *Part 4 : Evaluation of conformity, factory production control*

— *Part 5 : Evaluation of conformity, initial type testing*

It derives from performance requirements and test methods published in CEN, CENELEC, CIE and ISO documents together with standards of the CEN member organisations.

The annexes A and B are informative. Annex C is normative.

According to the CEN/CENELEC Internal Regulations, the national standards organizations of the following countries are bound to implement this European Standard : Austria, Belgium, Czech Republic, Denmark, Finland, France, Germany, Greece, Iceland, Ireland, Italy, Luxembourg, Netherlands, Norway, Portugal, Spain, Sweden, Switzerland and the United Kingdom.

Introduction

This standard is for use by Road Authorities and private developers who wish to use signs similar to those used on public highways on their own land.

The standard may be used to implement type approval and certification testing.

1 Scope

This part of EN 12899:2001 specifies requirements for new fixed signs :

— non-retroreflective and retroreflective fixed signs ;

— non-retroreflective and retroreflective fixed signs when they are illuminated at night by external lighting luminaires ; and

— transilluminated signs.

The main intended use of fixed signs is for the instruction and guidance of road users on public and private land.

It defines performance limits and a range of performance classes for both sign assemblies without vertical supports and assemblies complete with vertical supports, as well as sign faces and supporting substrates, sign fixings and supports and external lighting luminaires.

Colorimetric and retroreflective properties as well as the luminance are specified. The retroreflective properties are in respect of materials based on the use of glass bead technology only. Structural requirements for signs and sign supports include performance under static and dynamic loading.

It also defines performance levels to be maintained after natural weathering exposure.

NOTE Where tests for extremely low temperatures are required they should be in accordance with the customer's requirements.

This standard does not require the replacement of existing signs.

Products and requirements not covered by this standard :

a) sign gantries, cantilevers and sign foundations ;

b) signs constructed from light emitting diodes (LED) or fibre optics ;

c) variable message signs ;

d) transilluminated retroreflective signs ;

e) passive safety performance requirements of sign support structures against vehicle impact ;

f) signs used for temporary purposes.

2 Normative references

This European Standard incorporates by dated or undated reference, provisions from other publications. These normative references are cited at the appropriate places in the text and the publications are listed hereafter. For dated references, subsequent amendments to or revisions of any of these publications apply to this European Standard only when incorporated in it by amendment or revision. For undated references the latest edition of the publication referred to applies (including amendments).

EN 40-5, *Lighting columns – Part 5 : Specification for steel lighting columns.*

EN 60529:1991, *Degrees of protection provided by enclosures (IP code) (IEC 60529:1989).*

EN 12767, *Passive safety of support structures for road equipment – Requirements and test methods.*

EN 60598-1:1990, *Luminaires – Part 1 : Specification for general requirements and tests (IEC 60598-1:1996, modified).*

ENV 1995-1-1, *Eurocode 5 - Design of timber structures – Part 1-1 : General rules and rules for buildings.*

ENV 1999-1-1, *Eurocode 9 : Design of aluminium structures - Part 1-1 : General rules and rules for buildings.*

ENV 1991-2-4:1995, *Eurocode 1 : Basis of design and actions on structures – Part 2-4 : Actions on structures – Wind actions.*

ENV 1993-1-1:1992, *Eurocode 3 : Design of steel structures - Part 1-1 : General rules and rules for buildings.*

ISO 4, *Information and documentation – Rules for the abbreviation of title words and titles of publications.*

ISO 139, *Textiles - Standard atmospheres for conditioning and testing.*

ISO 877, *Plastics - Methods of exposure to direct weathering, to weathering using glass - Filtered daylight, and to intensified weathering by daylight using Fresnel mirrors*.

ISO 1459, *Metallic coatings – Protection against corrosion by hot dip galvanised – Guiding principles.*

ISO 1461, *Hot dip galvanised coatings on fabricated iron and steel articles - Specifications and test methods.*

ISO 6272, *Paints and varnishes - Falling-weight test.*

ISO 9227, *Corrosion tests in artificial atmospheres - Salt spray tests.*

CIE 15.2, *Colorimetry.*

CIE 17.4, *International lighting vocabulary.*

CIE 39.2, *Recommendations for surface colours for visual signalling*.

CIE 54, *Retroreflection definition and measurement*.

CIE 74, *Roadsigns*.

3 Terms and definitions, symbols and abbreviations

For the purposes of this European Standard, the symbols and abbreviations given in ISO 4 apply. The photometric terms and definitions given in CIE 17.4 and the sign descriptions given in CIE 74 also apply, together with the following :

3.1
fixed sign
sign which is intended to remain fixed in position and whose supports are usually set into the ground

3.2
protective edge
fabrication intended to reinforce the edge of the sign and to reduce the severity of personal injury in the event of bodily impact with the sign edge

3.3
substrate
material used to support the non-retroreflective and retroreflective sign face materials

3.4
standard shape sign faces
circles, triangles, squares, diamonds and octagons containing legends in accordance with the provisions of the Vienna Convention

3.5
sign face
material or materials applied to the substrate to produce the finished surface of the fixed sign

4 Dimensions and tolerances

4.1 Dimensions and tolerances of standard shape sign faces

The dimensions and tolerances of standard shape sign faces shall conform to the customer's requirements.

4.2 Corner radii

Unless otherwise specified in the customer's requirements the corner radii shall be not less than 10 mm.

5 Performance requirements

5.1 Design

5.1.1 General

Steel constructions and steel mounting elements shall conform to ENV 1993-1-1:1992.

Aluminium constructions shall conform to ENV 1999-1-1.

Timber constructions shall conform to ENV 1995-1-1.

Other materials are acceptable but if they are used the fixed signs shall conform to this standard.

The colour of the back of the substrate shall be in accordance with the customer's requirements.

Welded fabrications shall comply with the appropriate codes and standards.

5.1.2 Piercing

When sign substrates are stiffened with additional reinforcing members, these shall be fixed to the sign substrate to conform with Table 1.

Table 1 — Piercing of sign face

Class	Requirements
P1	The sign face shall be pierced only at intervals of not less than 150 mm in any direction, except when required for the purpose of securing the sign substrate to the supporting structure
P2	The sign face shall be not pierced, except when required for the purpose of securing the sign substrate to the supporting structure
P3	The sign face shall not be pierced for any reason

5.1.3 Sign edges

Sign edges shall conform to Table 2.

Table 2 — Edges of sign plates

Class	Requirements
E1	Non-protective, the substrate being a flat sheet of material
E2	Protective, with the edge stamped, formed, pressed, or covered by an edging profile
E3	Protective, protection being provided by the mounting structure

5.1.4 Fixings

Sign fixings shall fit sign supports such that they prevent rotation around the support and enable conformance to 5.3.1 to 5.3.3. Sign fixings shall also conform to 5.3.5.

5.1.5 Supports

Supports shall conform to 5.3.1 to 5.3.5 and 5.3.8. Hollow supports shall be enclosed at the top to prevent moisture ingress.

5.1.6 External lighting luminaires

External lighting luminaires shall conform to EN 60598-1 and to 5.3.8.

The structural design shall include the whole structure consisting of housing, support and fixings. Lamps shall be protected by a housing against rain, wind load and other adverse outdoor conditions. Luminaire housings and luminaire panels shall conform to 5.3.8.

NOTE Luminaires should be mounted so as not to obscure the driver's view of the sign face.

5.1.7 Sign housings for transilluminated signs

Sign housings for transilluminated signs shall conform to 5.3.8 and shall be designed to ensure reliable transfer of all static and dynamic forces to the fixing and mounting structures. The walls of the housing shall be designed to satisfy the static requirements. Corners shall be rounded. The design shall ensure that rainwater does not run off the housing and down the sign face.

5.1.8 Base compartments

Where electrical apparatus is to be housed in a sign post, the post shall be fitted with a base compartment conforming to EN 40-5. Each base compartment shall be fitted with a secure lock and shall conform to 5.3.8.

5.2 Visual performance

5.2.1 Colour and luminance factor

5.2.1.1 Daylight appearance of non-retroreflective signs

When tested in accordance with the procedure specified in 6.4, the chromaticity and the luminance factor β shall conform to Table 3 or Table 4.

Table 3 — Chromaticity and luminance factors Class NR 1 : Non-retroreflective signs

Colour	1		2		3		4		Luminance factor
	x	y	x	y	x	y	x	y	β
White	0,350	0,360	0,300	0,310	0,290	0,320	0,340	0,370	≥ 0,75
Yellow	0,522	0,477	0,470	0,440	0,427	0,483	0,465	0,534	≥ 0,45
Orange	0,610	0,390	0,535	0,375	0,506	0,404	0,570	0,429	≥ 0,20
Red	0,735	0,265	0,674	0,236	0,569	0,341	0,655	0,345	≥ 0,07
Blue	0,078	0,171	0,196	0,250	0,225	0,184	0,137	0,038	≥ 0,05
Green	0,313	0,682	0,313	0,453	0,177	0,362	0,026	0,399	≥ 0,10
Brown	0,510	0,370	0,427	0,353	0,407	0,373	0,475	0,405	0,04 ≤β ≤ 0,15
Grey	0,350	0,360	0,300	0,310	0,290	0,320	0,340	0,370	0,16 ≤β ≤ 0,24
Black	0,385	0,355	0,300	0,270	0,260	0,310	0,345	0,395	≤ 0,03

Table 4 — Chromaticity and luminance factors Class NR2 : Non-retroreflective signs

Colour	1		2		3		4		Luminance factor
	x	y	x	y	x	y	x	y	β
White	0,305	0,315	0,335	0,345	0,325	0,355	0,295	0,325	≥ 0,75
Yellow	0,494	0,505	0,470	0,480	0,493	0,457	0,522	0,477	≥ 0,45
Red	0,735	0,265	0,700	0,250	0,610	0,340	0,660	0,340	≥ 0,07
Green	0,230	0,440	0,260	0,440	0,260	0,470	0,230	0,470	≥ 0,10
Blue	0,140	0,140	0,160	0,140	0,160	0,160	0,140	0,160	≥ 0,05
Brown	0,467	0,386	0,447	0,386	0,447	0,366	0,467	0,366	0,04 ≤β ≤ 0,15
Grey	0,305	0,315	0,335	0,345	0,325	0,355	0,295	0,325	0,16 ≤β ≤ 0,24

NOTE The limits specified in Table 3, with the exception of brown and grey, are recommended in CIE 39.2 as surface colours for visual signalling and; when colours deteriorate beyond these chromaticity limits the signs may not be suitable for the intended purpose. The chromaticity limits specified in table 4 ensure a more uniform appearance and consistency in the colour of new signs which are installed at different times than the limits specified in Table 3. Colours conforming to the limits of Table 4 may also be expected to take longer to deteriorate beyond the limits of Table 3.

5.2.1.2 Daylight appearance of retroreflective signs

When illuminated with CIE standard illuminant D 65 and measured with 45/0 geometry, the chromaticity and the luminance factor β shall conform to Table 5 or Table 6.

Table 5 — Chromaticity and luminance factors Class R1 : Retroreflective signs

Colour	1		2		3		4		Luminance factor β	
	x	y	x	y	x	y	x	y	Table 8	Table 9
White	0,355	0,355	0,305	0,305	0,285	0,325	0,335	0,375	≥ 0,35	≥ 0,27
Yellow see Table 8	0,522	0,477	0,470	0,440	0,427	0,483	0,465	0,534	≥ 0,27	
Yellow see Table 9	0,545	0,454	0,487	0,423	0,427	0,483	0,465	0,534		≥ 0,16
Orange	0,610	0,390	0,535	0,375	0,506	0,404	0,570	0,429	≥ 0,17	≥ 0,14
Red	0,735	0,265	0,674	0,236	0,569	0,341	0,655	0,345	≥ 0,05	≥ 0,03
Blue	0,078	0,171	0,150	0,220	0,210	0,160	0,137	0,038	≥ 0,01	≥ 0,01
Green	0,007	0,703	0,248	0,409	0,177	0,362	0,026	0,399	≥ 0,04	≥ 0,03
Dark Green	0,313	0,682	0,313	0,453	0,248	0,409	0,127	0,557	0,01 ≤ ß ≤ 0,07	
Brown	0,455	0,397	0,523	0,429	0,479	0,373	0,558	0,394	0,03 ≤ ß ≤ 0,09	
Grey	0,350	0,360	0,300	0,310	0,285	0,325	0,335	0,375	0,12 ≤ ß ≤ 0,18	

Table 6 — Chromaticity and luminance factors Class R2 : Retroreflective signs

Colour	1		2		3		4		Luminance factor β	
	x	y	x	y	x	y	x	y	Table 8	Table 9
White	0,305	0,315	0,335	0,345	0,325	0,355	0,295	0,325	≥ 0,35	≥ 0,27
Yellow see Table 8	0,494	0,505	0,470	0,480	0,493	0,457	0,522	0,477	≥ 0,27	
Yellow see Table 9	0,494	0,505	0,470	0,480	0,513	0,437	0,545	0,454		≥ 0,16
Red	0,735	0,265	0,700	0,250	0,610	0,340	0,660	0,340	≥ 0,05	≥ 0,03
Blue see Table 8	0,130	0,086	0,160	0,086	0,160	0,120	0,130	0,120	≥ 0,01	
Blue see Table 9	0,130	0,090	0,160	0,090	0,160	0,140	0,130	0,140		≥ 0,01
Green see Table 8	0,110	0,415	0,150	0,415	0,150	0,455	0,110	0,455	≥ 0,04	
Green see Table 9	0,110	0,415	0,170	0,415	0,170	0,500	0,110	0,500		≥ 0,03
Dark Green	0,190	0,580	0,190	0,520	0,230	0,580	0,230	0,520	0,01≤ β ≤ 0,07	
Brown	0,455	0,397	0,523	0,429	0,479	0,373	0,558	0,394	0,03 ≤ β ≤ 0,09	
Grey	0,305	0,315	0,335	0,345	0,325	0,355	0,295	0,325	0,12 ≤ β ≤ 0,18	

NOTE The limits specified in Table 5, with the exception of dark green, brown and grey, are recommended in CIE 39.2 as surface colours for visual signalling. When colours deteriorate beyond these chromaticity limits the signs may not be suitable for the intended purpose. The chromaticity limits specified in Table 6 ensure a more uniform appearance and consistency in the colour of new signs which are installed at different times than the limits specified in Table 5. Colours conforming to the limits of table 6 may also be expected to take longer to deteriorate beyond the limits of table 5.

5.2.1.3 Colour of transilluminated signs

Transilluminated sign colours in daytime and night-time conditions shall conform to the requirements of Table 7.

Table 7 — Chromaticity and luminance factors : Transilluminated signs

Colour	Day/ Night	1		2		3		4		Luminance factor ß	
		x	y	x	y	x	y	x	y	Min.	Max.
Red	D/N	0,690	0,310	0,595	0,315	0,569	0,341	0,655	0,345	0,07	--
Orange	D/N	0,610	0,390	0,535	0,375	0,506	0,404	0,570	0,429	0,20	--
Yellow	D/N	0,522	0,477	0,470	0,440	0,427	0,483	0,465	0,534	0,45	--
Green*	D/N	0,313	0,682	0,313	0,453	0,209	0,383	0,013	0,486	0,10	--
Blue	D/N	0,078	0,171	0,196	0,250	0,225	0,184	0,137	0,038	0,05	--
Purple	D/N	0,302	0,064	0,307	0,203	0,374	0,247	0,457	0,136	0,05	--
White	D	0,350	0,360	0,300	0,310	0,290	0,320	0,340	0,370	0,75	--
White	N	0,440	0,382	0,285	0,264	0,285	0,332	0,440	0,432	--	--
Grey	D	0,350	0,360	0,300	0,310	0,290	0,320	0,340	0,370	0,16	0,24
Grey	N	0,440	0,382	0,285	0,264	0,285	0,332	0,440	0,432	--	--
Black	D/N	0,385	0,355	0,300	0,270	0,260	0,310	0,345	0,395	--	0,03
Green[a]	D/N	0,313	0,682	0,313	0,453	0,177	0,362	0,026	0,399	0,10	--

[a] For the use of green see the recommendations of CIE 39.2.

5.2.2 Coefficient of retroreflection R'

The minimum initial coefficient of retroreflection R' ($cd \cdot lx^{-1} \cdot m^{-2}$) of retroreflective signs when measured in accordance with the procedure specified in CIE 54, using CIE standard illuminant A, shall conform to Tables 8 or 9, as appropriate.

The coefficient of retroreflection (R') of all printed colours, except white, shall be not less than 70 % of the values in Tables 8 or 9 for Class Ref 1 and Class Ref 2 signs respectively.

Table 8 — Coefficient of retroreflection R' : Class Ref 1
unit : $cd \cdot lx^{-1} \cdot m^{-2}$

Geometry of measurements		Colour							
α	β_1 (β_2=0)	White	Yellow	Red	Green	Blue	Brown	Orange	Grey
12'	+5°	70	50	14,5	9	4	1	25	42
	+30°	30	22	6	3,5	1,7	0,3	10	18
	+40°	10	7	2	1,5	0,5	#	2,2	6
20'	+5°	50	35	10	7	2	0,6	20	30
	+30°	24	16	4	3	1	0,2	8	14,4
	+40°	9	6	1,8	1,2	#	#	2,2	5,4
2°	+5°	5	3	1	0,5	#	#	1,2	3
	+30°	2,5	1,5	0,5	0,3	#	#	0,5	1,5
	+40°	1,5	1,0	0,5	0,2	#	#	#	0,9
# indicates "Value greater than zero but not significant or applicable".									

Table 9 — Coefficient of retroreflection R' : Class Ref 2
unit : $cd \cong lx^{-1} \cong m^{-2}$

Geometry of measurements		Colour								
α	β_1 (β_2=0)	White	Yellow	Red	Green	Dark Green	Blue	Brown	Orange	Grey
12'	+5°	250	170	45	45	20	20	12	100	125
	+30°	150	100	25	25	15	11	8,5	60	75
	+40°	110	70	15	12	6	8	5,0	29	55
20'	+5°	180	120	25	21	14	14	8	65	90
	+30°	100	70	14	12	11	8	5	40	50
	+40°	95	60	13	11	5	7	3	20	47
2°	+5°	5	3	1	0,5	0,5	0,2	0,2	1,5	2,5
	+30°	2,5	1,5	0,4	0,3	0,3	#	#	1	1,2
	+40°	1,5	1,0	0,3	0,2	0,2	#	#	#	0,7
# indicates "Value greater than zero but not significant or applicable".										

5.2.3 Mean luminance of transilluminated signs

Transilluminated signs shall conform to the requirements of Table 10 when measured in accordance with 6.5.

Table 10 — Mean luminance L of transilluminated signs
unit : cd·m^{-2}

Colour	Class L1	Class L2	Class L3
White	$40 \leq L \leq 150$	$150 \leq L \leq 300$	$300 \leq L \leq 900$
Yellow	$30 \leq L \leq 100$	$100 \leq L \leq 300$	$300 \leq L \leq 900$
Red	$6 \leq L \leq 20$	$20 \leq L \leq 50$	$50 \leq L \leq 110$
Blue	$4 \leq L \leq 10$	$10 \leq L \leq 40$	$40 \leq L \leq 80$
Green	$8 \leq L \leq 20$	$20 \leq L \leq 70$	$70 \leq L \leq 180$
Dark Green	$4 \leq L \leq 10$	$10 \leq L \leq 40$	$40 \leq L \leq 80$
Brown	$4 \leq L \leq 10$	$10 \leq L \leq 40$	$40 \leq L \leq 80$

5.2.4 Luminance contrast of transilluminated signs K

The luminance contrast of transilluminated signs, as determined by the ratio of the luminance of the contrast colour to the luminance of the colour, shall conform to the requirements of Table 11.

Table 11 — Luminance contrast K of transilluminated signs

Colour	Blue	Red	Green	Dark Green	Brown
Contrast colour	White	White	White	White & Yellow	White
Luminance contrast	$5 \leq K \leq 15$	$5 \leq K \leq 15$	$5 \leq K \leq 15$	$5 \leq K \leq 15$	$5 \leq K \leq 15$

5.2.5 Uniformity of luminance

For each colour of externally illuminated and transilluminated signs, the uniformity of luminance, determined by the ratio of the lowest to the highest level measured at any part of the sign, shall conform to the requirements of Table 12.

Table 12 – Uniformity of luminance

Class	Maximum ratio
U1	1/10
U2	1/6
U3	1/3

5.3 Physical performance

5.3.1 Structural performance - general

The structural performance of signs and luminaires including their supports and fixings shall be calculated in accordance with 6.6 or 6.7 respectively.

The complete sign assembly shall withstand dead and live loading, multiplied by the appropriate safety factor.

NOTE 1 When calculation in accordance with 6.6 is deemed inappropriate, tests may be made in accordance with Annex A. An example of calculation is given in Annex B.

NOTE 2 In the case of signs mounted on large structures, for example sign gantries, the deflections to be calculated are those between the sign or sign supports and the structure, not the deflection of the structure itself.

5.3.2 Loads

5.3.2.1 Wind actions

Wind actions shall be calculated in accordance with ENV 1991-2-4:1995.

The wind actions shall be calculated from the reference wind velocity and the terrain category specified by the purchaser. In special areas such as mountainous regions the purchaser shall specify additional references.

The wind load for calculating the temporary deflections shall be based on 75 % of the reference wind velocity (equivalent to 1-year mean return period).

Appropriate classes for wind loads as given in Table 13 shall be used.

NOTE The wind loads in table 13 does not include safety factors and shape factors, see also Annex B.

Table 13 — Wind loads

Class	Wind loads $kN \cdot m^{-2}$
WL0	No performance determined
WL1	0,40
WL2	0,60
WL3	0,80
WL4	1,00
WL5	1,20
WL6	1,40
WL7	1,60

For calculating the temporary deflections the values for wind loads in Table 13 shall be multiplied by $0{,}75^2$.

5.3.2.2 Dead loads

Dead loads are the weight of the individual components of the finished sign such as substrate, sign housing, protective edge, stiffeners, luminaries, supports, fixings etc..

5.3.2.3 Point loads

The point load as specified by the purchaser shall be placed as indicated in the illustrations in Annex C.

Appropriate point loads as given in Table 14 shall be used.

Table 14 — Point loads

Class	Point load kN
PL0	No performance determined
PL1	0,15
PL2	0,30
PL3	0,50
PL4	0,75
PL5	1,00

5.3.2.4 Dynamic load from snow clearance

The dynamic load from snow clearance as specified by the purchaser shall be placed as indicated in the illustrations in Annex C.

Appropriate values for the dynamic snow loads as given in Table 15 shall be used.

Table 15 — Dynamic snow loads

Class	Dynamic snow loads $kN \cdot m^{-2}$
DSL0	No performance determined
DSL1	1,5
DSL2	2,5
DSL3	3,0
DSL4	4,0

5.3.3 Deflections

5.3.3.1 Temporary deflections

Only temporary deflections from wind actions shall be calculated or measured in accordance with 6.6 or 6.7 respectively.

The temporary deflection shall be determined at the point where the deflection is the greatest.

The maximum temporary deflection under load for each of :

— sign panels relative to their supports ;

— the supports themselves relative to the ground ;

shall conform to Tables 16 and 17.

Table 16 — Maximum temporary deflection - Bending

Class	Bending $mm \cdot m^{-1}$
TDB0	No performance determined
TDB1	2
TDB2	5
TDB3	10
TDB4	25
TDB5	50
TDB6	100

Table 17 — Maximum temporary deflection - Torsion

Class	Torsion degree·m
TDT0	No performance determined
TDT1	0,02
TDT2	0,06
TDT3	0,11
TDT4	0,29
TDT5	0,57
TDT6	1,15

NOTE Table 17 only applies to a single signpost subjected to torsion from an asymmetrical position or shape of the sign(s).

5.3.3.2 Permanent deflections

The maximum permanent deflection shall not exceed 20 % of the relevant class specified in Table 16 or Table 17, which may apply, as appropriate.

5.3.4 Passive Safety

Sign supports shall be in accordance with EN 12767.

5.3.5 Corrosion resistance

The classes of surface protection against corrosion shall be in accordance with Table 18.

Table 18 — Surface protection

Class	Requirements
SP0	Surface protection not provided
SP1	Protective coatings provided
SP2	Inherent surface protection provided

When subjected to the neutral salt spray test in accordance with ISO 9227 at (35 ± 2) °C for 10 periods of 22 h duration while being allowed to dry between spraying the test sample to SP1 or SP2 shall show no change in appearance, using an untreated sample for comparison.

Hot dipped galvanised steel components shall conform to ISO 1459 and ISO 1461 and to the corrosion class specified by the purchaser.

Any part of an aluminium post which is to be placed underground shall conform to SP1.

5.3.6 Natural weathering

5.3.6.1 General

Test signs and test samples, prepared in accordance with 6.2 and 6.3, shall be exposed, inclined at an angle of 45° to the horizontal and facing the equator, [*south facing for Europe*] in accordance with ISO 877, Method A.

5.3.6.2 Non-retroreflective signs

After exposure for two years in accordance with 5.3.6, the chromaticity and luminance factor shall conform to the requirements of Table 3.

5.3.6.3 Retroreflective signs

After exposure for three years in accordance with 5.3.6, when tested at an observation angle (α) of 20 minutes and entrance angles (β_1 = 5° and 30°, with β_2 = 0°), the chromaticity and luminance factor shall conform to the requirements of Table 5 and the coefficient of retroreflection shall be not less than 80 % of the values required in 5.2.2 as appropriate.

5.3.6.4 Transilluminated signs

After exposure for two years in accordance with 5.3.6, the chromaticity and luminance factor shall conform to the requirements of Table 7 and the mean luminance and luminance contrast shall conform to the requirements of Table 10 and Table 11 respectively.

5.3.7 Impact resistance

When tested in accordance with ISO 6272, using a mass of 450 g with a contact radius of 50 mm dropped from a height of 220 mm, there shall be no cracking or delamination from any substrate, outside a circle of 6 mm radius with the point of impact as centre.

The test sign shall be supported as it would be when installed, or the test sample shall be supported over an open area 100 mm x 100 mm.

5.3.8 Protection of electrical equipment against foreign bodies, dust and water

The minimum levels of protection of sign supports and base compartments enclosing electrical equipment, transilluminated sign housings, luminaires and luminaire housings against penetration by dust and water, laid down in EN 60529:1991, shall be level 2 for solid particles and level 3 for water. Subject to these minima, the required IP level shall be as specified by the customer's requirements or the purchaser.

5.4 Electrical

5.4.1 General

All electrical components shall conform to the relevant standards. The relevant CENELEC standards shall be observed during production, assembly and installation. Mounting devices shall have cable entries to accommodate cable connection equipment. The fastening bars shall conform to relevant Eurocodes/CENELEC standards.

5.4.2 Safety

Internal supply connections, earthing, protection against electric shock, internal wiring, insulation, resistance and di-electric strength shall conform to EN 60598-1. Excessive heat and condensation which can induce a short circuit, circuit failure or overcome electrical insulation shall not occur. All electrical components built into the equipment shall conform to the safety and interchangeability requirements of the relevant European Standards.

5.4.3 Power factor

Means shall be provided to correct the power factor in accordance with National electricity supply requirements. The overall power factor shall be not adversely affected by lamp circuit failures.

5.4.4 Light sources and circuits

Lit signs may have either a single light source or multiple light sources.

NOTE 1 Multiple light source circuits should be arranged so that in the event of one circuit failure the sign will remain illuminated as evenly as possible.

NOTE 2 For safety reasons, signs with multiple light sources circuits are recommended.

5.4.5 Electrical efficiency

Each individual light source shall have an efficiency of at least 25 $lm \cdot W^{-1}$.

NOTE The nominal life of light sources should be specified by the purchaser.

6 Methods of test

6.1 Test conditions

Tests specified in 6.4, 6.5 and 6.7 shall be carried out at a temperature of (23 ± 3) °C and a relative humidity of (50 ± 5) %.

6.2 Test samples

Tests shall be conducted on finished signs or on prepared samples representative of finished signs.

6.3 Preparation of test samples and test panels

Test panels shall, unless otherwise specified, be prepared by cutting a piece 100 mm x 100 mm from samples selected according to 6.2. Test samples and test panels shall be conditioned in accordance with ISO 139 and shall be identified on the back.

6.4 Colour and luminance factor

Measurements shall be made in accordance with the procedures specified in CIE 15.2 using standard illuminant D65 and CIE 45/0 geometry.

6.5 Luminance of transilluminated signs

Measurements shall be made in accordance with the procedures specified in CIE 74.

6.6 Methods of calculation for the verification of structural performance

6.6.1 Calculations shall be in accordance with, and fulfil the requirements of ENV 1993-1-1:1992, ENV 1995-1-1 or ENV 1999-1-1 as appropriate. For metals the calculations shall be in accordance with elasticity theory.

6.6.2 No safety factor shall be applied when calculating the loading. Only shape factor for the individual member shall be applied.

6.7 Methods of measuring deflection

6.7.1 Apparatus and materials

6.7.1.1 Sufficient bags of lead shot or dry sand to provide a uniformly distributed test load over the test sign, equivalent to the specified wind pressure.

6.7.1.2 Means of clamping the base of the sign post or posts so that they cannot rotate during the test. The posts shall not be able to deflect at the point where they are clamped due to any loading applied to the sign during the tests. The posts shall be mounted horizontally with sufficient clear space beneath to permit foreseeable deflections of both the posts and any sign substrate attached to them.

6.7.1.3 Means of measuring sign and post deflection.

NOTE 1 Uniform distribution of the test load may be ensured by dividing the surface under test into squares and loading the area of each square to the required amount. Lead shot is recommended as it is more stable when being placed in position.

NOTE 2 The expressions "vertical axis, "horizontal side" and "horizontal axis" used in 6.7.2 apply as if the sign was in its normal upright position.

6.7.2 Procedure

6.7.2.1 Externally illuminated signs

a) Fix the sign to a single post, or as many posts of the same size as will be used in normal practice, using a fixing method representative of normal use.

— When using a single post fix the sign with its vertical axis in line with the centre line of the post,

— when using two posts, the sign fixings shall be located at a distance from the edge of the sign of L/5 or 300 mm, whichever is the smaller, where L is the greatest dimension of the sign measured at right-angles to the posts,

— when using more than two posts, the outer fixings shall be located at a distance from the edge of the sign of L/5 or 300 mm, whichever is the smaller, where L is the greatest dimension of the sign measured at right-angles to the posts. The remaining sign fixings shall be evenly spaced between the outer fixings,

b) mount the post in accordance with 6.7.1 with the sign above the posts and in the horizontal plane. The post shall be sufficiently long to enable clamping as required by 6.7.1; the dimension from the clamp to the top of the sign shall correspond to normal sign mounting height. The top of the post shall be in line with the top of the sign ;

c) apply a uniformly distributed test load equivalent to the specified wind load over the area of the sign for 5 min. With the load applied, measure the deflection of the sign at :

— the extremities of the horizontal side for triangles ;

— the extremities of the horizontal axis for other sign shapes ;

— the mid-point between each pair of posts on the horizontal axis (where more than one post is used) ;

— the deflection of the top of the post ;

d) remove the load and after at least ten minutes measure :

— the residual deflection of the sign at the same points as before ;

— the residual deflection of the top of the post ;

e) remount the same test sign so that it is below the post and in the horizontal plane and repeat the above procedure for the back of the sign substrate ;

f) measure deflection under load and residual deflection as before.

6.7.2.2 Transilluminated signs

Using the procedure set out in 6.7.2.1, measure :

— deflection under load and residual deflection at the centre of the sign face ;

— deflection under load and residual deflection at the extremities of the horizontal axis of the back of the sign housing.

7 Marking, labelling and product information

7.1 Complete signs

7.1.1 Marking and labelling

Finished sign substrates (with sign face applied) shall be clearly and durably marked on the back with the following information :

a) the number and date of this European Standard ;

b) the relevant performance classification of the product ;

c) the month and last two digits of the year of manufacture ;

d) the name, trade mark or other means of identification of the manufacturer or supplier when not the manufacturer.

The markings shall be in characters legible at a normal reading distance such that the total area of the marking does not exceed 30 cm^2 and shall be sufficiently durable to last the expected life of the sign.

7.1.2 Product information

The manufacturer or supplier shall make available the following information :

a) instructions on the assembly and erection of the sign ,;

b) details of any limitations on location or use ;

c) instructions on the operation, maintenance and cleaning of the sign, including lamp replacement procedures.

7.2 Components of signs

Where a component conforms to a European Standard the marking shall be that specified in the relevant standard. The manufacturer or supplier shall make available the following information :

a) where the component is not covered by and/or does not conform to a European Standard, a detailed technical specification of the component,

b) instructions on the application of the component,

c) details of any limitations on location or use, including potential incompatibility with other materials,

d) instructions on the operation and maintenance of the component.

7.3 Vertical supports

Vertical supports shall meet the requirements of this standard, EN 12767 and be clearly and durably marked with the information specified in 7.1.1.

NOTE This does not require welding the information on to the posts.

7.4 Luminaires

7.4.1 External lighting luminaires shall be clearly and durably marked with the information specified in 7.1.1 and also with the appropriate electrical safety markings which shall be on the outside of the housings.

7.4.2 For each standard luminaire the manufacturer shall provide a structural calculation to prove compliance with the relevant requirements of this standard. The manufacturer shall also provide a luminance intensity distribution (expressed in candelas) to prove compliance with the other relevant requirements of this standard.

7.5 Transilluminated signs

7.5.1 Transilluminated signs shall be clearly and durably marked with the information specified in 7.1.1 and also with the appropriate electrical safety markings which shall be on the outside of the housings.

7.5.2 For each transilluminated sign the manufacturer shall provide a structural calculation. For all illuminated signs the manufacturer shall provide a luminance distribution (expressed in $cd \cdot m^{-2}$) to prove compliance with the relevant requirements of this standard.

Annex A
(informative)

Tests for structural properties

A.1 General

In some cases it may be necessary to carry out testing to assist design calculations.

Planning, execution, evaluation and documentation should be in accordance with the following recommendations.

A.2 Planning of tests

The planned tests should be based on tentative calculation models, which may be incomplete, but which relate to several variables in the structural behaviour under consideration, so that the basic characteristics are adequately predicted. When the prediction resulting from the calculation models or failure modes is doubtful compared to that anticipated in the test, a test plan should be developed on the basis of pilot tests. The test plan should be drawn up by the manufacturer/designer and the testing organisation. The plan should comprise the objective of the test, instructions and specifications necessary for the selection or production of test specimens, the execution of the tests and, the test evaluation. The test plan should include the following items :

— scope of information required from the test ;

— description of all properties of the members concerned which may influence the behaviour at limit state ;

— description of the actions to which the members react and exhibit the properties referred to ;

— specification of the loading and environmental conditions in the test ;

— modes of failure and calculation models with the corresponding variables ;

— testing arrangements (including measures to ensure sufficient strength and stiffness of the loading and supporting rigs and clearance for deflection etc.) ;

— determination of the observation points and methods for observation and recording ;

— determination of the type and control of load application (stress controlled, strain controlled etc.) ;

— required accuracy of measurements and measuring devices ;

— details of the sampling and manufacturing of the test specimens.

Measurements should be carried out on these test specimens before commencement of testing in order to demonstrate that the test plan is proved, otherwise it should be revised.

A.3 Execution of tests

The performance of experimental assessments should be conducted by qualified staff experienced in the planning, execution and evaluation of the tests. The testing organisation should ensure careful management and documentation of all tests.

A.4 Test evaluation

The test evaluation should take account of the random character of all data.

A.5 Documentation

The test report should comprise

— the test plan (including any revisions) ;

— description and specifications for all test specimens ;

— details of execution of the tests ;

— the test results which are necessary for the test evaluation.

Annex B
(informative)

Example of structural calculation based on allowable deflections

B.1 Codes of practice

This calculation example is based on the relevant Eurocodes, which at this time only exist as ENV-codes.

References to specific clauses in Eurocode No. 1 (ENV 1991-2-4:1995) and No. 3 (ENV1993-1-1:1992) are given in square brackets e.g. [EC1:2.2.1] or [EC3:2.2.1] respectively.

In this example of calculation the same symbols and abbreviations are used as prescribed in Eurocode No. 1 and No. 3.

B.2 Wind Loads

Eurocode No. 1 (ENV 1991-2-4:1995) applies for calculating the wind load.

The wind load can be estimated from the basic value of the reference wind velocity, $v_{ref,0}$, for the location area (see Figure 7.2: European wind map in [EC1]). The different terrain categories is given in [EC1:8.3] and is as follows :

Category I — Rough open sea, lakes with at least 5 km fetch upwind and smooth flat country without obstacles (k_T = 0,17, z_0 = 0,01 m, z_{min} = 2 m).

Category II — Farmland with boundary hedges, occasional small farm structures, houses or trees (k_T = 0,19, z_0 = 0,05 m, z_{min} = 4 m).

Category III — Suburban or industrial areas and permanent forests (k_T = 0,22, z_0 = 0,3 m, z_{min} = 8 m).

Category IV — Urban areas in which at least 15 % of the surface is covered with buildings and their average height exceed 15 m (k_T = 0,24, z_0 = 1 m, z_{min} = 16 m).

The reference wind velocity, vref, shall be determined from :

$$v_{ref} = c_{DIR} \times c_{TEM} \times c_{ALT} \times v_{ref,0} \text{ [EC1:7.2]}$$

where

c_{DIR} is a direction factor to be taken as 1,0 unless otherwise specified in annex C [EC1] ;

c_{TEM} is a temporary (seasonal) factor taken as 1,0 unless otherwise specified in annex A [EC1] ;

c_{ALT} is a altitude factor be taken as 1,0 unless otherwise specified in annex C [EC1].

The acting wind load (quasi-static gust load) can be calculated as $w_e = q_{ref} \times c_e(z) \times cp$

where

g is a peak factor and

$$c_e(z) = c_r^2(z) \times c_t^2(z) \times [1 + 2g \times l_v(z)] [EC1:8.4]$$

$I_v(z)$ is the turbulence intensity, given by :

$$I_v(z) = \frac{k_T}{c_r(z) \times c_t(z)}$$

Corresponding to a peak factor g = 1,5 [EC1:8.4] gives :

$$c_e(z) = c_r^2(z) \times c_t^2(z) \times \left(1 + \frac{3 \times k_T}{c_r(z) \times c_t(z)}\right)$$

$c_r(z)$ is a roughness coefficient :

$c_r(z) = k_T \times \ln \frac{z}{z_0}$ for $z_{\min} \le z \le 200$

$c_r(z) = c_r(z_{\min})$ for $z < z_{\min}$

$c_t(z)$ is a topography coefficient :

$c_t(z)$ = 1	for	ϕ < 0,05
$c_t(z)$ = 1 + 2 × s ×ϕ	for	0,05 < ϕ < 0,3
$c_t(z)$ = 1 + 0,6 × s	for	ϕ > 0,3

cp is a pressure coefficient obtained from section 10 in [EC1]

ϕ is the upwind slope H/L in the wind direction [EC1: Figures 8.1 and 8.2]

For flat terrain ($c_t(z)$ = 1) the wind load on the individual structure members can be calculated as :

$$W_e = \frac{p}{2} \times V_{ref}{}^2 \times k_T{}^2 \times \ln \frac{z}{z_0} \times \left(\ln \frac{z}{z_0} + 3\right) \times C$$

where ρ is the density (1,25 kg/m^3), k_T is the terrain factor, z is the reference height to the structure, z_0 is the roughness length.

To simplify the calculation and marking the acting wind loads, w_{sign}, on the sign *exclusive the pressure coefficient* c_p is divided into the 8 classes shown in Table B.1 :

Table B.1 — Wind load classes and load range

w_{sign} is exclusive the pressure coefficient c_p

Class	w_{sign} (N/m^2)	
	Fixed values	**Range**
WL0	No performance determined	-
WL1	400	0 to 400
WL2	600	401 to 600
WL3	800	601 to 800
WL4	1 000	801 to 1 000
WL5	1 200	1 001 to 1 200
WL6	1 400	1 201 to 1 400
WL7	1 600	1 401 to 1 600

B.3 Design Basis

In this example a cantilevered sign is chosen. The sign is shown in Figure B.1.

Dimensions in millimetres

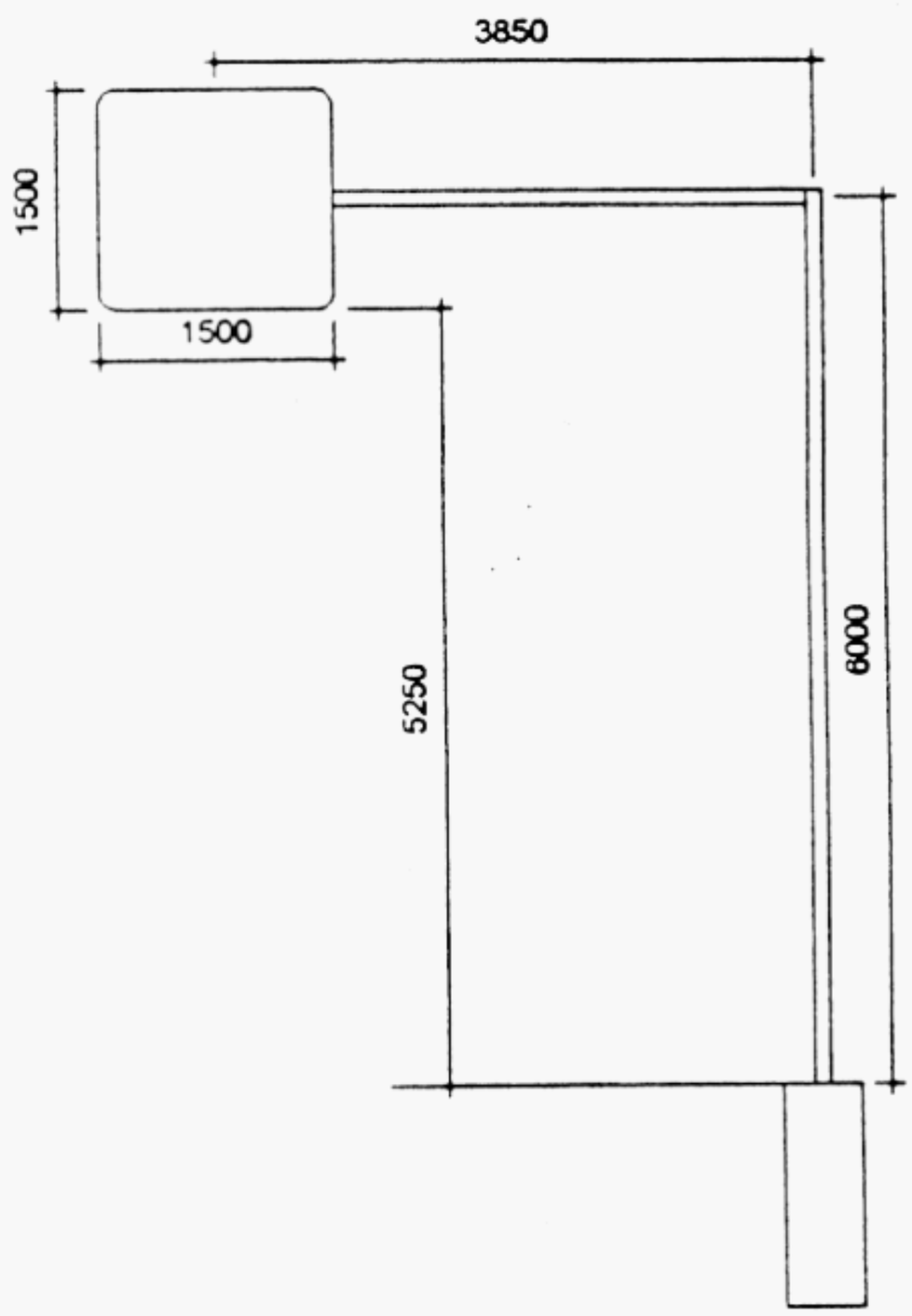

Figure B.1 — Cantilevered sign

The message on the sign face gives the size of the substrate as :

— height h = 1,50 m ;

— width w = 1,50 m.

For safety reasons the sign face is raised 5,25 m above the carriageway and cantilevered from a single vertical post.

- The height to the top of the sign can be calculated as z = 6,75 m ;
- the signpost is of steel and the substrate is of aluminium ;
- farmland with boundary hedges, occasional small farm structures, houses or trees (category II) ;
- the reference wind velocity for the area is anticipated to be 21 m/s ;
- v_{ref} = 21 m/s and flat terrain, the wind load, w_{sign}, can be calculated to 465 N/mm^2 which indicate class WL2, equivalent to 600 N/m^2 is be used for calculation ;
- the total mass of the sign is estimated to 120 kg ;
- the point load class is set to PL3, equivalent to 0,5 kN ;
- the dynamic snow load class is set to DSL0, equivalent to no requirement ;
- the temporary deflection bending class is set to TDB4, equivalent to 25 mm/m for the cantilever and the post ;
- the temporary deflection torsion class is set to TDT5, equivalent to 0,57 °/m for the cantilever and for the post ;
- the allowable permanent deflection is 20 % of the specified temporary deflections.

B.4 Calculation

B.4.1 Aerodynamic coefficients

The force coefficient for the sign face is according to [EC1:10.4.4] cf = 2,5 × ψ_λ where ψ_λ is the slender reduction factor for the sign face. The reduction factor according to [EC1:10.14] can be calculated to ψ_λ = 0,6.

$$C_{f(\text{sign face})} = 2{,}5 \times 0{,}6 = 1{,}5$$

The force coefficient for the cantilever arm and the post is according to [EC1:10.5] given as

$$c_f = c_{fo} \times \psi r \times \psi_\lambda$$

For the cantilever arm and the post c_{fo} and ψr can be calculated to c_{fo} = 2,1 and ψr = 0,9 (for rectangular hollow section with rounded corners).

According to [EC1:10.14] $\psi_{\lambda\ (cant)}$ = 0,85 and $\psi_{\lambda\ (post)}$ = 0,90. The force coefficient can now be calculated to :

$$c_{f\ (cant)} = 2{,}1 \times 0{,}9 \times 0{,}85 = 1{,}61$$

$$c_{f(post)} = 2{,}1 \times 0{,}9 \times 0{,}90 = 1{,}70$$

The uniform distributed wind load acting on the sign face is :

$W_{(sign\ face)}$ = WL2 × $c_{f(sign\ face)}$ = 600 × 1,5 = 900 N/m^2

The uniform distributed wind load acting on the cantilever arm is :

$W_{(cant)}$ = WL2 × $c_{f(cant)}$ = 600 × 1,61 = 966 N/m^2

The uniform distributed wind load acting on the post is :

$W_{(post)}$ = WL2 × $c_{f(post)}$ = 600 × 1,70 = 1 020 N/m^2

B.4.2 Safety coefficients

Eurocode No. 3 (ENV 1993-1-1:1992) applies to the steel construction (sign post and cantilever arms).

The partial safety factors for materials γ_M are be in accordance with [EC3:5.1.1] resistance of class 1, 2 or 3 cross section γ_{Mo} = 1,1.

In [EC3:2.3.3] the partial safety factors for actions γ_G and γ_Q are defined as :

— permanent actions favourable $\gamma_{G,\ inf}$ = 1,0 ;

— permanent actions unfavourable $\gamma_{G,\ sup}$ = 1,1 ;

— variable actions $\gamma_{Q,\ sup}$ = 1,35.

B.4.3 Material

In this example nominal steel grade S355JR is used for the cantilever arm and the post (fy = 355 MPa).

$$fyd = \frac{fy}{\lambda_{Mo}} = \frac{355}{1{,}1} = 323\,\text{MP}$$

The design value of yield strength is calculated as :

Modulus of elasticity E = 0,21 × 10^6 N/mm^2

Shearing modulus G = 0,081 × 10^6 N/mm^2

B.4.4 Calculation of sign face

B.4.4.1 Design load

The uniform distributed horizontal design load from the wind is calculated as :

$w'_{(sign\ face)}$ = $w_{(sign\ face)}$ × $\gamma_{Q,\ sup}$ = 900 × 1,35 = 1 215 N/m^2

This force is used to calculate the dimension of the sign plate, stiffeners, brackets etc..

B.4.4.2 Temporary deflection

The uniform distributed horizontal load from the wind for estimation of temporary deflections is calculated as :

$W''_{(substrate)}$ = $W_{(substrate)}$ × 0,75^2 = 900 × 0,56 = 504 N/m^2

(0,56 is the reduction factor for the wind load equivalent to 1-year mean return period).

This force is used to calculate the temporary deflections of the substrate, stiffeners, brackets etc..

B.4.4.3 Point load

The sign face must be designed to withstand a point load of 0,5 kN.

B.4.5 Calculation of cantilever arm

B.4.5.1 Technical data

A RHS 100 × 100 × 4,0 is anticipated for the cantilever arm.

Area of section A = 1,52 × 10^3 mm^2

Mass per metre g = 12,0 kg/m

Moment of inertia I = 2,81 × 10^6 mm^4

Elastic modulus W = 46,6 × 10^3 mm^3

B.4.5.2 Design load

Horizontal loads :

Substrate : $\Omega_{(substrate)}$ = 1 215 N/m^2

Cantilever arm : $\Omega_{(cant)} = \Omega_{(cant)} \times \gamma_{Q,\,sup}$ = 966 × 1,35 = 1 304 N/m^2

The maximum bending moment for the cantilever arm can be calculated as :

$$M_{max} = A_{(substrate)} \times W'_{(substrate)} \times L_1 + A_{(cant)} \times W'_{(cant)} \times L_2 = 2{,}25 \times 1\,215 \times 3{,}85 + 0{,}31 \times 1\,304 \times 1{,}55$$

$$M_{max} = 11{,}2 \text{ kNm}$$

$$\sigma_{\max} = \frac{M_{\max}}{W} = \frac{11{,}2 \times 10^6}{46{,}6 \times 10^3} = 239 \text{ N/mm}^2$$

Vertical loads :

Total weight of sign: $Q_{(sign)}$ = 120 kg

Total weight of cantilever arm : $Q_{(cant)}$ = 55,2 kg

The maximum bending moment for the cantilever arm can be calculated as :

$$M_{max} = Q_{(sign)} \times L_1 \times \gamma_{G,\,sup} + Q_{(cant)} \times L_3 \times \gamma_{G,\,sup} = 1\,200 \times 3{,}85 \times 1{,}1 + 552 \times 2{,}30 \times 1{,}1$$

$$M_{max} = 6{,}48 \text{ kNm}$$

$$\sigma_{\max} = \frac{M_{\max}}{W} = \frac{6{,}48 \times 10^6}{46{,}6 \times 10^3} = 139 \text{ N/mm}^2$$

Combination of horizontal and vertical load :

Moments [EC3:5.4.8.1 (11)] :

For bi-axial bending the following approximate criterion may be used :

$$\left(\frac{M_{y.Sd}}{M_{Ny.Rd}}\right)^{\alpha} = \left(\frac{M_{z.Sd}}{M_{Nz.Rd}}\right)^{\beta} \leq 1$$

This gives :

$$\left(\frac{239}{323}\right)^{1,66} + \left(\frac{139}{323}\right)^{1,66} = 0,85 \leq 1$$

The chosen profile is OK.

B.4.5.3 Temporary deflection analyse

Horizontal loads :

Substrate : $W''_{(substrate)}$ = 546 N/m^2

Cantilever arm : $W''_{(cant)} = W_{(cant)} \times 0,75^2 = 966 \times 0,56 = 543$ N/m^2

The maximum temporary deflection for the cantilever arm can be calculated as :

$$\text{Substrate}: u_{(\text{substrate})} = \frac{1}{3} \times \frac{Q \times L^3}{E \times I} = \frac{1}{3} \times \frac{1,5 \times 1,5 \times 504 \times 3\,850^3}{0,21 \times 10^6 \times 2,33 \times 10^6} = 44 \text{ mm equivalent to } 11,5 \text{ mm/m}$$

$$\text{Cantilever arm}: u_{(\text{cant})} = \frac{1}{8} \times \frac{q \times L^4}{E \times I} = \frac{1}{8} \times \frac{100 \times 543 \times 10^{-6} \times 3\,100^4}{0,21 \times 10^6 \times 2,33 \times 10^6} = 1,3 \text{ mm equivalent to } 0,4 \text{ mm/m}$$

Total horizontal deflection $u \approx u_{(substrate)} + u_{(cant)}$ = 45 mm equivalent to 12 mm/m < 25 mm/m (class TDB4).

B.4.5.4 Point load

The point load of 0,5 kN is far less than the wind load. No calculation is necessary.

B.4.6 Calculation of post

B.4.6.1 Technical data

A RHS 100 × 100 × 8,0 is anticipated for the post.

Area of section	$A = 2,91 \times 10^3$ mm^2
Mass pr. Meter	g = 22,9 kg/m
Moment of inertia	$I = 4,08 \times 10^6$ mm^4
Torsion constant	$J = 6,46 \times 10^6$ mm^4
Elastic modulus	$W = 81,5 \times 10^3$ mm^3

B.4.6.2 Design load

Horizontal loads :

Substrate : $W'_{(substrate)}$ = 1 215 N/m^2

Cantilever arm : $W'_{(cant)} = W_{(cant)} \times \gamma_{Q,\,sup}$ = 966 × 1,35 = 1 304 N/m^2

Post : $W'_{(post)} = W_{(post)} \times \gamma_{Q,\,sup}$ = 1 020 × 1,35 = 1 377 N/m^2

The maximum bending moment for the post can be calculated as :

$$M_{\max} = A_{(substrate)} \times W'_{(substrate)} \times L + A_{(cant)} \times W'_{(cant)} \times L + A_{(post)} \times W'_{(post)} \times L2$$

$$= 2{,}25 \times 1\,215 \times 6{,}00 + 0{,}31 \times 1\,304 \times 6{,}00 + 0{,}60 \times 1\,377 \times 3{,}00$$

$M_{\max}$ = 21,3 kNm

$$\sigma_{\max} = \frac{M_{\max}}{W} = \frac{21{,}3 \times 10^6}{81{,}5 \times 10^3} = 261\,\text{N/mm}^2$$

The maximum torsion moment for the post is the same as the bending moment for the cantilever arm :

M_{max} = 11,2 kNm

Vertical load :

The maximum bending moment for the post is the same as calculated for the cantilever arm :

$M_{\max}$ = 6,48 kNm

$$\sigma_{\max} = \frac{M_{\max}}{W} = \frac{6{,}48 \times 10^6}{81{,}5 \times 10^3} = 80\,\text{N/mm}^2$$

Combination of horizontal and vertical load :

Moments [EC3:5.4.8.1 (11)] :

For bi-axial bending the following approximate criterion may be used :

$$\left(\frac{M_{y.Sd}}{M_{Ny.Rd}}\right)^{\alpha} + \left(\frac{M_{z.Sd}}{M_{Nz.Rd}}\right)^{\beta} \leq 1$$

This gives :

$$\left(\frac{261}{323}\right)^{1{,}66} + \left(\frac{80}{323}\right)^{1{,}66} = 0{,}80 \leq 1$$

Torsion :

$$T = \frac{M \times r}{J} = \frac{11{,}2 \times 10^6 \times 50}{6{,}46 \times 10^6} = 67\,\text{N/mm}$$

Shear stress :

$$\Sigma Q = A_{(\text{substrate})} \times W'_{(\text{substrate})} + A_{(\text{cant})} \times W'_{(\text{cant})} + A_{(\text{post})} \times W'_{(\text{post})}$$

$$= 2{,}25 \times 1\,215 + 0{,}31 \times 1\,304 + 0{,}60 \times 1\,377 = 4{,}0 \text{ kN}$$

Total shear stress :

$$\Sigma\tau = 87 + 1 = 88 \text{ N/mm}^2$$

Because ΣT is less than $\frac{1}{2} \times f_{yd}$ = 162 MPa, the shear stress is neglected [EC3 : 5.4.9].

The chosen profile is OK.

B.4.6.3 Temporary deflection analyse

Horizontal loads :

Substrate : $W''_{(\text{substrate})} = 504 \text{ N/m}^2$

Cantilever arm : $W''_{(\text{cant})} = W_{(\text{cant})} \times 0{,}75^2 = 966 \times 0{,}56 = 541 \text{ N/m}^2$

Post : $W''_{(\text{post})} = W_{(\text{post})} \times 0{,}75^2 = 1\,020 \times 0{,}56 = 571 \text{ N/m}^2$

The maximum temporary deflection from bending of the post can be calculated as :

$$\text{Substrate}: u_{(\text{substrate})} = \frac{1}{3} \times \frac{Q \times L^3}{E \times I} = \frac{1}{3} \times \frac{1{,}5 \times 1{,}5 \times 504 \times 6\,000^3}{0{,}21 \times 10^6 \times 4{,}08 \times 10^6} = 95 \text{ mm equivalent to 16 mm/m}$$

$$\text{Cantilever arm}: u_{(\text{cant})} = \frac{1}{8} \times \frac{q \times L^3}{E \times I} = \frac{1}{3} \times \frac{0{,}1 \times 3{,}1 \times 541 \times 6\,000^3}{0{,}21 \times 10^6 \times 4{,}08 \times 10^6} = 14 \text{ mm equivalent to 2 mm/m}$$

$$\text{Post}: u_{(\text{post})} = \frac{1}{8} \times \frac{q \times L^4}{E \times I} = \frac{1}{8} \times \frac{100 \times 571 \times 10^{-6} \times 6\,000^4}{0{,}21 \times 10^6 \times 4{,}08 \times 10^6}$$

Total horizontal deflection $u \approx u_{(\text{substrate})} + u_{(\text{cant})} + u_{(\text{post})}$ = 120 mm equivalent to 20 mm/m < 25 mm/m (class TDB4).

The maximum temporary deflection from torsion of the post can be calculated as :

The maximum torsion moment for the post can be calculated as :

$$M_{\max} = A_{(\text{substrate})} \times W''_{(\text{substrate})} \times L_1 + A_{(\text{cant})} \times W''_{(\text{cant})} \times L_2 = 2{,}25 \times 504 \times 3{,}85 + 0{,}31 \times 541 \times 1{,}55$$

$$M_{\max} = 4{,}6 \text{ kNm}$$

$$\Theta = \frac{M \times L}{G \times J} = \frac{4{,}6 \times 10^6 \times 6\,000}{0{,}081 \times 10^6 \times 6{,}46 \times 10^6} = 0{,}053 \text{ radians} = 3{,}0°$$

equivalent to 0,50°/m < 0,57°/m (class TDT5).

B.4.6.4 Point load

The point load of 0,5 kN is far less than the wind load. No calculation is necessary.

B.5 Conclusion

A cantilevered sign (1,50 m × 1,50 m) mounted on a post (RHS 100 × 100 × 8,0) with the height of 6,00 m and a cantilever arm (RHS 100 × 100 × 4,0) with the length of 4,60 erected in terrain category II and reference wind velocity, v_{ref} = 21 m/s qualify for the code: WL2 – PL3 – DSL0 – TDB4 – TDT5.

There is no permanent deflection of the structure other than deflections created by the permanent actions.

Annex C
(normative)

Test points for horizontal and vertical loads

C.1 Wind load

C.1.1 Sign mounted symmetrically on a single post

Horizontally applied uniformly distributed load.

(Only wind load on substrate is shown).

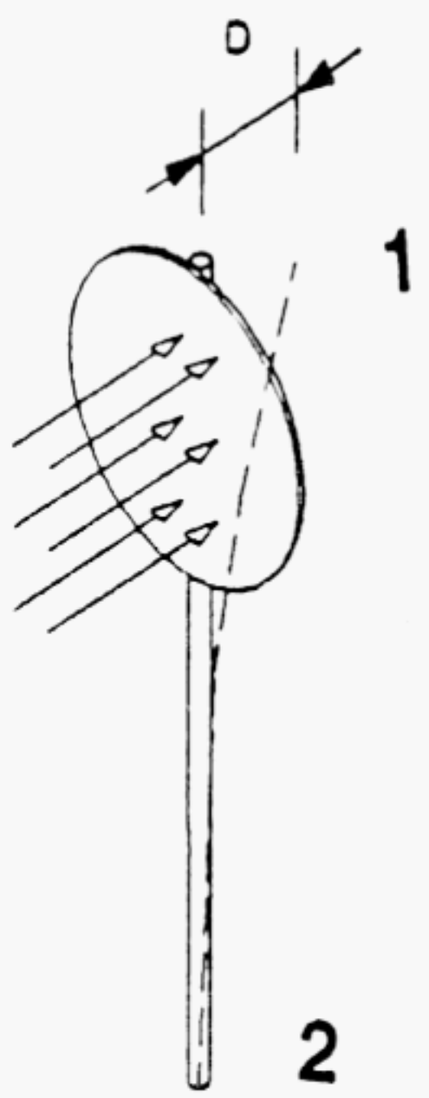

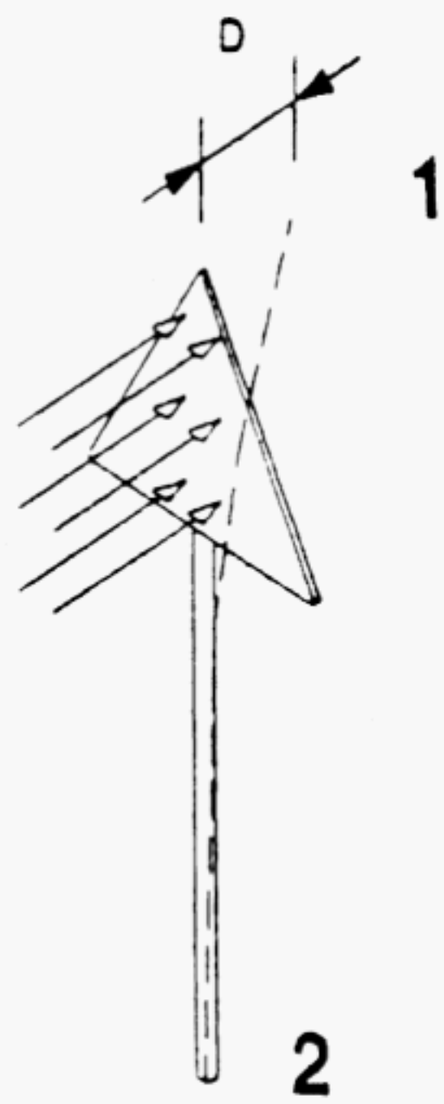

a) b)

Key

1 Deflection (D) of post
2 Isometric view

Figure C.1 — Deflection of post

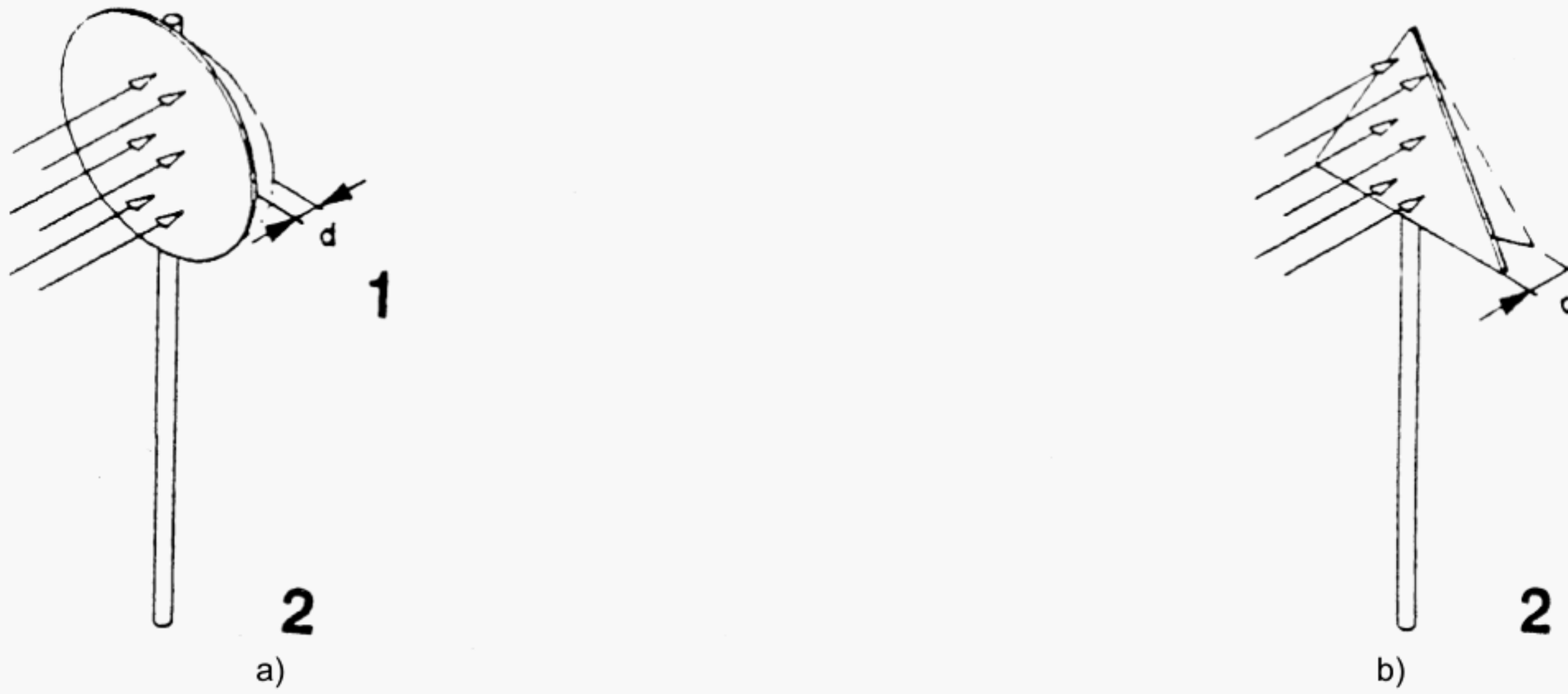

Key

1 Deflection (d) of substrate

2 Isometric view

Figure C.2 — Deflection of substrate

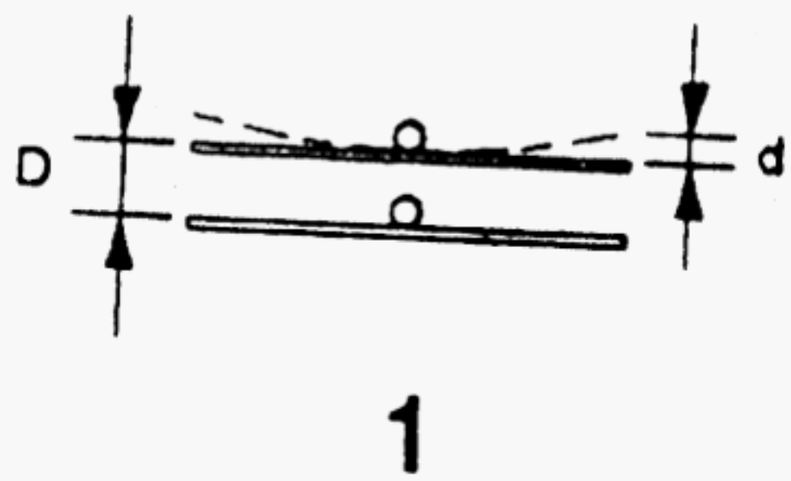

Key

1 Top view

Figure C.3 — Combined deflection of post and substrate

C.1.2 Sign mounted asymmetrically on a single post

Horizontally applied uniformly distributed load.

(Only wind load on substrate is shown).

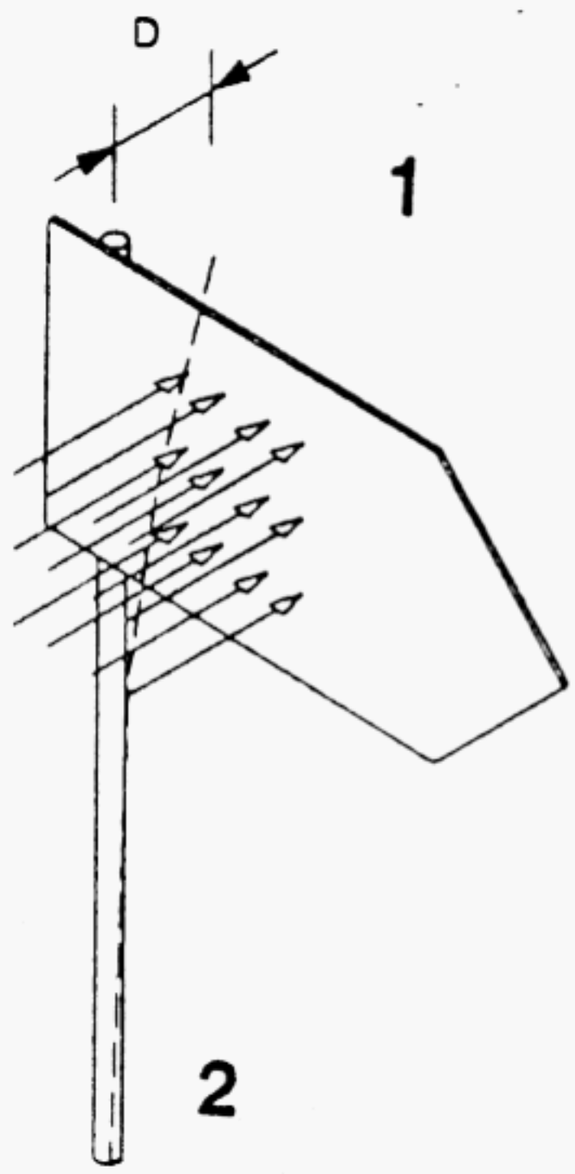

a)

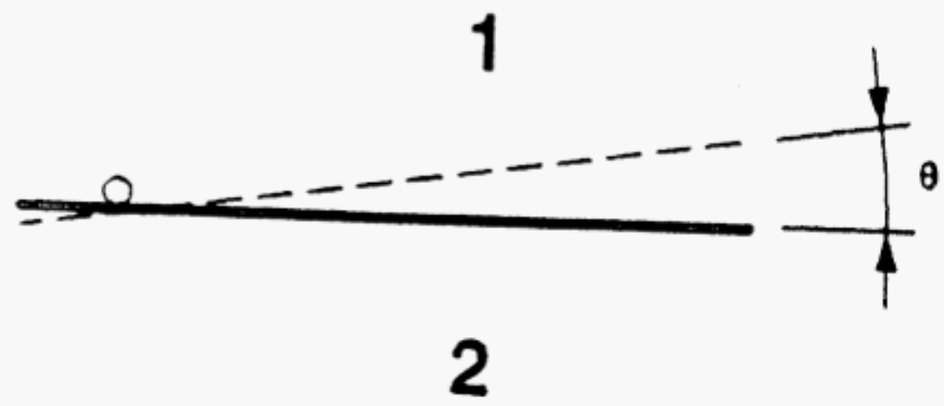

b)

Key

1 Bending (D) of post
2 Isometric view

Key

1 Rotation (θ) of post
2 Top of view

Figure C.4 — Deflection of post

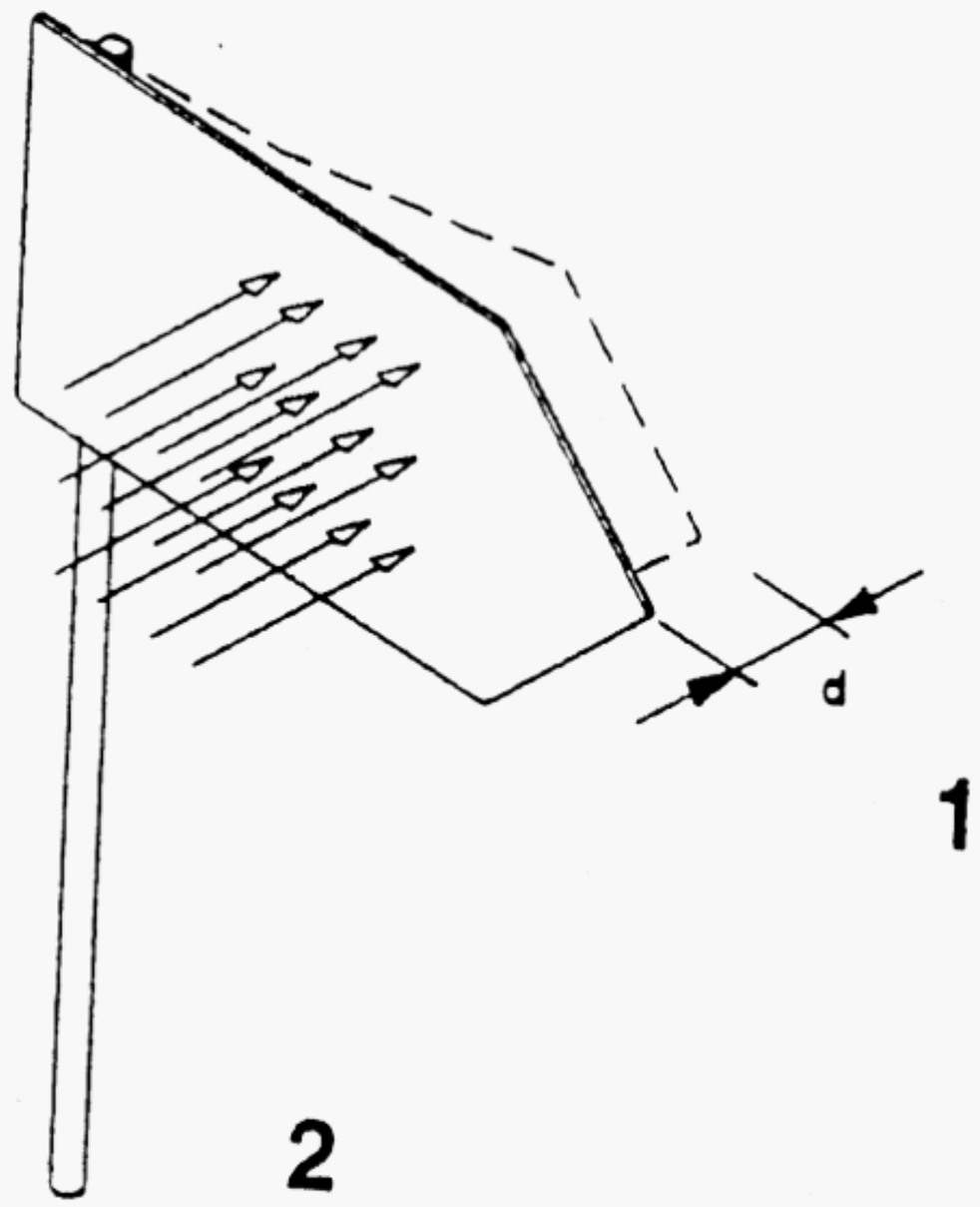

Key

1 Deflection (d) of substrate

2 Isometric view

Figure C.5 — Deflection of substrate

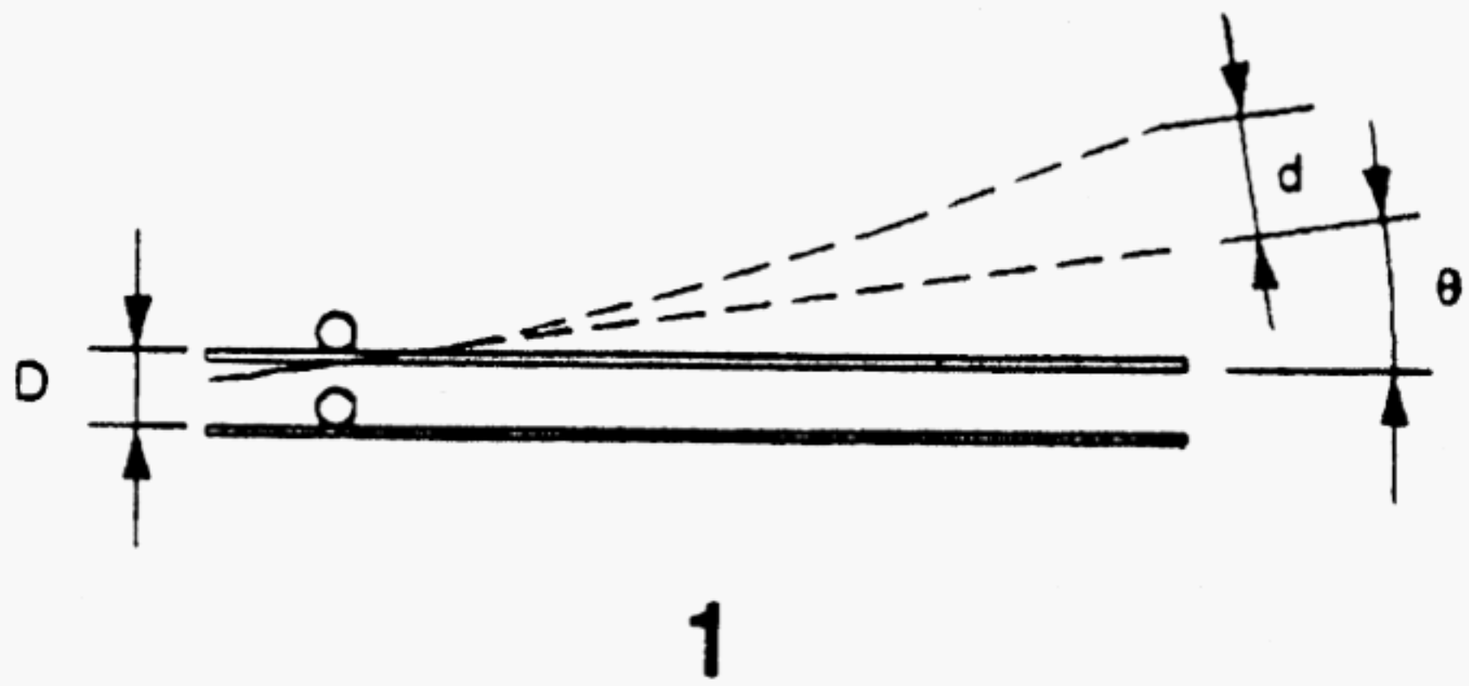

Key

1 Top view

Figure C.6 — Combined deflection of post and substrate

C.1.3 Sign mounted on two posts or more

Horizontally applied uniformly distributed load.

(Only wind load on substrate is shown).

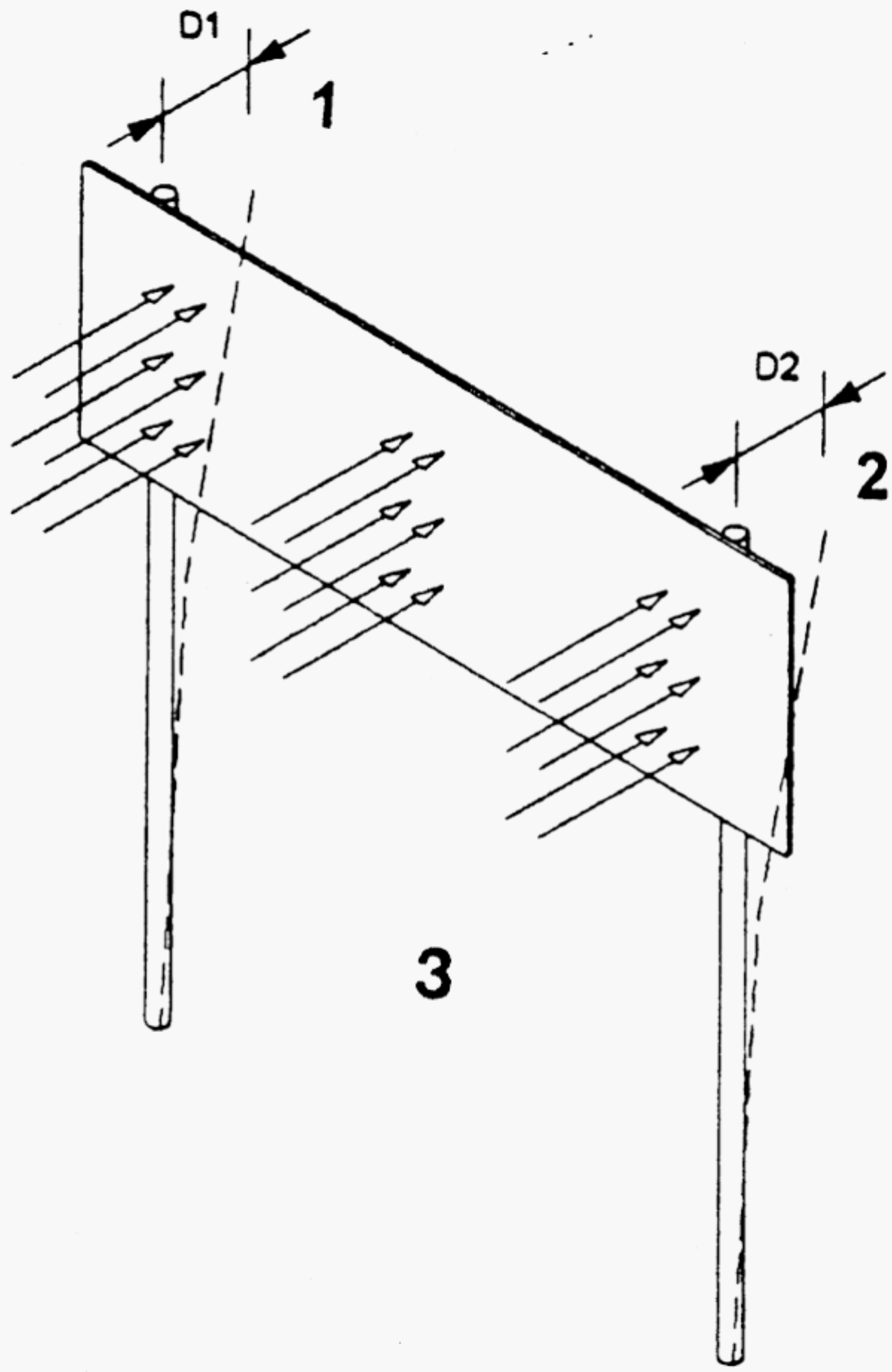

Key

1 Deflection (D1) of post

2 Deflection (D2) of post

3 Isometric view

Figure C.7 — Deflection of posts

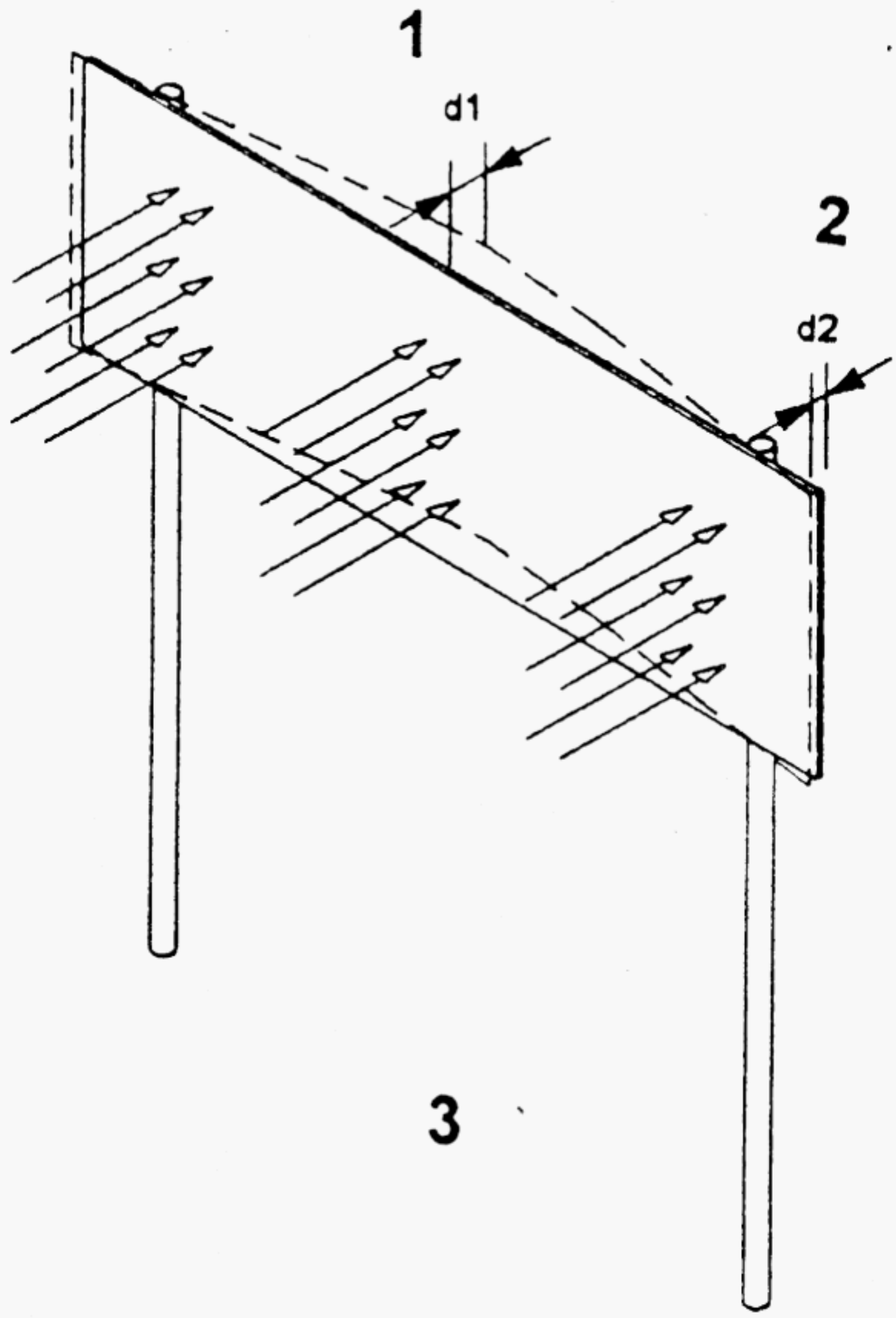

Key

1 Deflection (d1) of substrate

2 Deflection (d2) of substrate

3 Isometric view

Figure C.8 — Deflection of substrate

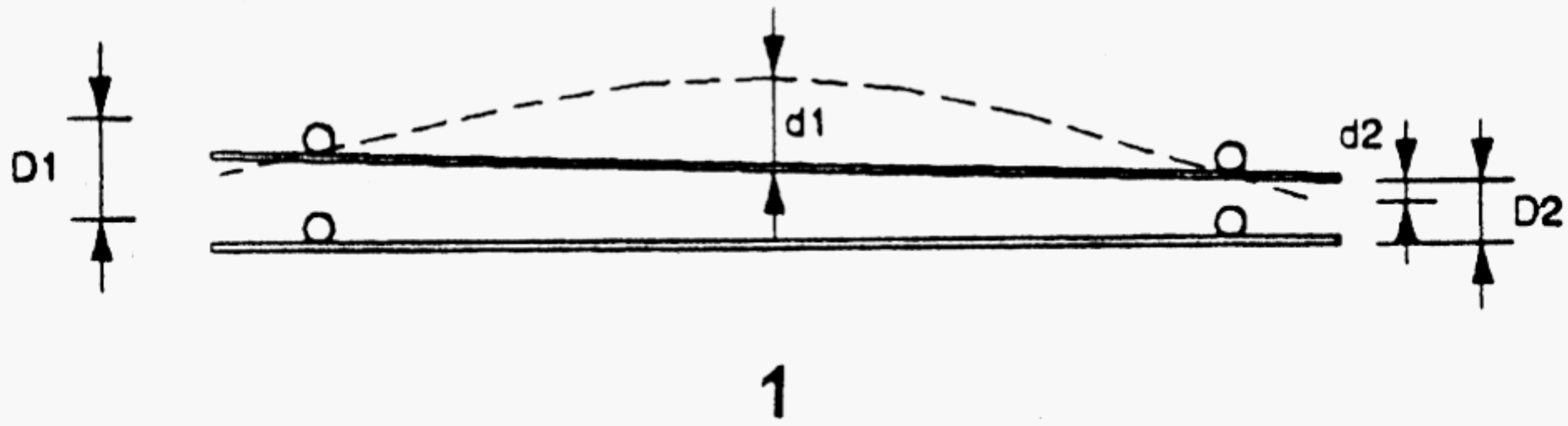

Key

1 Top view

Figure C.9 — Combined deflection of posts and substrate Point load

C.1.4 Sign mounted symmetrically on a single post

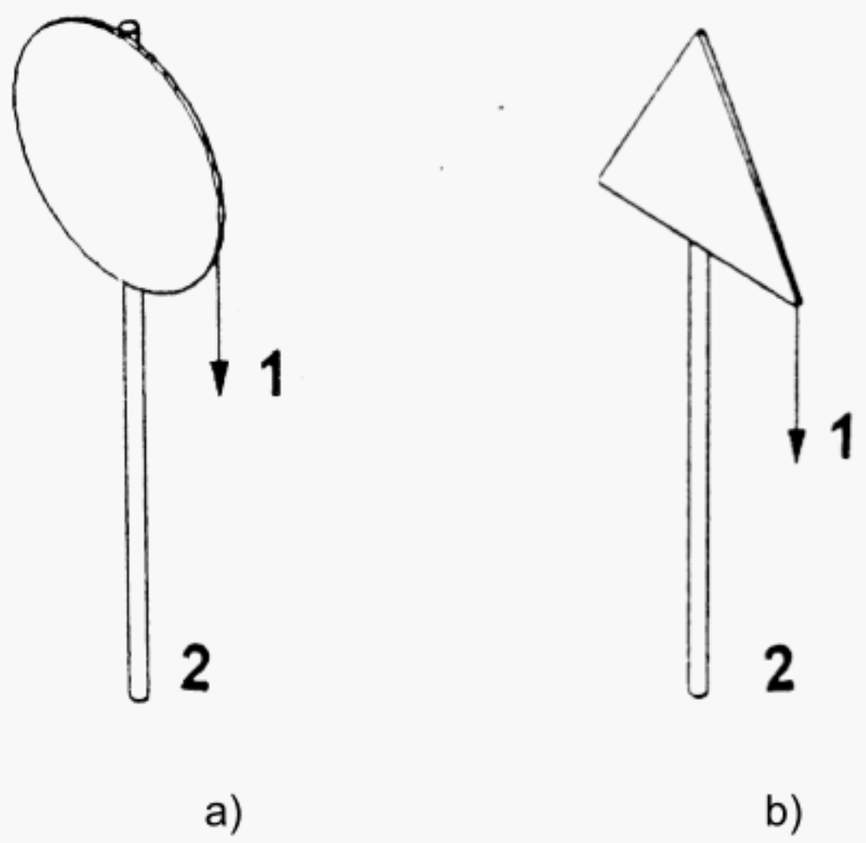

Key

1 Point load
2 Isometric view

Figure C.10 — Vertical load

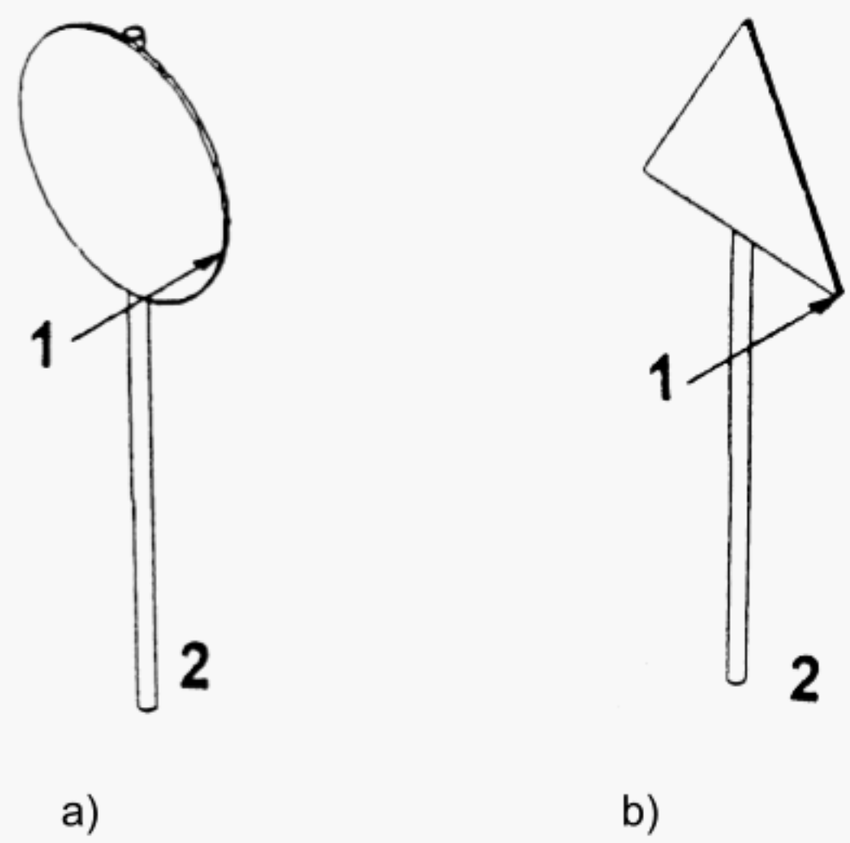

Key

1 Point load
2 Isometric view

Figure C.11 — Horizontal load

C.1.5 Sign mounded asymmetrically on a single post

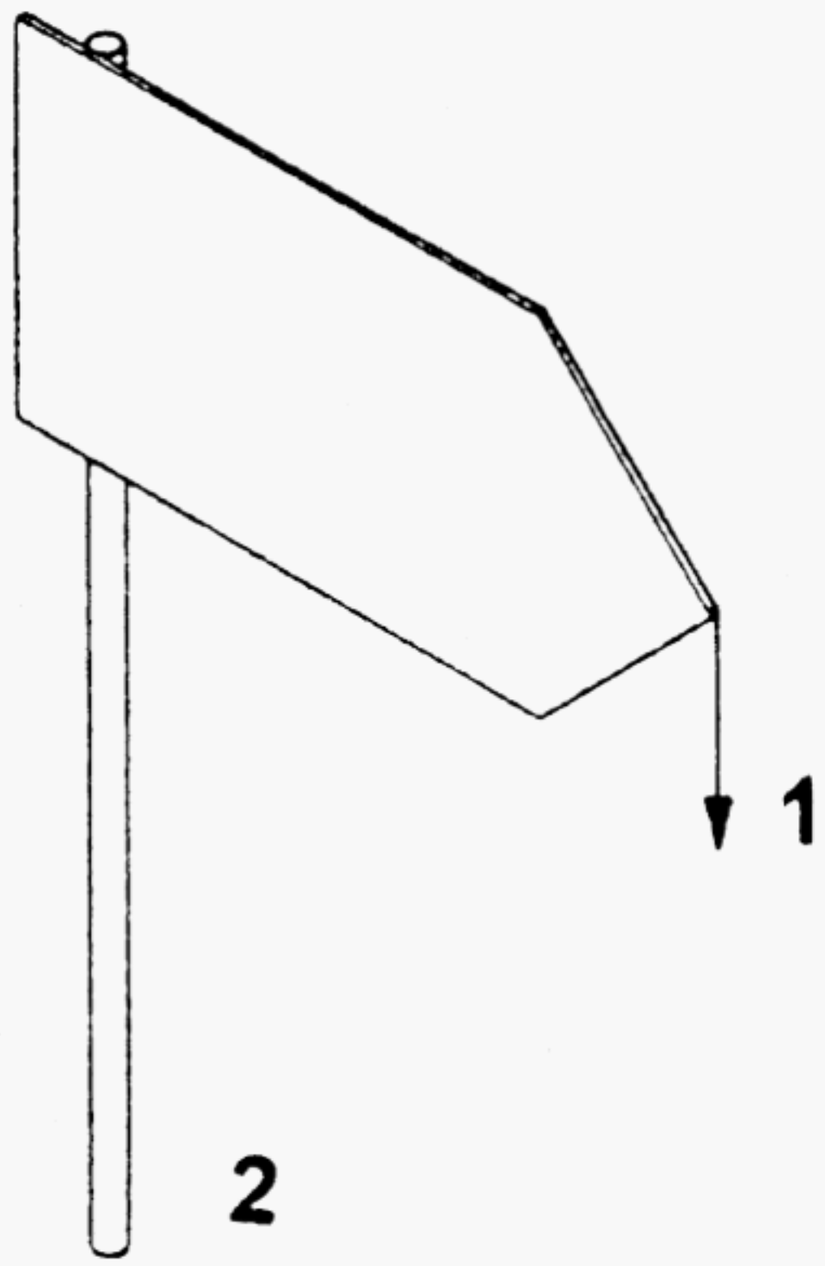

Key

1 Point load

2 Isometric view

Figure C.12 — Vertical load

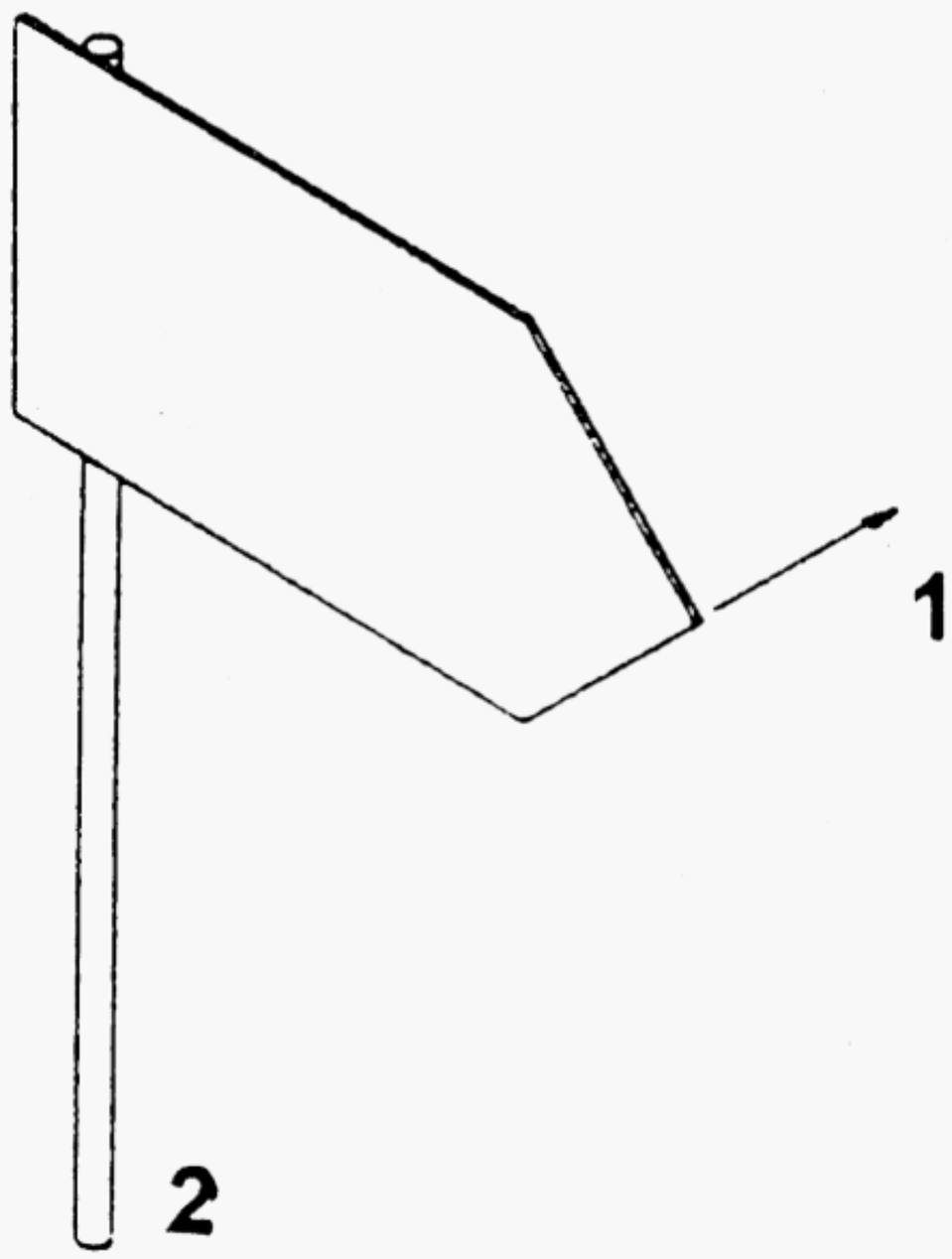

Key

1 Point load

2 Isometric view

Figure C.13 — Horizontal load

C.1.6 Sign mounted on two posts or more

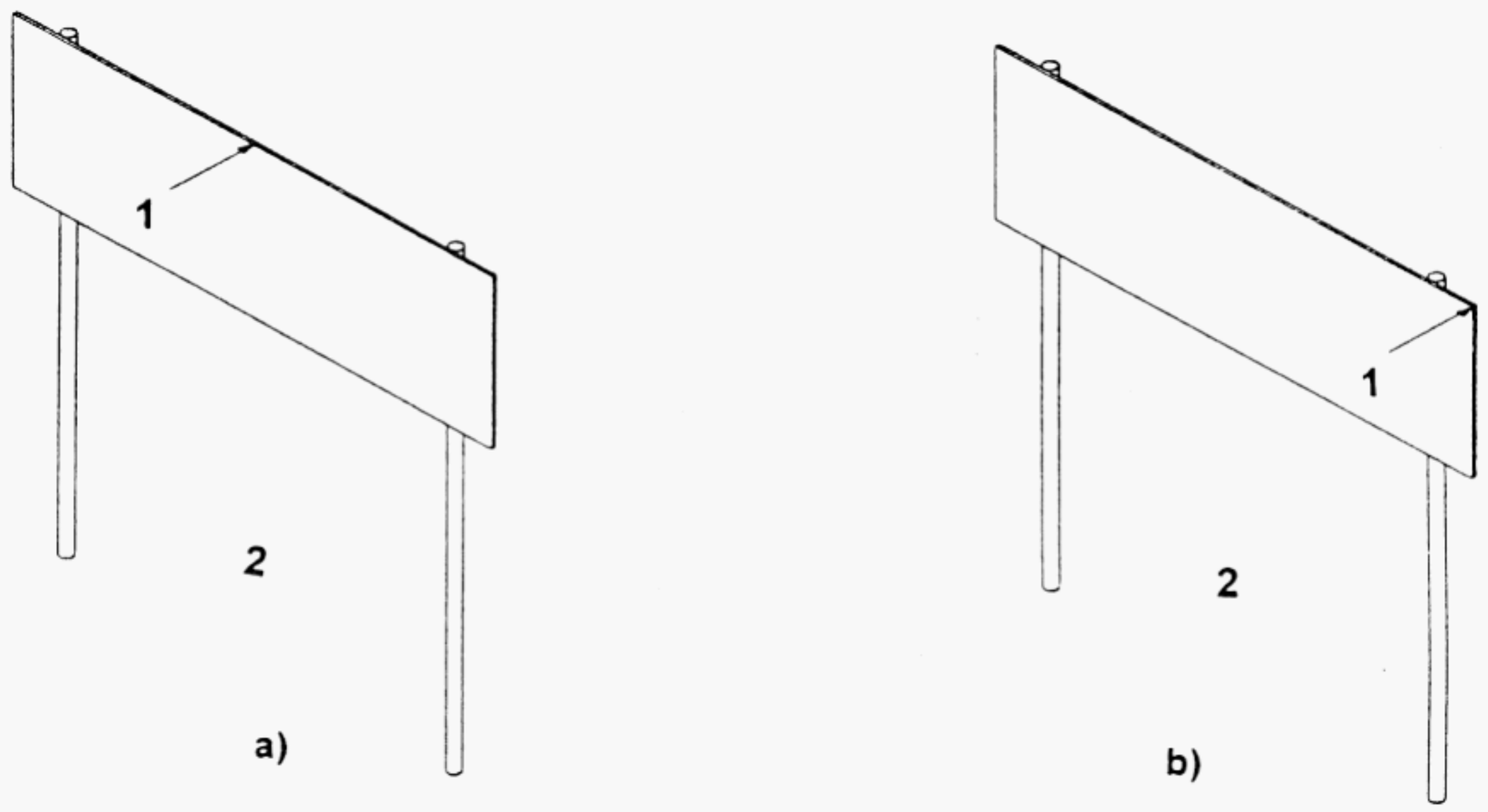

Key

1 Point load

2 Isometric view

Figure C.14 — Horizontal load

C.2 Snow clearance, dynamic load, load combination

C.2.1 Small signs mounted on a single post

Dimensions in millimetres

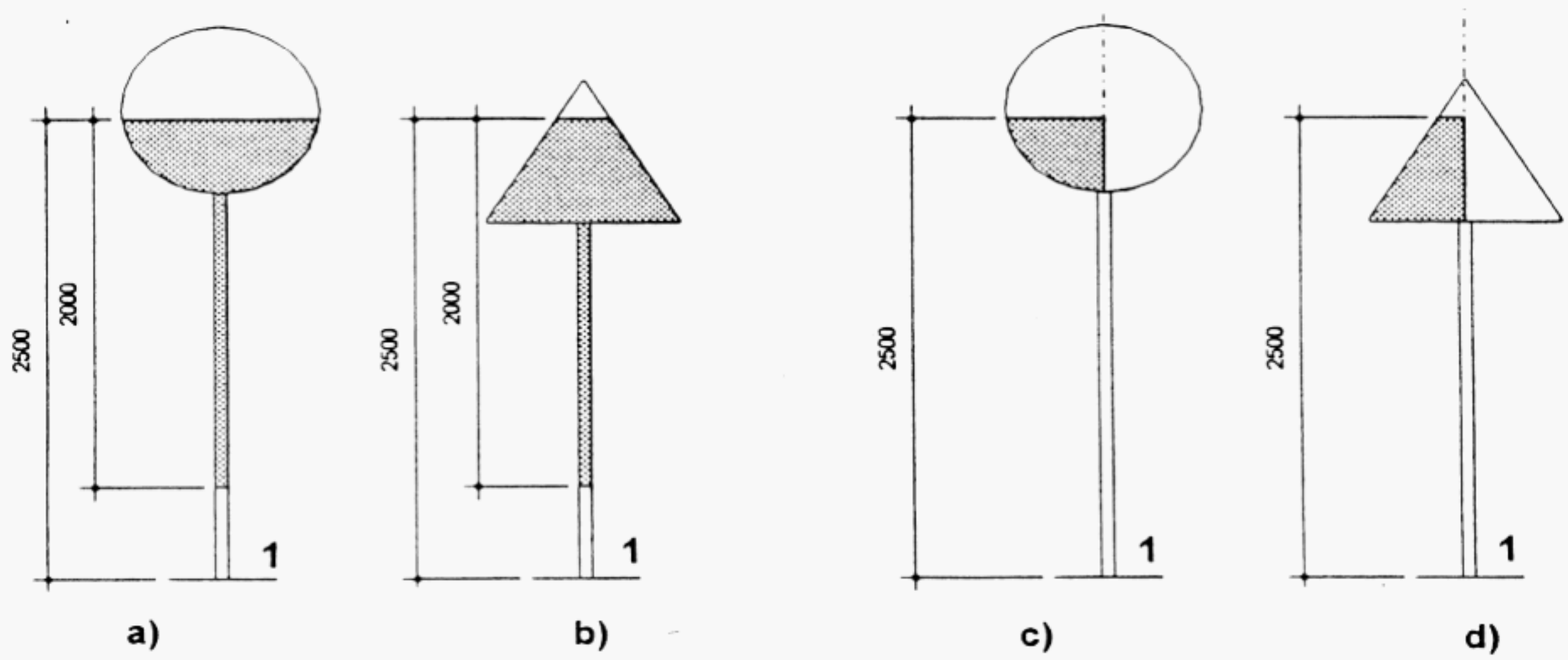

Key

1 Front view

Figure C.15 — Small signs mounted on a single post

C.2.2 Large sign mounted on a single post

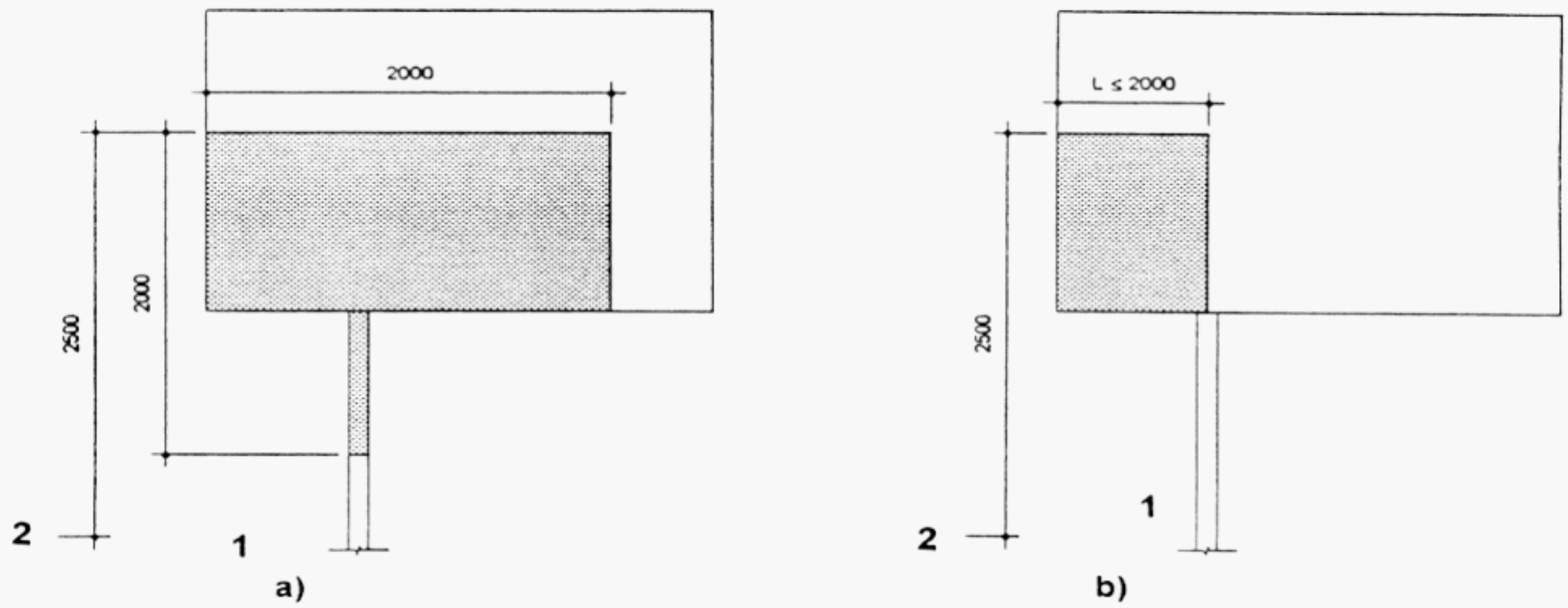

Key

1 Front view

2 Reference line (road surface)

Figure C.16 — Large sign mounted on a single post

C.2.3 Large signs mounted on two posts or more

Dimensions in millimetres

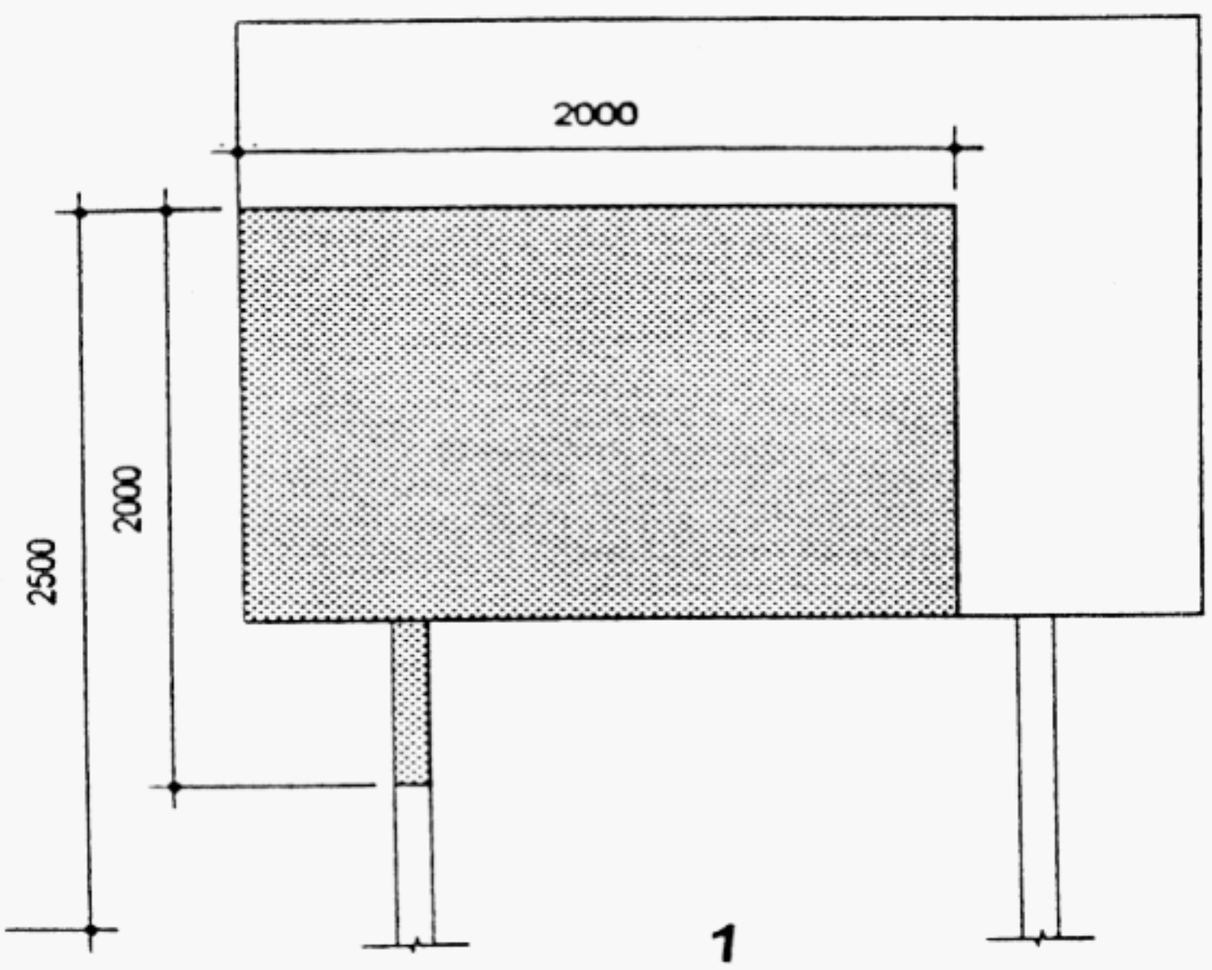

Key

1 Front view

2 Reference line (road surface)

Area exposed to snow load from snow clearance

Figure C.17 — Large signs mounted on two posts or more

National Annex NA (informative)
Recommendations for fixed traffic signs

NA.1 General

BS EN 12899-1:2001 has different performance classes for each property to enable purchasers in different Member States to select a performance class appropriate to the conditions in that State.

Recommended classes for visual and physical performance properties considered most suitable for UK practice are given in this National Annex.

It is the responsibility of the purchaser to specify which performance class is required. If a class is not given but the requirement to meet BS EN 12899-1 is specified, then manufacturers may supply the lowest level in the standard. This may not be suitable.

In some cases, as shown in Tables 10 and 11, the performance class comprises a range of values. A manufacturer can supply a product meeting the lowest value in that class and meet its requirements. Purchasers should be aware of this and ensure that they specify their requirements correctly.

NA.2 Fixed traffic signs

Recommended classes or values for visual and physical performance properties considered most suitable for UK practice are given in Tables NA.1 and NA.2.

Where no particular class is recommended the purchaser can choose any class.

Table NA.1 – Recommended classes or values for visual performance most suitable for UK practice

Property	Product	Location	Recommended performance classes or values taken from BS EN 12899-1:2001 except where indicated otherwise
Chromaticity	Glass bead material	All locations	Class R1, Table 5
	Non-retroreflective material	All locations	Class NR1, Table 3
	Non-retroreflective transilluminated sign face material	All locations	Table 7
Coefficient of retroreflection ($cd \cdot lx^{-1} \cdot m^{-2}$)	Glass bead material	Areas of low background luminance	Class Ref 1, Table 8
		Areas of high background luminance	Class Ref 2, Table 9
Mean luminance ($cd \cdot m^{-2}$)	Transilluminated signs	Areas of low background luminance	Not recommended
		Areas of medium background luminance	Class L1, Table 10
		Areas of high background luminance	Class L2, Table 10

Table NA.1 (continued) – Recommended classes or values for visual performance most suitable for UK practice

Property	Product	Location	Recommended performance classes or values taken from BS EN 12899-1:2001 except where indicated otherwise	
Uniformity of luminance	Transilluminated signs	For signs with an area not exceeding 1,5 m^2	Class U3, Table 12	
		For signs with an area exceeding 1,5 m^2 and with a height to width ratio less than 2:5	Class U2, Table 12	
		For signs with an area exceeding 1,5 m^2 and with a height to width ratio greater than 2:5	Class U1, Table 12	
Luminance of reference panel and Illuminance on sign face	Externally illuminated signs	Areas of low background luminance	Luminance of reference panel Illuminance on sign face	25 – 150 cd/m^2 92 lx – 554 lx
		Areas of medium background luminance	Luminance of reference panel Illuminance on sign face	100 – 350 cd/m^2 369 lx – 1293 lx
		Areas of high background luminance	Not recommended	

NOTE 1 An example of an area with high background luminance is a major shopping area with well-lit windows and fascias.
NOTE 2 Luminance values all relate to the white part of the sign.
NOTE 3 Externally illuminated signs should use retroreflective sign face material not lower than Class Ref 2, Table 9, to ensure adequate performance in the case of luminaire failure.
NOTE 4 The values for externally lit signs are those from BS 873-5, Categories 1 and 2 respectively.

Table NA.2 – Recommended classes or values for physical performance most suitable for UK practice

Property	Recommended performance class or value		
Wind load	**EITHER** design to BS EN 1991-1-4 using the 10 minute mean wind reference speed appropriate to the locality of the sign, taken from the national wind map and adjusted for altitude. If this is done then the eccentricity should be zero and the shape factor 1,8.		
	OR use the appropriate wind load class below, taken from Table 13, BS EN 12899-1:2001.		
	Country	**Class**	**Value kN·m^{-2}**
	England	WL6	1,4
	Northern Ireland and the Isle of Man	WL7	1,6
	Scotland [1)]	WL7	1,6
	Wales	WL6	1,4
	[1)] With the exception of Argyle & Bute, Highland, Moray, Orkney, Perth & Kinross, Shetland and the Western Isles where wind loads should be calculated for individual sites by application of BS EN 1991-1-4. NOTE 1 All the classes given in the above table apply up to a limiting altitude of 250 m above sea level (at ground level). Above this calculate the load using BS EN 1991-1-4 using the 10 minute mean wind reference speed appropriate to the locality of the sign, taken from the national wind map and adjusted for altitude. NOTE 2 The values in this table are based on a wind speed return period of 25 years. Road Authorities may specify a return period of 50 years, when designing signs to BS EN 1991-1-4. It is recommended that for very exposed sites, or sites subject to local funnelling effects, signs should be designed to BS EN 1991-1-4.		
Partial action factor	Dead loads	1,2	
	Wind and dynamic loads	1,35	
Partial material factors	Steel	1,05	
	Aluminium	1,15	
	Timber	1,35	
	Fibre reinforced polymer composite	1,5	
	Plastics	1,8	
	NOTE 1 the overall safety factor should be obtained by multiplying the partial action factor for loads and materials. NOTE 2 The values of partial action and partial material factors are taken from the revised draft (prEN) of 12899-1, which is in preparation. It is anticipated that this document will be published by the middle of 2007.		

Table NA.2 (continued) – Recommended classes or values of physical performance most suitable for UK practice

Property	**Recommended performance class**		
Point loads	Class PL3, Table 14,		
Dynamic snow loads	If snow blowers or snow ploughs are not regularly used	Class DSL0, Table 15	
	If snow blowers are regularly used	Class DSL1, Table 15	
	If snow ploughs are regularly used	Ploughing speed of 40 mph or less - Class DSL2, Table 15	
		Ploughing speed greater than 40 mph - Class DSL4, Table 15	
	NOTE 1 It is a Highway Authority decision whether to include snow loading in design by selecting a class other than DSL0. This will usually only be necessary in locations where there is considered to be a significant problem of damage to signs during snow clearing operations. NOTE 2 If snow blowers are correctly aligned while in use the load on the sign should be minimal.		
Temporary deflection of sign plates and supports	Use the appropriate temporary deflection bending class, and temporary deflection torsion class given in the table below.		
	Product	**Recommended performance class**	
		Bending class	Torsion class
	Sign plate	TDB4	N/A
	Support – not passively safe (Class 0 in BS EN 12767)	TDB4	TDT4
	Support – passively safe (compliant with a performance class from BS EN 12767)	TDB5	TDT4
	NOTE The deflection of the sign plates should be evaluated relative to the supports.		
Property	**Recommended performance class**		
Piercing of sign face	Class P3, Table 1, BS EN 12899-1:2001		
Edging of sign plates	Class E1, Table 2, BS EN 12899-1:2001		
Corrosion protection	Class SP1 or SP2, Table 18, BS EN 12899-1:2001		

NA.3 Sign support characteristics

Sign supports should be described in terms of material, cross-sectional shape and dimensions.

Where supports are supplied for stock, or where the conditions of use are not known at the time of manufacture of the supports, the support manufacturer should specify the size and wall thickness of the support and also supply information on the structural performance of the support, obtained by calculation or testing, to enable the structural performance of the complete assembly to be calculated, as follows:

maximum bending moment M_u (kNm)
stiffness for bending EI (kNm^2)
maximum moment for torsion T_u (kNm)
stiffness for torsion GI_t (kNm^2)

where

EI = modulus of elasticity x moment of inertia;
GI_t = shear modulus x torsion constant.

blank

BSI — British Standards Institution

BSI is the independent national body responsible for preparing British Standards. It presents the UK view on standards in Europe and at the international level. It is incorporated by Royal Charter.

Revisions

British Standards are updated by amendment or revision. Users of British Standards should make sure that they possess the latest amendments or editions.

It is the constant aim of BSI to improve the quality of our products and services. We would be grateful if anyone finding an inaccuracy or ambiguity while using this British Standard would inform the Secretary of the technical committee responsible, the identity of which can be found on the inside front cover. Tel: +44 (0)20 8996 9000. Fax: +44 (0)20 8996 7400.

BSI offers members an individual updating service called PLUS which ensures that subscribers automatically receive the latest editions of standards.

Buying standards

Orders for all BSI, international and foreign standards publications should be addressed to Customer Services. Tel: +44 (0)20 8996 9001. Fax: +44 (0)20 8996 7001. Email: orders@bsi-global.com. Standards are also available from the BSI website at http://www.bsi-global.com.

In response to orders for international standards, it is BSI policy to supply the BSI implementation of those that have been published as British Standards, unless otherwise requested.

Information on standards

BSI provides a wide range of information on national, European and international standards through its Library and its Technical Help to Exporters Service. Various BSI electronic information services are also available which give details on all its products and services. Contact the Information Centre. Tel: +44 (0)20 8996 7111. Fax: +44 (0)20 8996 7048. Email: info@bsi-global.com.

Subscribing members of BSI are kept up to date with standards developments and receive substantial discounts on the purchase price of standards. For details of these and other benefits contact Membership Administration. Tel: +44 (0)20 8996 7002. Fax: +44 (0)20 8996 7001. Email: membership@bsi-global.com.

Information regarding online access to British Standards via British Standards Online can be found at http://www.bsi-global.com/bsonline.

Further information about BSI is available on the BSI website at http://www.bsi-global.com.

Copyright

Copyright subsists in all BSI publications. BSI also holds the copyright, in the UK, of the publications of the international standardization bodies. Except as permitted under the Copyright, Designs and Patents Act 1988 no extract may be reproduced, stored in a retrieval system or transmitted in any form or by any means – electronic, photocopying, recording or otherwise – without prior written permission from BSI.

This does not preclude the free use, in the course of implementing the standard, of necessary details such as symbols, and size, type or grade designations. If these details are to be used for any other purpose than implementation then the prior written permission of BSI must be obtained.

Details and advice can be obtained from the Copyright & Licensing Manager. Tel: +44 (0)20 8996 7070. Fax: +44 (0)20 8996 7553. Email: copyright@bsi-global.com.

BSI

389 Chiswick High Road

London

W4 4AL