BRITISH STANDARD

BS EN 13443-1:2002

Incorporating amendment no. 1

Water conditioning equipment inside buildings — Mechanical filters —

Part 1: Particle rating 80 µm to 150 µm — Requirements for performances, safety and testing

The European Standard EN 13443-1:2002, incorporating amendment A1:2007, has the status of a British Standard

Confirmed November 2008

ICS 13.060.20; 91.140.60

NO COPYING WITHOUT BSI PERMISSION EXCEPT AS PERMITTED BY COPYRIGHT LAW

British Standards

National foreword

This British Standard is the UK implementation of EN 13443-1:2002, incorporating amendment A1:2007.

The UK participation in its preparation was entrusted by Technical Committee B/504, Water supply, to Subcommittee B/504/13, Domestic water treatment.

A list of organizations represented on this subcommittee can be obtained on request to its secretary.

This publication does not purport to include all the necessary provisions of a contract. Users are responsible for its correct application.

Compliance with a British Standard cannot confer immunity from legal obligations.

This British Standard was published under the authority of the Standards Policy and Strategy Committee on 3 February 2003

© BSI 2007

ISBN 978 0 580 60622 9

Amendments issued since publication

Amd. No.	Date	Comments
17458	30 November 2007	Implementation of CEN amendment A1:2007

EUROPEAN STANDARD

NORME EUROPÉENNE

EUROPÄISCHE NORM

EN 13443-1:2002+A1

September 2007

ICS 13.060.20; 91.140.60

Supersedes EN 13443-1:2002

English Version

Water conditioning equipment inside buildings - Mechanical filters - Part 1: Particle rating 80 µm to 150 µm - Requirements for performances, safety and testing

Appareils de traitement d'eau à l'intérieur des bâtiments - Filtres mécaniques - Partie 1: Particules de dimension comprise entre 80 µm et 150 µm - Exigences de performances et de sécurité, essais

Anlagen zur Behandlung von Trinkwasser innerhalb von Gebäuden - Mechanisch wirkende Filter - Teil 1: Filterfeinheit 80 µm bis 150 µm - Anforderungen an Ausführung, Sicherheit und Prüfung

This European Standard was approved by CEN on 23 October 2002 and includes Amendment 1 approved by CEN on 9 August 2007.

CEN members are bound to comply with the CEN/CENELEC Internal Regulations which stipulate the conditions for giving this European Standard the status of a national standard without any alteration. Up-to-date lists and bibliographical references concerning such national standards may be obtained on application to the CEN Management Centre or to any CEN member.

This European Standard exists in three official versions (English, French, German). A version in any other language made by translation under the responsibility of a CEN member into its own language and notified to the CEN Management Centre has the same status as the official versions.

CEN members are the national standards bodies of Austria, Belgium, Bulgaria, Cyprus, Czech Republic, Denmark, Estonia, Finland, France, Germany, Greece, Hungary, Iceland, Ireland, Italy, Latvia, Lithuania, Luxembourg, Malta, Netherlands, Norway, Poland, Portugal, Romania, Slovakia, Slovenia, Spain, Sweden, Switzerland and United Kingdom.

EUROPEAN COMMITTEE FOR STANDARDIZATION
COMITÉ EUROPÉEN DE NORMALISATION
EUROPÄISCHES KOMITEE FÜR NORMUNG

Management Centre: rue de Stassart, 36 B-1050 Brussels

© 2007 CEN All rights of exploitation in any form and by any means reserved worldwide for CEN national Members.

Ref. No. EN 13443-1:2002+A1:2007: E

Contents

page

Foreword 3

Introduction 4

1 **Scope** 5

2 **Normative references** 5

3 **Terms and definitions** 5

4 **Classification** 6

5 **A1 Materials (chemical and hygienic behaviour of materials) A1** 7

6 **General design requirements** 7

7 **Performances requirements** 8

8 **Performance tests** 8

9 **Technical documents, labelling and marking** 17

Annex A (informative) **Bibliographical information** 19

Annex B (normative) **A1 Installation, operation and maintenance** 22

Bibliography 26

Foreword

This document (EN 13443-1:2007+A1:2007) has been prepared by Technical Committee CEN/TC 164 “Water supply”, the secretariat of which is held by AFNOR.

This European Standard shall be given the status of a national standard, either by publication of an identical text or by endorsement, at the latest by March 2008, and conflicting national standards shall be withdrawn at the latest by March 2008.

This document supersedes EN 13443-1:2002.

This document includes Amendment 1, approved by CEN on 2007-08-09.

The start and finish of text introduced or altered by amendment is indicated in the text by tags ▌A1⟩ ⟨A1▌.

According to the CEN/CENELEC Internal Regulations, the national standards organizations of the following countries are bound to implement this European Standard: Austria, Belgium, Bulgaria, Cyprus, Czech Republic, Denmark, Estonia, Finland, France, Germany, Greece, Hungary, Iceland, Ireland, Italy, Latvia, Lithuania, Luxembourg, Malta, Netherlands, Norway, Poland, Portugal, Romania, Slovakia, Slovenia, Spain, Sweden, Switzerland and the United Kingdom.

Introduction

In respect of potential adverse effects on the quality of water intended for human consumption, caused by the product covered by this standard:

1) this standard provides no information as to whether the product may be used without restriction in any of the Member States of the EU or EFTA;

2) it should be noted that, while awaiting the adoption of verifiable European criteria, existing national regulations concerning the use and/or the characteristics of this product remain in force.

1 Scope

Part 1 of this European Standard applies to mechanical filters for drinking water installations inside buildings, of nominal size from DN 15 to DN 100, minimum nominal pressure PN10, particle rating of 80 µm to 150 µm, and ⟦A1⟩ maximum ⟨A1⟧ design temperature of 30 °C. It specifies requirements relating to the construction and mode of operation of filters and describes relevant methods of testing. It only concerns units which are permanently connected to the mains supply at the point of entry into the building.

Part 2 of this European Standard (⟦A1⟩ EN 13443-2:2005+A1 ⟨A1⟧) is a separate document and deals with filters with a particle size limit less than 80 µm.

2 Normative references

⟦A1⟩ The following referenced documents are indispensable for the application of this document. For dated references, only the edition cited applies. For undated references, the latest edition of the referenced document (including any amendments) applies. ⟨A1⟧

EN 1333, *Flanges and their joints - Pipework components - Definition and selection of PN*

EN 1567, *Building valves - Water pressure reducing valves and combination water pressure reducing valves - Requirements and tests*

EN 1717, *Protection against pollution of potable water in water installations and general requirements of devices to prevent pollution by backflow*

⟦A1⟩ EN 15161, *Water conditioning equipment inside buildings — Installation, operation, maintenance and repair* ⟨A1⟧

EN ISO 3822-3, *Acoustics - Laboratory tests on noise emission from appliances and equipment used in water supply installations - Part 3: Mounting and operating conditions for in-line valves and appliances (ISO 3822-3:1997)*

EN ISO 6509, *Corrosion of metals and alloys - Determination of dezincification resistance of brass (ISO 6509:1981)*

⟦A1⟩ *deleted text* ⟨A1⟧

⟦A1⟩ ISO 2591-1, *Test sieving — Part 1: Methods using test sieves of woven wire cloth and perforated metal plate*

ISO 9276-1, *Representation of results of particle size analysis — Part 1: Graphical representation*

ISO 13320-1, *Particle size analysis — Laser diffraction methods — Part 1: General principles* ⟨A1⟧

3 Terms and definitions

For the purposes of this European Standard, the following terms and definitions apply.

3.1
⟦A1⟩ drinking water ⟨A1⟧
water intended for human consumption as defined in Directive 98/83/EC ⟦A1⟩ (see Annex A) ⟨A1⟧

3.2
⟦A1⟩ mechanical filter ⟨A1⟧
⟦A1⟩ appliance ⟨A1⟧ designed to remove undissolved substances from water, down to a specified particle size

3.3
filter element
part of a filter designed to ensure the retention of particles

3.4
grade of filtration
ability of a filter to retain particles and suspended matter of a given size range irrespective of the nature of the material used in the filter element, defined by the maximum and minimum filter particle rating

3.5
minimum particle rating
number determining the particle size, in µm, of a material 90 % by mass of which is able to pass through the filter under test conditions

3.6
maximum particle rating
number determining the particle size, in µm, of a material 10 % by mass of which is able to pass through the filter under test conditions

3.7
filter surface velocity
flow rate divided by the filter surface area, expressed in $m^3/(h\ cm^2)$

3.8
nominal flow rate
clean filter flow rate at which either the pressure drop does not exceed a value of 50 kPa (0,5 bar), or the filter surface velocity does not exceed the maximum specified value, whichever is lower

4 Classification

4.1 Principle

Mechanical filters shall be designated by:

— nominal size DN;

— end connections;

— filter type;

— nominal pressure PN.

The designation shall be clearly identified on the manufacturer's rating plate or in the instruction manual. Examples are given in A1 Annex A A1.

4.2 Nominal size (DN)

The nominal size DN shall correspond to the flow rates in Table 2. The inlet connection of the filter may be DN or one size larger or one size smaller than the nominal size DN. In the case of flange connections the nominal size DN is determined by the DN of the inlet connection.

4.3 A1 End connections A1

Examples of end connections are shown in A1 Annex A A1. Combinations of two kinds of connections are possible.

4.4 A1 Filter type A1

Filters conforming to this standard shall be presented as one of the following types:

— filters requiring single use filter elements;

— backwashing filters filter elements cleaned by backwashing (without any dismantling).

4.5 A1 Nominal pressure (PN) A1

The nominal pressure PN shall correspond to EN 1333.

5 A1 Materials (chemical and hygienic behaviour of materials) A1

The selection of materials shall be the responsibility of the manufacturer, provided that the complete filter satisfies the requirements of EN 1567.

NOTE The materials and coatings used should not contaminate or change the drinking water, when in normal or accidental contact up to the maximum designed temperature.

The requirements , with regard to the effects of materials on drinking water quality, are specified in national regulations.

The manufacturer shall state in his technical literature what materials and coatings are used. The materials, in particular copper alloys, shall conform to relevant national standards or recommendations. These references shall be stated.

Copper-zinc alloys containing more than 10 % zinc are subject to dezincification when submitted to water capable of dezincification. In countries where the use of products made of dezincification resistant material is required, the product have to guarantee a dezincification depth less than 200 µm in any direction. They have to be tested and marked in accordance with EN ISO 6509 and have to be marked in compliance with the indications under clause 9 of the present standard.

6 General design requirements

6.1 Backwashable filters

Backwashable filters shall be able to be cleaned without the aid of tools. No substances shall be allowed to penetrate into the drinking water supply as a result of the cleaning operation. After completion of backwashing, the original grade of filtration and pressure drop shall be recovered.

Backwashable filters shall be provided with a backwash water outlet, conforming to EN 1717.

It shall be possible to clean the filter mounted in any of the positions specified by the manufacturer with no interruption of filtered water supply during backwashing.

6.2 Single-use filters

Single use filters shall be designed in such a way that the filter elements can be replaced without any risk of contamination of the drinking water. It shall be possible to replace the filter mounted in any of the positions specified by the manufacturer.

Any tools used in this process shall not come into contact with drinking water and shall be provided by the manufacturer. If specific tools are necessary they shall be supplied by the manufacturer.

Replacement filter elements shall be single packaged to prevent contamination from outside.

6.3 Thermal stability

Filters shall be designed to withstand room and water temperatures of at least 30°°C.

7 Performances requirements

7.1 A1 Bending strength of the body A1

When subjected to a bending moment in accordance with 8.2.1.2, there shall be no permanent deformation, fissures or ruptures.

7.2 A1 Pressure strength of the filter housing A1

When subjected to a hydraulic test as defined in 8.2.2, there shall be no visible leakage or permanent deformation.

7.3 A1 Pressure strength of the filter element A1

After being subjected to a differential pressure as described in 8.2.3.2, there shall be no visible deformation of the filter cartridge.

7.4 A1 Dynamic pressure test A1

While subject to cyclic pressure test as described in 8.2.4 the filter hosing shall show no visible signs of leakage or permanent deformation.

7.5 A1 Pressure drop A1

When subjected to the nominal flow rate as described in 8.3.1.2, the filter, with a clean element, shall not develop a pressure drop higher than 50 kPa.

7.6 A1 Filter surface velocity A1

The filter surface velocity shall not exceed 0,15 $m^3/(h\ cm^2)$ for backwashable filters and 0,025 $m^3/(h\ cm^2)$ for replaceable cartridge filters at the nominal flow rate.

7.7 A1 Filter rating A1

When tested in accordance with 8.4.2, the maximum filter rating shall be between 100 A1 µm A1 and 150 A1 µm A1 and the minimum filter rating shall be between 80 A1 µm A1 and 120 A1 µm A1.

8 Performance tests

8.1 A1 Test conditions A1

Tests shall be carried out with the filter in the horizontal position, except for special models. Unless otherwise specified tolerances shall be ± 5%. Unless otherwise stated tests shall be carried out at room temperature with water between 10 °C and 30 °C. If the designed water temperature is higher than 30 °C, the designed temperature shall be used for the test.

8.2 A1 Mechanical performance A1

8.2.1 Bending strength of the body

8.2.1.1 Principle

The mechanical bending strength of the body is tested by a bending moment test, in which a force is applied for a predetermined period.

8.2.1.2 A1 Test procedure A1

Fix the mechanical filter by one connection to a test apparatus as shown in Figure 1. Connect the other side to a metal tube and apply the appropriate force *F* in order to obtain the bending moment as given in Table 1.

Apply the bending moment for A1 30^{+10}_{0} *s*. A1

Table 1 — Nominal size vs. bending moment

Nominal size DN		15	20	25	32	40	50	65	80	100
Bending moment	Threaded and flanged ends	80	150	300	400	500	600	750	950	1300
(Nm)	Compression ends	50	85	125	160	200	300	-	-	-

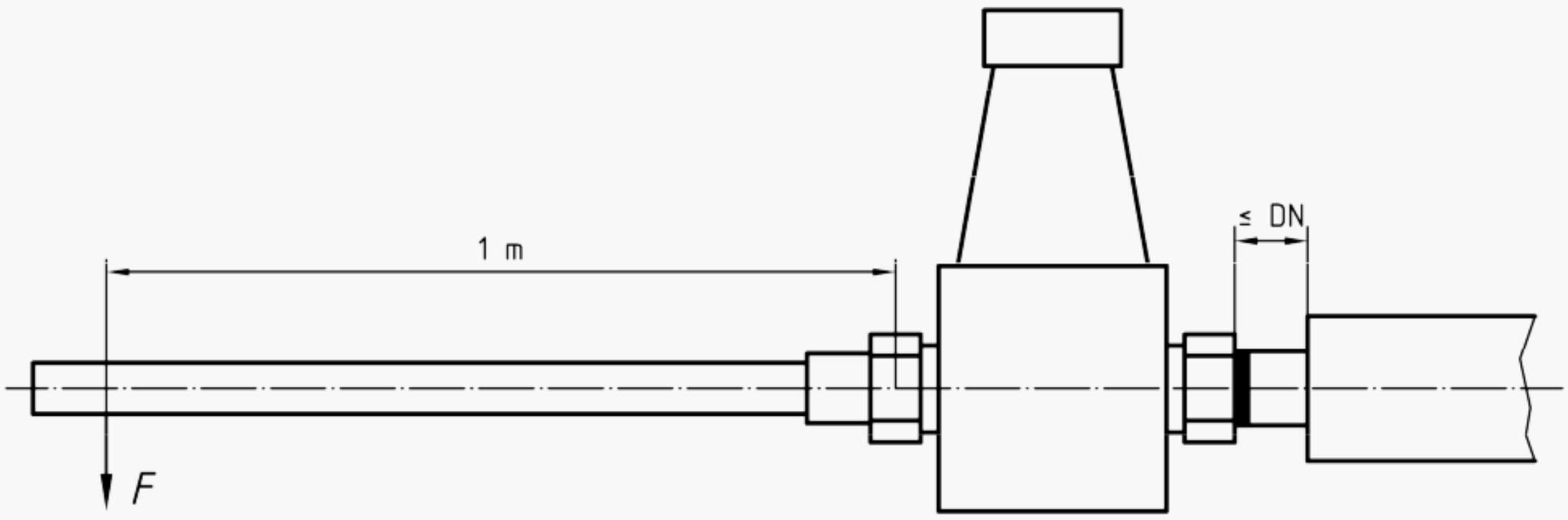

Figure 1 — Bending moment testing equipment

8.2.2 Static pressure strength and tightness of the filter

8.2.2.1 Principle

The pressure strength and water tightness of the filter shall be tested by applying a water pressure of 3 times the nominal pressure PN for a period of 10^{+2}_{0} min.

Those filter components which are subject to hydrostatic pressure shall be designed for a nominal pressure of not less than 1 000 kPa A1 *deleted text* A1. According to EN 1567, the filters combined with pressure regulating valves shall be designed at a nominal pressure of not less than 1 600 kPa A1 *deleted text* A1.

8.2.2.2 A1 Test procedure A1

Install the filter in a test rig as shown in Figure 2. Increase the pressure to 3 times the nominal pressure PN. Maintain the pressure for 10^{+2}_{0} min.

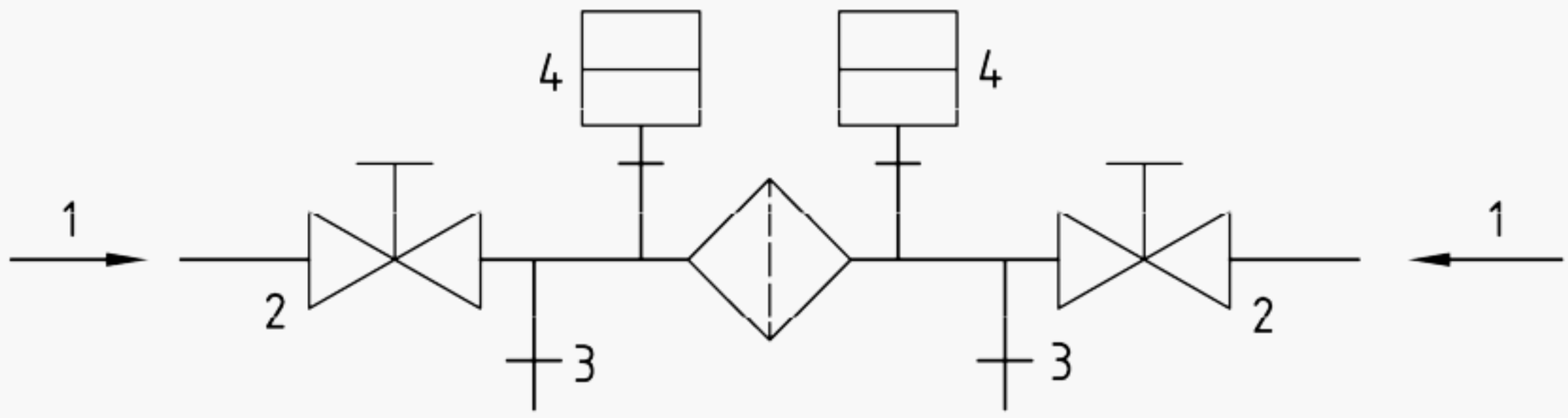

Key

1 Pressurizing device
2 Stop valve/ Solenoid valve
3 Drain valve
4 Pressure gauge

Figure 2 — Pressure strength and tightness testing equipment

8.2.3 Pressure strength of filter elements and components

8.2.3.1 Principle

Filter elements and components which are subject to differential pressure during normal operation shall be capable of withstanding a differential pressure equal to 80 % of the nominal pressure PN for 60 min.

8.2.3.2 A1 Test procedure A1

Install the filter in a test rig as shown in Figure 2. Prepare the filter elements and components under test so that they are subject to differential pressure. Increase the upstream pressure to 80 % of the nominal pressure PN with an open discharge. Maintain the pressure for A1 60^{+2}_{-1} min A1.

8.2.4 A1 Dynamic pressure test A1

8.2.4.1 Principle

The filter shall be capable of withstanding not less than 200 000 load cycles with a pressure cycling between 150 kPa A1 *deleted text* A1 and 1,3 times the nominal pressure PN, at a frequency of A1 15^{+2}_{-1} A1 times per minute.

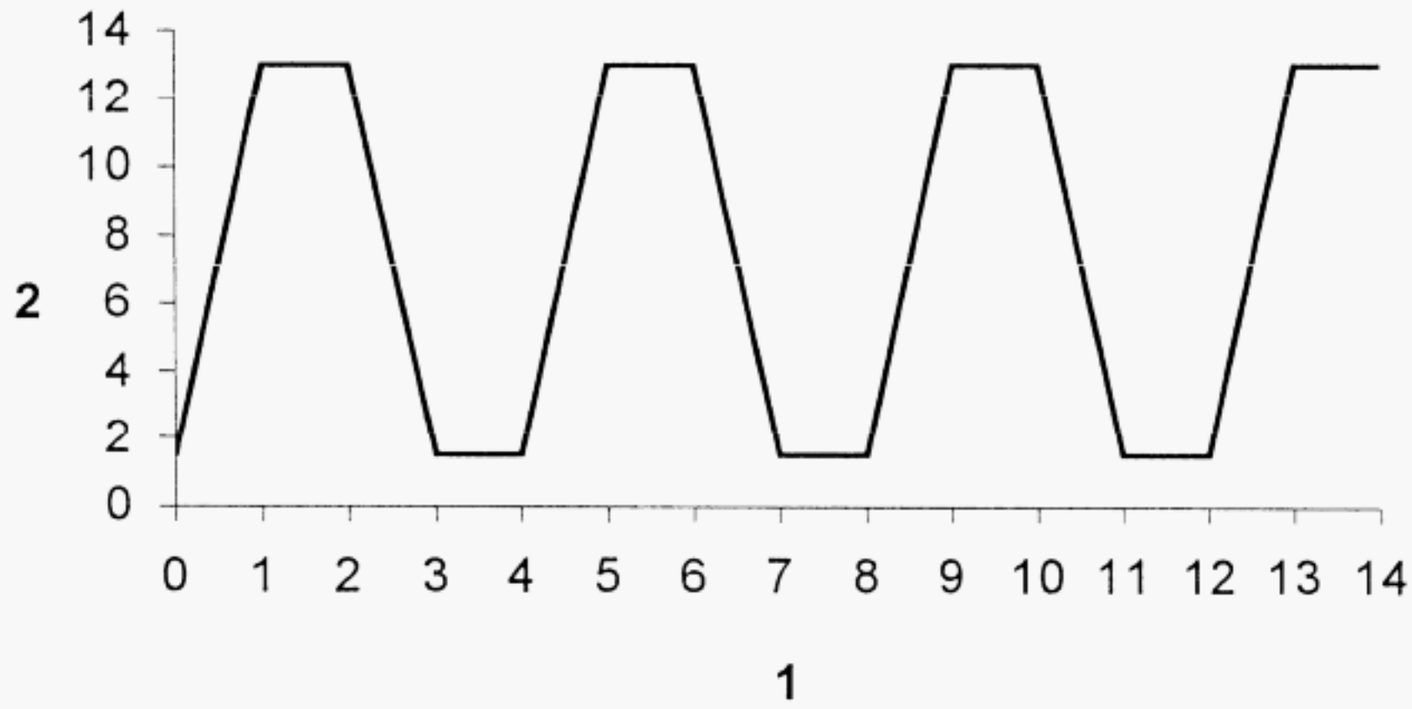

Key

1 Time in seconds

2 Pressure in bar

Figure 3 — Dynamic pressure test

8.2.4.2 A1 Test procedure A1

Position the filter in a test rig shown in Figure 2. The duration of the pressure increase and decrease shall be (1 ± 0,2) s. The filter used for the tests 8.2.4.2 shall not be used for subsequent testing.

8.3 Hydraulic requirements

8.3.1 Pressure drop

8.3.1.1 Principle

When the filter is new or cleaned, the pressure drop at the specified nominal flow rate shall not exceed 50 kPa A1 *deleted text* A1.

8.3.1.2 A1 Test procedure A1

The test assembly is shown in Figure 4. Connect the filter (5) in accordance with the manufacturer's instructions supplied with the filter. Install the filter between two sensors for pressure measurement (3) connected to adequately sized manometers (4) (error limit 2 kPa A1 *deleted text* A1). Alternatively, a differential pressure gauge (4) can be used.

If the appliance is fitted with a shut off valve, open it fully.

Adjust the flow rate by means of the regulating valve (1) installed downstream of the filter.

Measure the differential pressure at a range (e.g. 10) of flow rates in order to generate a pressure drop curve (curve A, Figure 5).

In order to determine the pressure drop curve for the filter itself, repeat the above procedure with the filter removed (curve B). The filter pressure drop (curve C) is obtained by subtracting curve B from curve A.

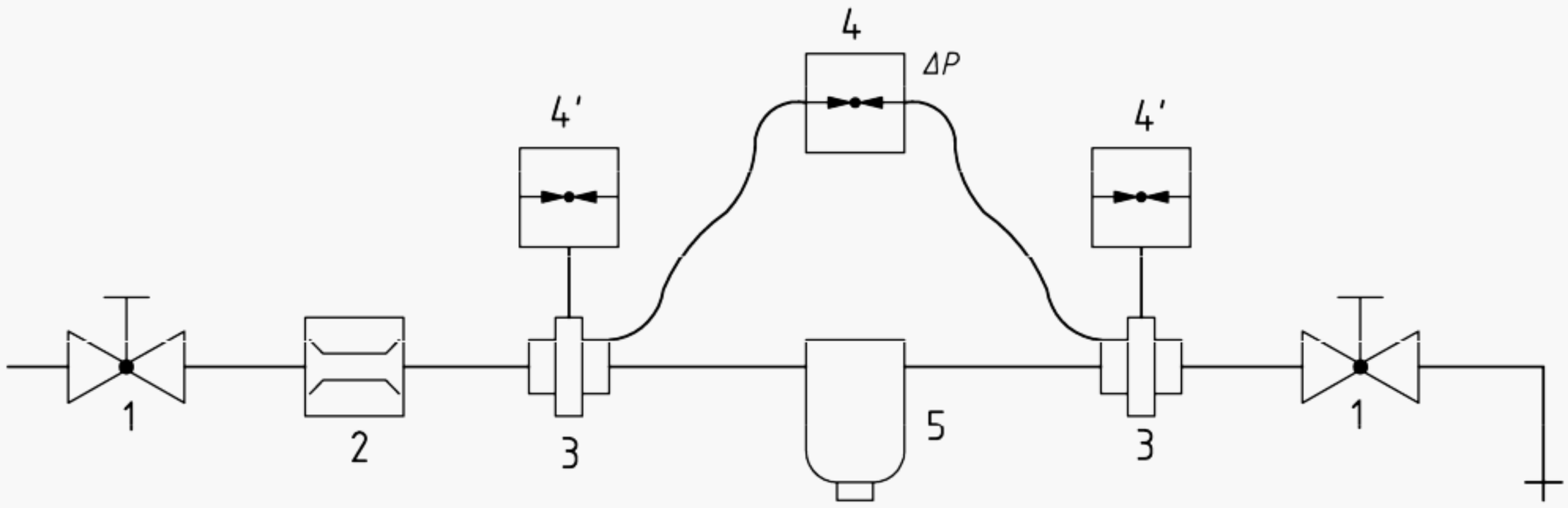

Key

1 Regulating valve
2 Flowmeter
3 Sensors for pressure measurement
4 Differential pressure gauge
4' Alternatively: two pressure gauges gauge
5 Appliance under test

Figure 4 — Flow rate/pressure loss testing equipment

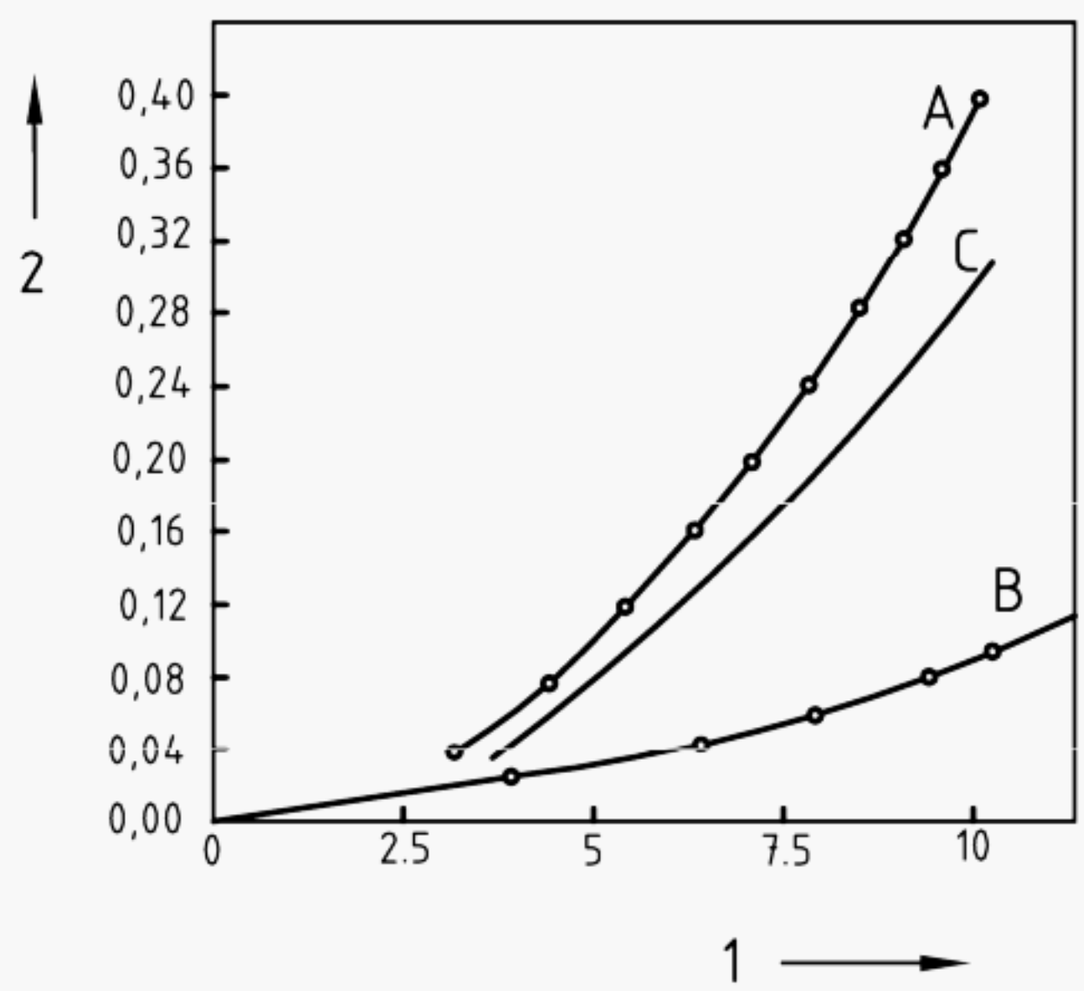

Key

1 Flow rate in m^3/h
2 Pressure drop in bar

Figure 5 — Flow rate as function of pressure drop

The nominal flow rates shall not be lower than specified in the following Table 2.

Table 2 — Flow rate values

Nominal size DN	15	20	25	32	40	50	65	80	100
Nom. Flow Rate Q_N l/s [a]	0,35	0,63	1,0	1,6	2,53	3,89	6,67	10	15,56
Nom. Flow Rate Q_N m^3/h [a]	1,27	2,27	3,6	5,8	9,1	14	24	36	56
[a] These flow rates correspond to a velocity of approx. 2 m/s.									

8.3.2 Filter surface velocity

8.3.2.1 Principle

The filter surface velocity shall not exceed 0,15 $m^3/(h\ cm^2)$ for back washable filters and 0,25 $m^3/(h\ cm^2)$ for replaceable cartridge filters.

8.3.2.2 A1 Test procedure A1

Measure the area of the surface of the filter element exposed to the influent water. Divide the flow rate corresponding to 50 kPa from the pressure drop curve obtained form 8.3.1.2 for the filter (in m^3/h) by the surface area (in cm^2).

8.4 Filtration requirements

8.4.1 Principle

The filter shall remove larger particles and permit smaller particles to pass through. The higher range of filtration where particles shall become removed, shall be between 100 µm and 150 µm (see Figure 8).

The lower range of filtration where particles shall still pass, shall be between A1 80 µm to 120 µm A1 (see Figure 8).

8.4.2 A1 Test procedure A1

8.4.2.1 Test arrangement

The maximum and minimum filter particle rating shall be determined with the aid of a test arrangement described in Figure 6. The water for the test shall be fed from a source (water mains, storage tank) through a pipe in which is installed a prefilter with a lower filter rating (less than 5µm), a watermeter and a regulating valve. Then the pipe splits in two parallel pipes. One of them shall be equipped with a regulating valve. The other shall be fitted with an injector by means of which an aqueous suspension of glass beads shall be injected from a mixing vessel into the test water. Then the two partial flows shall be reunited and pass through the filter under test with a velocity of 0,5 m/s (related to the nominal size of the filter connection). A sampling point downstream of the filter shall extract between 4 % and 5 % of the total water flow. The size distribution of the glass beads shall be determined by separation on suitable test sieves.

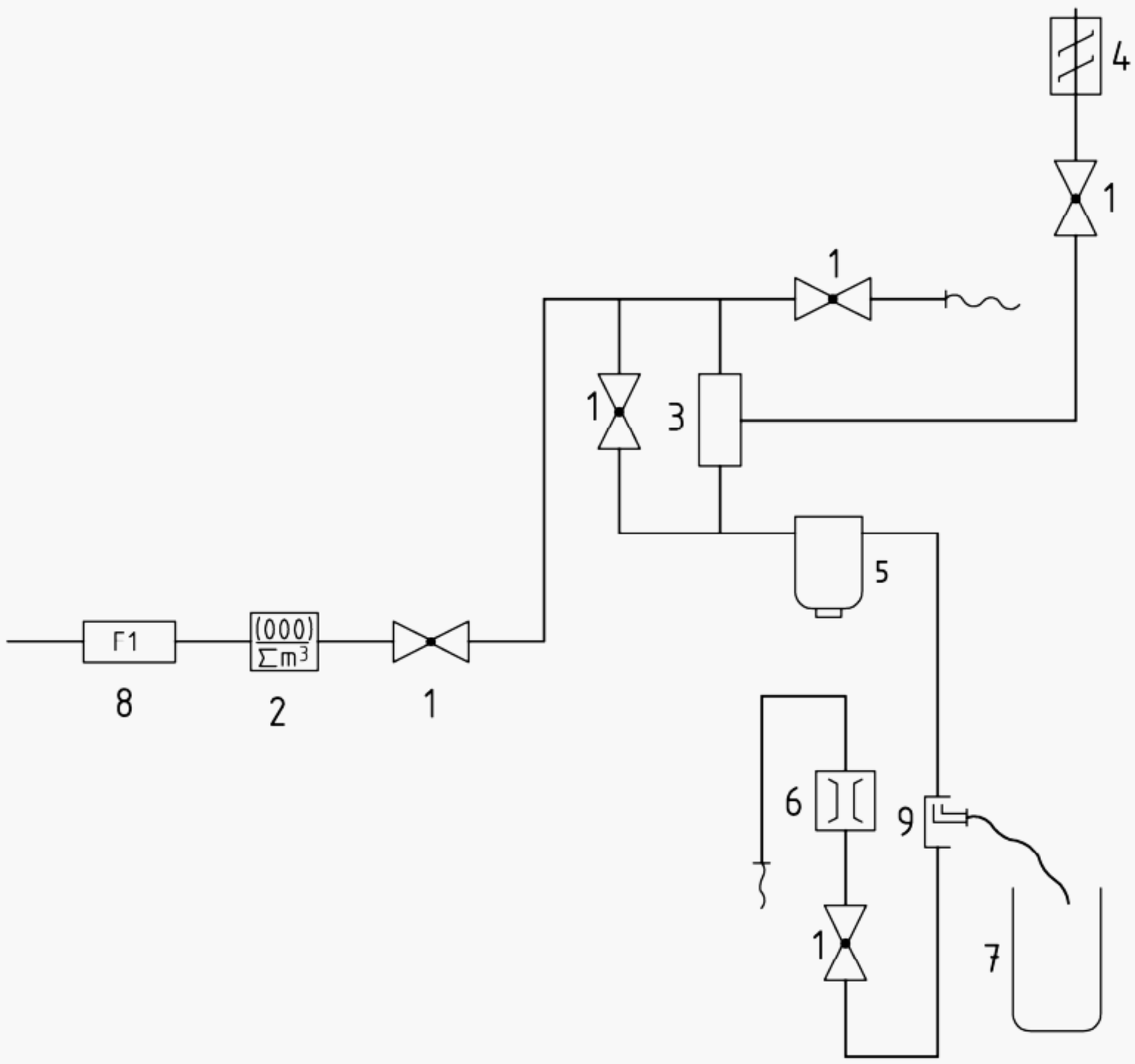

Key

1 Regulating valve
2 Water meter
3 Injector
4 Mixing vessel
5 Filter under test
6 Flowmeter
7 Collection vessel (graduated measuring cylinder)
8 Pre-filter
9 Sampling point

Figure 6 — Test for determination of minimum and maximum filter particle rating

The sampling device shown in Figure 7 shall consist of a pipe with an inside diameter of 25 mm. The sampling pipe with an inside diameter of 8 mm, an outside diameter of 10 mm and a length of 60 mm, shall be centered in this pipe. The leading edge of the sampling pipe shall be chamfered at an angle of 15° to the axis of the pipe.

The particle size fractions consist of spherical glass beads that have been separated by screening in increments of 20 µm to 30 µm. The particle size fractions used shall be based on those filter particle ratings that are likely to be achieved.

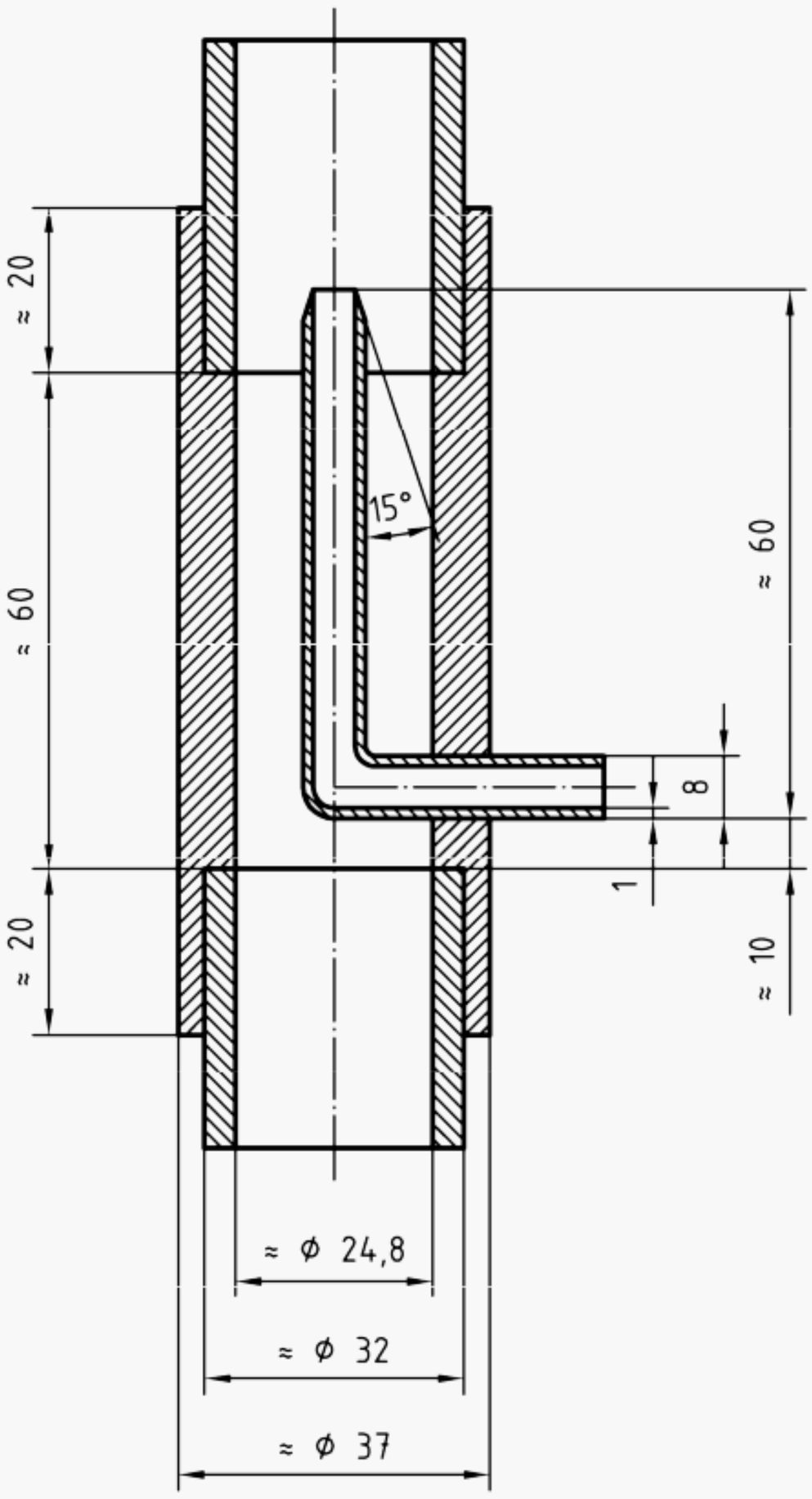

Figure 7 — Sampling device

8.4.2.2 Filtration test procedure

Carry out one test per fraction at the upper and one at the lower range of filter particle rating. If necessary, carry out a third test on a fraction between these values. This applies in particular to filters of intermediate separation performance. The quantity of glass beads used for the suspension shall be 1 g for filters up to nominal size DN 25, 2 g for filters with nominal sizes DN 32 and DN 40, and 4 g for filters with nominal sizes over DN 40.

After thorough stirring in the mixing vessel, introduce the suspension into the water flow via the injector. Use a wetting agent if any difficulties arise during the mixing of the suspension. Complete the introduction of the total quantity of suspension into the water within 5 min to 10 min, so as to ensure that the total quantity of suspension is flushed into the filter. Determine the particle size distribution in the separated water flow via the sampling point by sieving in accordance with ISO 2591-1 or by particle counting following the recommendations in [A1⟩ ISO 13320-1 ⟨A1]. Plot the results in accordance with ISO 9276-1 (Figure 8).

8.4.2.3 Blank test

Carry out a blank test for each filtration test in the manner described above, but exclude the filter element.

8.4.2.4 Calculation

The results of the blank test shall be taken as representing 100 % of the counted particles. Calculate the results of the filtration test for each particle size fraction as a percentage of the blank test.

At least one measurement shall be below the 10 % level and at least one measurement shall be above the 90 % level. Otherwise, repeat the test.

Carry out the blank test and the filtration tests three times. Replace the cartridges of single use filters or back washable filters after the collection of each fraction. The deviation in the three results shall not exceed ± 5 %.

8.4.3 Expression of results

The requirements are fulfilled if the resulting filtration curve crosses the 10 % line in the upper range (between 100 µm and 150 µm), and the 90 % line in the lower range (between 80 µm and 120 µm).

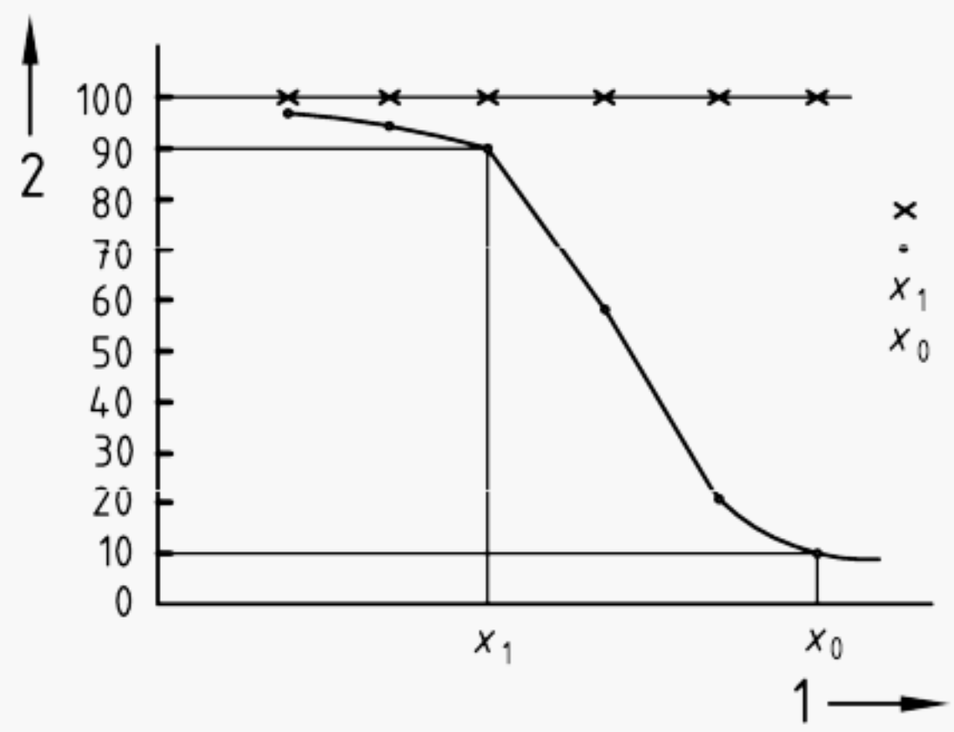

Key

1 Particle size, in µm

2 Pass rate, in %

Figure 8 — Graphic representation of filtration test results

8.5 Acoustic requirements

Mechanical filters shall be designated in accordance to the noise level as given in Table 3 in accordance with EN ISO 3822-3 at flow rates Q_N as given in Table 2.

Table 3 — Acoustic classification

Acoustic Group	L_{ap} (dB(A)) / Q_N (m^3/h)
I	≤ 20
II	≤ 30
Unclassified	> 30

8.6 Documentation and labelling

Confirm by visual inspection that the product designation contains the information detailed in clause 4 and that the documentation, marking and labelling conform to clause 9.

9 Technical documents, labelling and marking

9.1 [A1⟩ Technical documents ⟨A1]

Mechanical filters shall be accompanied by a technical product description with comprehensive instructions for installation, operation and maintenance.

The instruction manual shall include a pressure drop chart up to 100 kPa [A1⟩ *deleted text* ⟨A1]. In case of backwashable filters, information regarding frequency of backwashing and the method of discharging the backwashing water following EN 1717 shall be specified.

Instructions for single use filters shall provide the following information:

— frequency of filter element replacement;

— opening and draining of filter if needed;

— removal and disposal of filter element;

— correct and hygienic insertion of replacement filter element.

9.2 Marking

The direction of the flow of the water through the filter shall be permanently and clearly marked on the filter housing. It shall be visible after installation.

9.3 Labelling

9.3.1 Filters

A label shall be permanently fixed to the filter and be clearly legible in operation after the filter has been installed. It shall include, as a minimum, the following information:

— manufacturer's and/or supplier's name;

— nominal size (DN);

— nominal flow rate, in m^3/h, for a definite pressure drop, in kPa [A1⟩ *deleted text* ⟨A1] ;

— nominal pressure PN, in kPa [A1⟩ *deleted text* ⟨A1] ;

— maximum design temperature in °C;

— products made from dezincification resistant brass shall be marked „DR".

In the case of appliances with single use filter elements:

— type of approved filter elements.

In the case of backwashable filter elements:

— maximum and minimum filter particle rating, in µm.

9.3.2 A1 Filter elements A1

The filter element packaging shall provide the following information:

— manufacturer's and/or supplier's name;

— type of filter element;

— maximum and minimum filter particle rating;

— hygiene requirements to be met when replacing the filter element.

Annex A
(informative)

Bibliographical information

- 98/83/EC - Council Directive of 3 November 1998 on the quality of water intended for human consumption.

A.1 (informative) : Example of Designation

- Mechanical filter, DN20, PN10, inlet 3/4" female thread, outlet 3/4“, male union, according to ISO 7-1 backwashable, body of cast bronze, acoustic group II - [A1⟩ EN 13443-1 ⟨A1].

- Mechanical filter, DN25, PN16, with 1" male union on both inlet and outlet connection, according to ISO 7-1, with single use filter elements, body of cast brass, acoustic group I - [A1⟩ EN 13443-1 ⟨A1].

- Mechanical filter, DN80, PN16, with flanges according to [A1⟩ EN 1092-3 ⟨A1], backwashable, body of cast bronze, [A1⟩ EN 13443-1 ⟨A1].

A.2 (informative) : Example of Materials

Copper alloys

G- Cu Sn 10

G- Cu Sn 2 Zn Pb

G- Cu Sn 5 Zn Pb

GK-Cu Zn 37 Pb

Cu Zn 39 Pb 3

Cu Zn 40 Pb 2

Cu Sn 5 Pb 5 Zn 5

Cu Sn 2 Pb 5 Zn 8

Cu Sn 3 Pb 5 Zn 8

LG 1

Castings (with adequate coating)

GG 25

GG 30

GGG 40

GGG 50

GGG 35.3

GGG 40.3

GSC 25

A.3 (informative) : Example of end connections (DN designated)

Type	DN15	DN20	DN25	DN32	DN40	DN50	DN65	DN80	DN100
a) internal thread ISO 7-1	Rp 1/2	Rp ¾	Rp 1	Rp 1.1/4	Rp 1.1/2	Rp 2	Rp 2.1/2	Rp 3	Rp 4
b) external thread ISO 7-1	R 1/2	R ¾	R 1	R 1.1/4	R 1.1/2	R 2	R 2.1/2	R 3	R 4
c) flat faced external thread [A1] EN ISO 228–1 [A1]	G 3/4B	G 1B	G 1.1/4B	G 1.1/2B	G 1.1/2B G 1.3/4B	G 2B	G 3B	G 3.1/2B	-
d) external thread with shoulder [A1] EN ISO 228–1 [A1]	G 1/2B	G 3/4B	G 1B	G 1.1/4B	G 1.1/2B G 1.3/4B	G 2B G 2.3/8B	G 2.1/2B	G 3B	G 4B
e) capillary socket EN 1254–2	15 18	22	28	35	42	54	76,1	88,9	108
f) male capillary end EN 1254–1	15 18	22	28	35	42	54	76,1	88,9	108
g) compression ends for copper tubes EN 1254-2	15 18	22	28	35	42	54	76,1	88,9	108
h) flange ISO 7005-3	15	20	25	32	40	50	65	80	100

Annex B
(normative)

A1 Installation, operation and maintenance

B.1 Introduction

This annex defines essential information and instructions on the installation, operation, maintenance and repair of mechanical filters with a particle rating between 80 µm and 150 µm. It transposes the general requirements in EN 15161 into specific requirements for mechanical filters for point-of-entry systems, as well as back-washable and single-use (cartridge) filters.

Correct operation and maintenance of the device is essential for successful and hygienic performance. Devices in compliance with this standard shall be provided with all necessary information and instructions on operation and maintenance appropriate to the device being supplied. The following information is stipulated as a minimum, it is not exhaustive and it is not intended to substitute for the supplier's instructions.

NOTE For the purposes of this standard the supplier is the organisation whose name is identified on the product being sold. The supplier may or may not be the manufacturer.

B.2 Installation requirements

B.2.1 Equipment selection

Selection of a device that is appropriate to the performance and operational expectations, and to the intended installation site, is essential. Information outlining the key installation and operation requirements shall be made available at the point of purchase, in the form of either brochures or specification sheets or clearly marked on the external product packaging. This information shall identify limitations on the location for installation in terms of dimensional requirements and environmental conditions (e.g. ambient temperature). The information shall offer guidance on frequency of periodic operation and maintenance along with any associated accessibility required. It shall also identify the water supply requirements (pressure limitations, pipe sizes) along with proximity requirements for other services which may be necessary such as availability of electric power, drainage facilities, etc.

B.2.2 Installation

Installation instructions, provided with the device shall include a list of the components provided with the device along with a list clearly identifying any other components deemed necessary to complete a successful installation (e. g. isolation valves). The characteristics of such additional equipment shall be clearly identified.

The instructions shall include a sequenced procedure outlining assembly of the components including connection to the water supply and to any other service(s) required. The instructions shall include definitive guidelines identifying the dimensional and orientational requirements essential to position the device and its ancillaries in order to provide adequate access for operation and maintenance at the chosen installation site.

In addition, the installation instructions shall include a checklist to ensure that the device is located:

— in a suitable location (e.g. clean, well ventilated, adequately illuminated and protected against pests, frost, physical damage, chemical damage) within the domestic water distribution system;

— remote or insulated from sources of heat (e. g. washing machines, dishwashers, boilers, cookers and hot water pipework);

— as close as possible to the existing distribution system and to other necessary services.

NOTE Drinking water for cleaning purposes and appropriate waste disposal facilities should be available.

B.2.3 Labelling

The device as supplied shall be labelled, with a durable waterproof label mounted on, or close to the device, with the information required in accordance with 9.3.1.

B.2.4 Commissioning

The instructions shall contain a procedure for putting the device into service including as a minimum:

— initial filling and pressurisation of the system;

— checking for leaks;

— flushing requirements (time and/or volume);

— performance check (using control kit, if provided).

The instructions shall provide advice on checking performance and, where a control kit is provided, detailed instructions on the use of the kit and interpretation of the results.

B.2.5 Hand over

The instructions shall identify that, where commissioning is carried out by a third party, this third party shall, after checking the performance of the device, hand over to the owner all of the printed instructions on its use (e.g. testing procedure and frequency, actions to be taken dependant upon the testing results), along with the updated logbook and the control kit, where provided, for monitoring the device performance.

NOTE In its simplest form, the logbook may be a single sheet (which may be adhesive backed to secure to the device) which permits, at the very least, a record of filter cartridge change dates.

B.3 Operation requirements

The instructions shall include procedures on checks to be made by the user during normal day to day operation for optimum performance of the device. The checklist shall include, as a minimum, instructions on how to be alert to the filtered water quality with respect to the treatment expectations (visible quality of the treated water).

B.4 Maintenance requirements

At least every six months the filter element in a filter shall be replaced (single-use filter) or back-washed (back-wash filter).

In order to maintain optimum performance of the device, the instructions shall include procedures and checks to be made at specified time intervals, including instructions:

— to carry out the replacement procedure of the single-use filter in accordance with the instructions (to include dismantling, cartridge disposal, reassembly);

— to record on the logbook the date of the cartridge replacement;

— to inspect the disassembled system for signs of leakage or damage;

— to call for repair in the event that any defect or failure is noticed (e.g. taste, odour, colour in the treated water).

The instructions shall provide guidance on the hygiene precautions necessary for any maintenance operations that require dismantling of the system.

NOTE An example of good practice is as follows:

Hygiene. Maintenance operations that require dismantling the system, such that water contact parts are exposed, should be subject to careful, hygienic control in order to avoid contamination of the system. Preferably, disposable gloves should be used to avoid personal contamination of the system parts; any tools used that may come into contact with the wetted parts should be cleaned and disinfected in accordance with the instructions before use. The spent cartridge should be carefully disposed and the replacement cartridge should remain sealed in its protective wrapping until the last practical moment.

Routine maintenance and timely replacement of consumable parts are essential to the satisfactory performance of the device. Failure to replace an exhausted or plugged cartridge can result in poor reduction efficiency for the claimed parameters or low flow.

Regular use is also important. Long periods of stagnation can give rise to off-taste in the treated water so, as with any drinking water supply, the system should be flushed before reuse, if it has been out of use for a period of several weeks or more.

B.5 Repair requirements

B.5.1 General

The instructions shall include advice stating that any corrective action carried out on the system that is not regarded as routine and, therefore, not described in the instructions, is to be performed only by a competent repair person. The instructions shall identify, either contact details for approved repair engineers or alternatively provide a route (telephone, website) for contacting the supplier to obtain information on such service.

B.5.2 Repair documentation

The instructions shall contain a statement advising that a record of any repair intervention is kept within the logbook.

B.6 Troubleshooting

The instructions shall provide guidance on troubleshooting in the event that problems occur with the device.

An example of a troubleshooting guide is given in Table B.1.

Table B.1 — Troubleshooting guide (example)

Observation	Possible cause	Remedy
Low flow from the device	Plugged cartridge (single-use filter)	Replace the cartridge
	Back-wash failed (back-washable filters)	Initiate back-wash Clean system, if ineffective Call for repair, if back-wash fails
	Low supply pressure	Check flow from other outlets
Taste or odour from filtered water	Supply contaminated	Check for same characteristic in feed water
	Excessive period of non-use (stagnation)	Flush filter system for several minutes Replace cartridge Back-wash the filter
Sediment in filtered water	High influent contamination	Check incoming water supply
	Excessive flow rate though unit	Check filter element for damage or leakage
	Filter element damaged (back-washable filters)	Call for repair or replace cartridge
	Cartridge damaged or incorrectly assembled (single-use filters)	Inspect cartridge and reassembly of cartridge or assembly of new cartridge
Water leakage from system	Housing insufficiently tightened	Tighten in accordance with manufacturer's instructions
	Faulty joint, Check filter housing for damage	Check O-rings and gasket for deformation or deterioration Replacement of filter housing

A1

Bibliography

[A1] *deleted text* [A1]

EN 1092-1, *Flanges and their joints - Circular flanges for pipes, valves, fittings and accessories, PN designated - Part 1: Steel flanges.*

EN 1092-2, *Flanges and their joints - Circular flanges for pipes, valves, fittings and accessories, PN designated - Part 2: Cast iron flanges.*

[A1] EN 1092-3 [A1], *Flanges and their joints - Circular flanges for pipes, valves, fittings and accessories, PN designated - Part 3: Copper alloy flanges.*

EN 1254-1, *Copper and copper alloys - Plumbing fittings - Part 1: Fittings with ends for capillary soldering or capillary brazing to copper tubes.*

EN 1254-2, *Copper and copper alloys - Plumbing fittings - Part 2: Fittings with compression ends for use with copper tubes.*

[A1] *deleted text* [A1]

[A1] EN 13443-2:2005+A1, *Water conditioning equipment inside buildings - Mechanical filters - Part 2: Particle rating 1 µm to less than 80 µm - Requirements for performance, safety and testing* [A1].

[A1] EN ISO 228-1, *Pipe threads where pressure-tight joints are not made on the threads — Part 1: Dimensions, tolerances and designation (ISO 228-1:2000)* [A1]

[A1] *deleted text* [A1]

[A1] ISO 7-1, *Pipe threads where pressure-tight joints are made on the threads - Part 1: Dimensions, tolerances and designation* [A1]

[A1] ISO 7005-3, *Metallic flanges — Part 3: Copper alloy and composite flanges* [A1]

blank

BSI — British Standards Institution

BSI is the independent national body responsible for preparing British Standards. It presents the UK view on standards in Europe and at the international level. It is incorporated by Royal Charter.

Revisions

British Standards are updated by amendment or revision. Users of British Standards should make sure that they possess the latest amendments or editions.

It is the constant aim of BSI to improve the quality of our products and services. We would be grateful if anyone finding an inaccuracy or ambiguity while using this British Standard would inform the Secretary of the technical committee responsible, the identity of which can be found on the inside front cover. Tel: +44 (0)20 8996 9000. Fax: +44 (0)20 8996 7400.

BSI offers members an individual updating service called PLUS which ensures that subscribers automatically receive the latest editions of standards.

Buying standards

Orders for all BSI, international and foreign standards publications should be addressed to Customer Services. Tel: +44 (0)20 8996 9001. Fax: +44 (0)20 8996 7001. Email: orders@bsi-global.com. Standards are also available from the BSI website at http://www.bsi-global.com.

In response to orders for international standards, it is BSI policy to supply the BSI implementation of those that have been published as British Standards, unless otherwise requested.

Information on standards

BSI provides a wide range of information on national, European and international standards through its Library and its Technical Help to Exporters Service. Various BSI electronic information services are also available which give details on all its products and services. Contact the Information Centre. Tel: +44 (0)20 8996 7111. Fax: +44 (0)20 8996 7048. Email: info@bsi-global.com.

Subscribing members of BSI are kept up to date with standards developments and receive substantial discounts on the purchase price of standards. For details of these and other benefits contact Membership Administration. Tel: +44 (0)20 8996 7002. Fax: +44 (0)20 8996 7001. Email: membership@bsi-global.com.

Information regarding online access to British Standards via British Standards Online can be found at http://www.bsi-global.com/bsonline.

Further information about BSI is available on the BSI website at http://www.bsi-global.com.

Copyright

Copyright subsists in all BSI publications. BSI also holds the copyright, in the UK, of the publications of the international standardization bodies. Except as permitted under the Copyright, Designs and Patents Act 1988 no extract may be reproduced, stored in a retrieval system or transmitted in any form or by any means – electronic, photocopying, recording or otherwise – without prior written permission from BSI.

This does not preclude the free use, in the course of implementing the standard, of necessary details such as symbols, and size, type or grade designations. If these details are to be used for any other purpose than implementation then the prior written permission of BSI must be obtained.

Details and advice can be obtained from the Copyright & Licensing Manager. Tel: +44 (0)20 8996 7070. Fax: +44 (0)20 8996 7553. Email: copyright@bsi-global.com.

BSI
389 Chiswick High Road
London
W4 4AL