# Glass packaging — 26 H 126 crown finish — Dimensions

ICS 55.100

NO COPYING WITHOUT BSI PERMISSION EXCEPT AS PERMITTED BY COPYRIGHT LAW

Copyright British Standards Institution
Provided by IHS under license with BSI - Uncontrolled Copy
No reproduction or networking permitted without license from IHS

Not for Resale

British Standards

# National foreword

This British Standard is the UK implementation of EN 14635:2010. It supersedes BS EN 14635:2006 which is withdrawn.

The UK participation in its preparation was entrusted to Technical Committee PKW/0/-/7, Packaging - Glass.

A list of organizations represented on this committee can be obtained on request to its secretary.

This publication does not purport to include all the necessary provisions of a contract. Users are responsible for its correct application.

Compliance with a British Standard cannot confer immunity from legal obligations.

This British Standard was published under the authority of the Standards Policy and Strategy Committee on 31 July 2010

© BSI 2010

ISBN 978 0 580 65729 0

Amendments/corrigenda issued since publication

| Date | Comments |
|---|---|
| | |
| | |
| | |
| | |

Copyright British Standards Institution
Provided by IHS under license with BSI - Uncontrolled Copy
No reproduction or networking permitted without license from IHS

Not for Resale

EUROPEAN STANDARD
NORME EUROPÉENNE
EUROPÄISCHE NORM

# EN 14635

June 2010

ICS 55.100

Supersedes EN 14635:2004

English Version

# Glass packaging - 26 H 126 crown finish - Dimensions

Emballages en verre - Bague couronne 26 H 126 - Dimensions

Verpackungen aus Glas - Kronenmundstück 26 H 126 - Maße

This European Standard was approved by CEN on 5 May 2010.

CEN members are bound to comply with the CEN/CENELEC Internal Regulations which stipulate the conditions for giving this European Standard the status of a national standard without any alteration. Up-to-date lists and bibliographical references concerning such national standards may be obtained on application to the CEN Management Centre or to any CEN member.

This European Standard exists in three official versions (English, French, German). A version in any other language made by translation under the responsibility of a CEN member into its own language and notified to the CEN Management Centre has the same status as the official versions.

CEN members are the national standards bodies of Austria, Belgium, Bulgaria, Croatia, Cyprus, Czech Republic, Denmark, Estonia, Finland, France, Germany, Greece, Hungary, Iceland, Ireland, Italy, Latvia, Lithuania, Luxembourg, Malta, Netherlands, Norway, Poland, Portugal, Romania, Slovakia, Slovenia, Spain, Sweden, Switzerland and United Kingdom.

EUROPEAN COMMITTEE FOR STANDARDIZATION
COMITÉ EUROPÉEN DE NORMALISATION
EUROPÄISCHES KOMITEE FÜR NORMUNG

**Management Centre: Avenue Marnix 17, B-1000 Brussels**

© 2010 CEN All rights of exploitation in any form and by any means reserved worldwide for CEN national Members.

Ref. No. EN 14635:2010: E

Copyright British Standards Institution
Provided by IHS under license with BSI - Uncontrolled Copy
No reproduction or networking permitted without license from IHS

Not for Resale

## Contents

Page

**Foreword** ..... 3
**Introduction** ..... 4
**1 Scope** ..... 5
**2 Normative references** ..... 5
**3 Dimensions** ..... 5
**Bibliography** ..... 10



Copyright British Standards Institution
Provided by IHS under license with BSI - Uncontrolled Copy
No reproduction or networking permitted without license from IHS
Not for Resale

## Foreword

This document (EN 14635:2010) has been prepared by Technical Committee CEN/TC 261 “Packaging”, the secretariat of which is held by AFNOR.

This European Standard shall be given the status of a national standard, either by publication of an identical text or by endorsement, at the latest by December 2010, and conflicting national standards shall be withdrawn at the latest by December 2010.

Attention is drawn to the possibility that some of the elements of this document may be the subject of patent rights. CEN [and/or CENELEC] shall not be held responsible for identifying any or all such patent rights.

This document supersedes EN 14635:2004.

The main technical change from the previous edition is the introduction of a new figure related to the Point "P".

According to the CEN/CENELEC Internal Regulations, the national standards organizations of the following countries are bound to implement this European Standard: Austria, Belgium, Bulgaria, Croatia, Cyprus, Czech Republic, Denmark, Estonia, Finland, France, Germany, Greece, Hungary, Iceland, Ireland, Italy, Latvia, Lithuania, Luxembourg, Malta, Netherlands, Norway, Poland, Portugal, Romania, Slovakia, Slovenia, Spain, Sweden, Switzerland and the United Kingdom.



Copyright British Standards Institution
Provided by IHS under license with BSI - Uncontrolled Copy
No reproduction or networking permitted without license from IHS
Not for Resale

## Introduction

This document is based on CE.T.I.E. (International Technical Centre for Bottling and related Packaging) data sheet GME 13.02 Revision 1 (2007) [1].

Efficient packaging is of great importance for the distribution and the protection of goods. Insufficient or inappropriate packaging can lead to damage or wastage of the contents of the pack.


Copyright British Standards Institution
Provided by IHS under license with BSI - Uncontrolled Copy
No reproduction or networking permitted without license from IHS
Not for Resale

## 1 Scope

This European standard specifies the dimensions of the 26 mm shallow crown finish for glass bottles containing beverages. The shallow crown finish is designed to use a metal crown closure (see CE.T.I.E. data sheet EC1-02 revision 1 [2]).

## 2 Normative references

The following referenced documents are indispensable for the application of this document. For dated references, only the edition cited applies. For undated references, the latest edition of the referenced document (including any amendments) applies.

ISO 9058, *Glass containers — Standard tolerances for bottles*

## 3 Dimensions

The design and dimensions of the finish shall be as shown in Figures 1, 2, 3, 4 and 5.

Details, which are not specified shall be selected in accordance with the application.

For general tolerances see ISO 9058.

Dimensions in millimetres

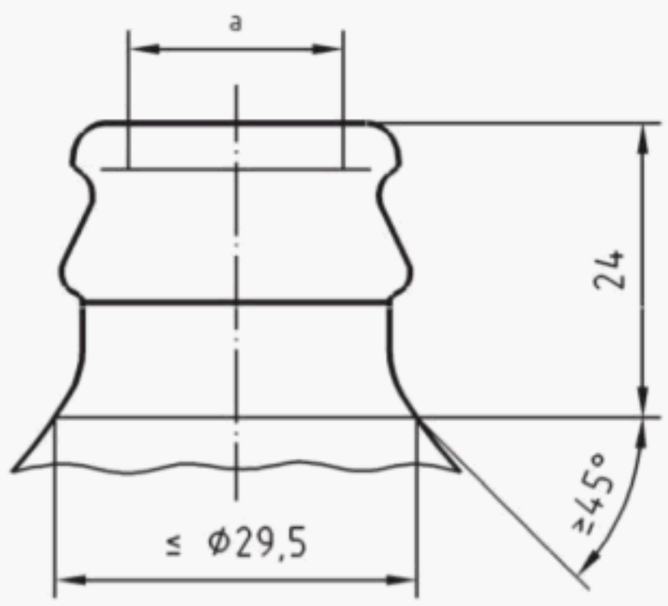


minimum through bore ∅

15,5 **Key**

a ∅ between 18,5 max and 17 min measured at 3 mm max down from the top

**Figure 1 — Shoulder and bore dimensions**

Construction limit: certain capping equipment may place further dimensional limits on the neck contour.



Copyright British Standards Institution
Provided by IHS under license with BSI - Uncontrolled Copy
No reproduction or networking permitted without license from IHS
Not for Resale

Dimensions in millimetres

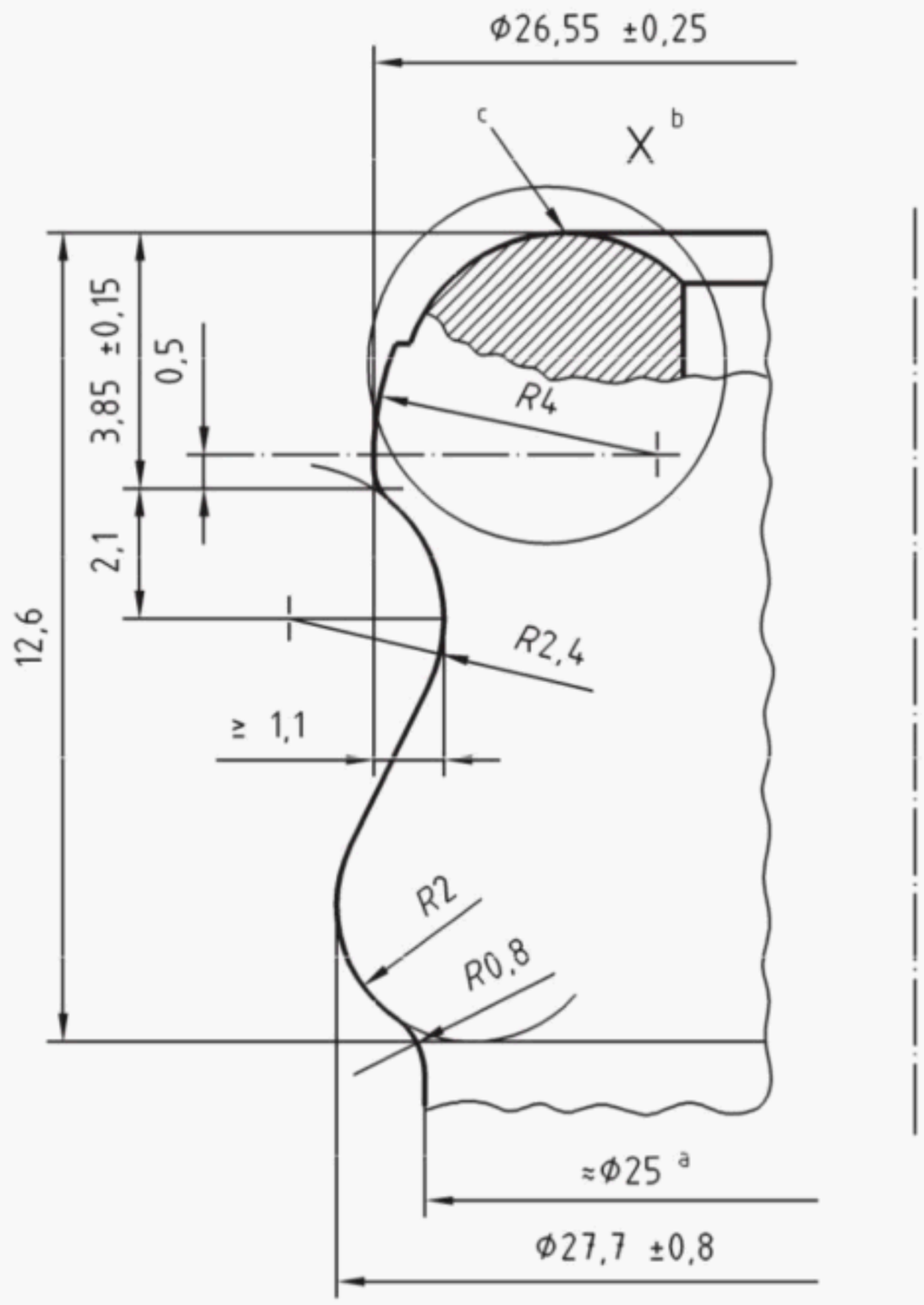


**Key**

a Nominal diameter to suit glass manufacturer.

b Detail X: see Figures 4 and 5

c Top of the finish

**Figure 2 — Profile of the finish**



Copyright British Standards Institution
Provided by IHS under license with BSI - Uncontrolled Copy
No reproduction or networking permitted without license from IHS
Not for Resale

Dimensions in millimetres

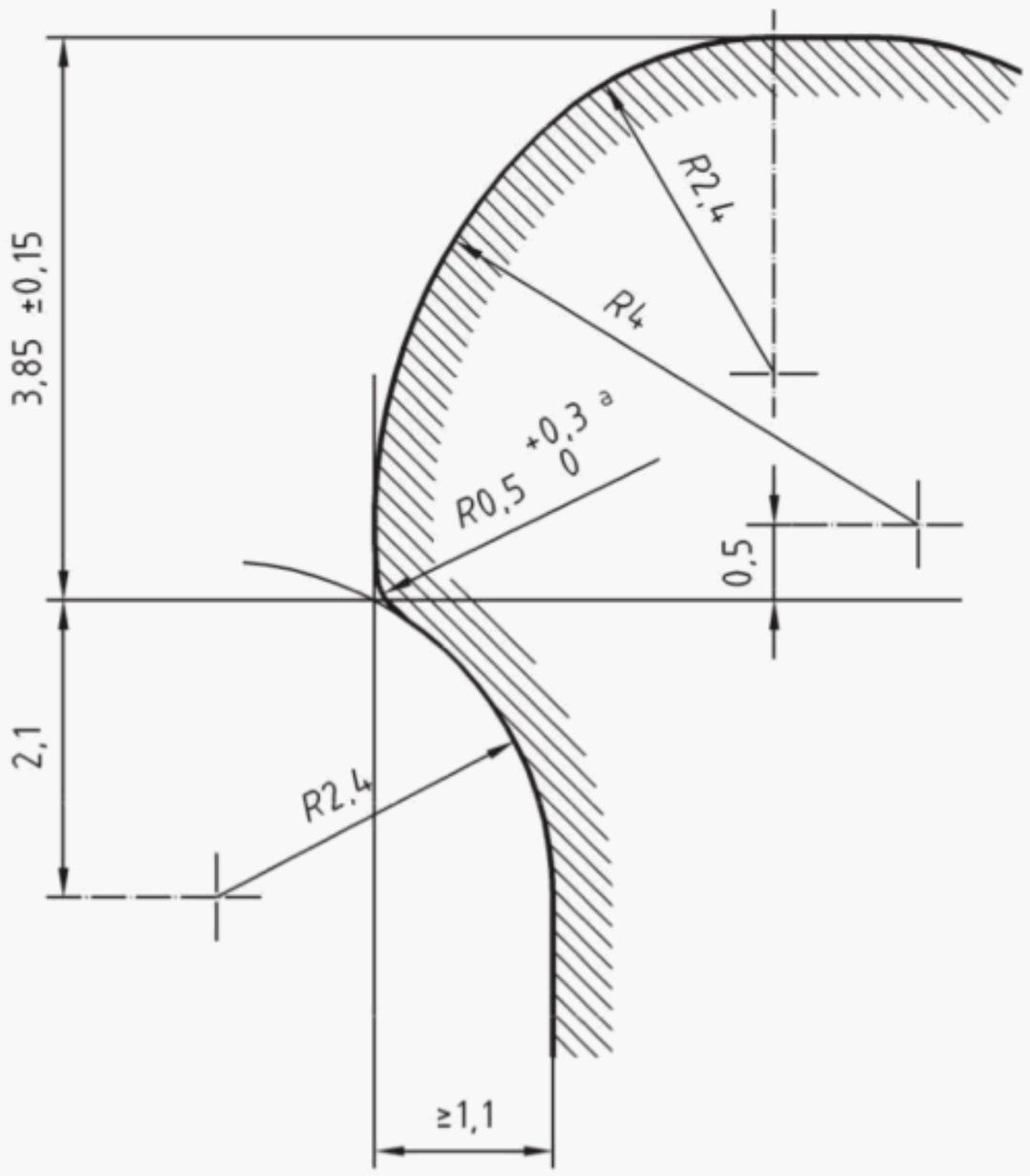


**Key**

a For optimum performance, the radius should lie between 0,5 and 0,8 excluding the vertical mould joint, and be as near as possible to 0,5.

**Figure 3 — Point "P"**



Copyright British Standards Institution
Provided by IHS under license with BSI - Uncontrolled Copy
No reproduction or networking permitted without license from IHS
Not for Resale

Dimensions in millimetres

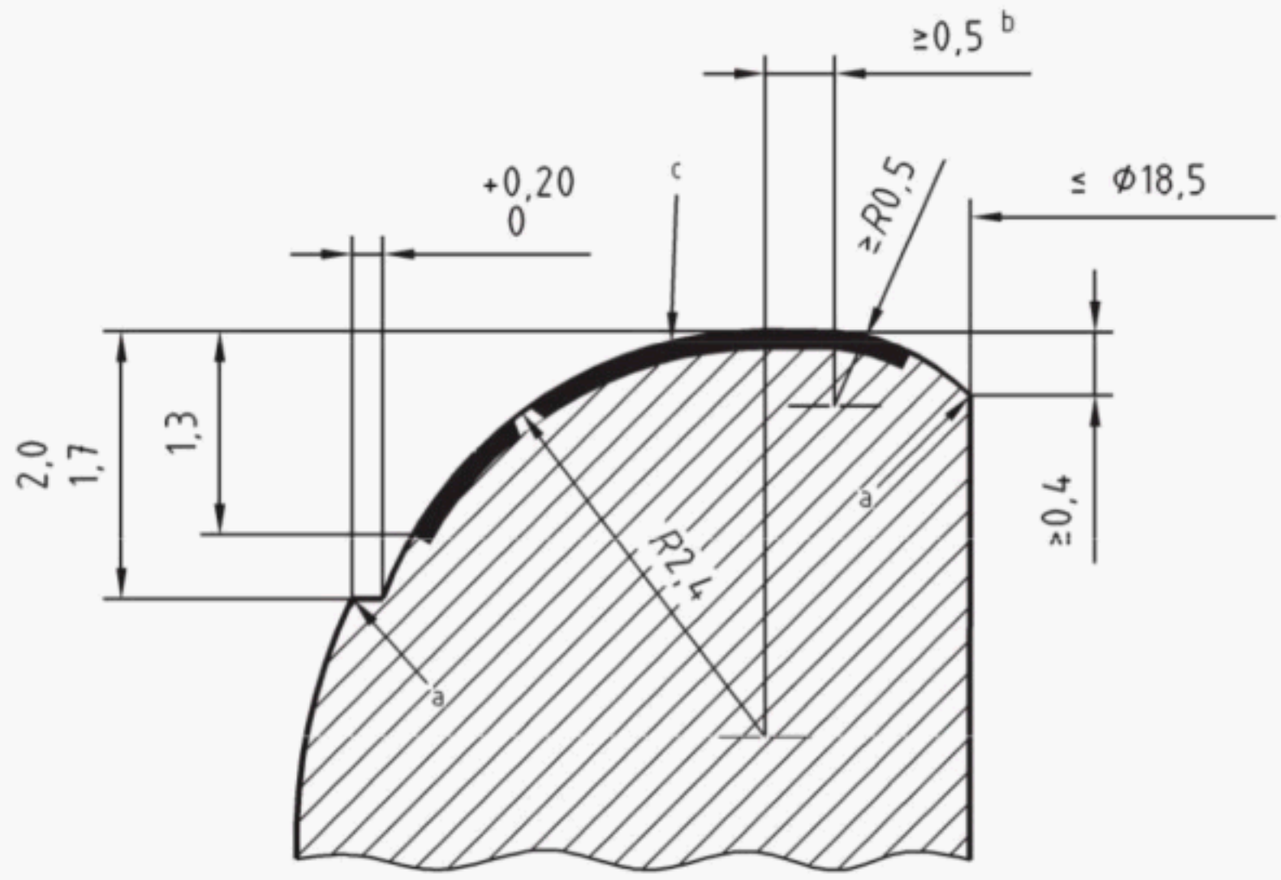


**Key**

a Mould parting line of glass finish

b Flat

c Glass sealing surface

**Figure 4 — Detail X – Glass sealing surface – Alternative 1**

Contact between the crown cork liner compound and the internal mould parting line of glass finish should be avoided (see CE.T.I.E. data sheets EC1-02 revision 1 [2] and EC1-021 [3]). The sealing surface should be smooth and free of any defects.



Copyright British Standards Institution
Provided by IHS under license with BSI - Uncontrolled Copy
No reproduction or networking permitted without license from IHS
Not for Resale

Dimensions in millimetres

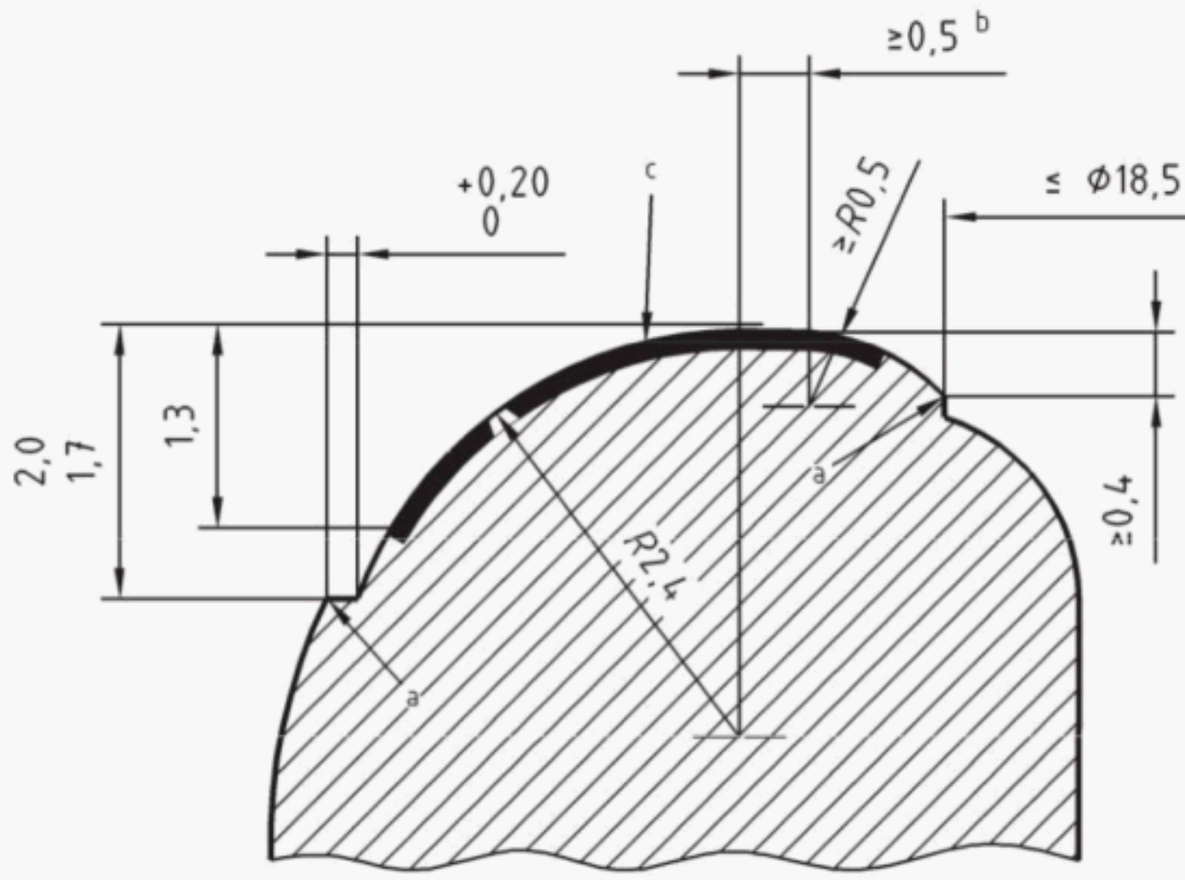


**Key**

a Mould parting line of glass finish

b Flat

c Glass sealing surface

**Figure 5 — Detail X – Glass sealing surface – Alternative 2**

Contact between the crown cork liner compound and the internal mould parting line of glass finish should be avoided (see CE.T.I.E. data sheets EC1-02 revision 1 [2] and EC1-021 [3]). The sealing surface should be smooth and free of any defects.



Copyright British Standards Institution
Provided by IHS under license with BSI - Uncontrolled Copy
No reproduction or networking permitted without license from IHS
Not for Resale

# Bibliography

[1] CE.T.I.E. data sheet GME 13.02 Revision 1, *26 H 126 Crown finish* [1)]

[2] CE.T.I.E. EC1-02 revision 1, *26 millimetres crown cork* [1)]

[3] CE.T.I.E. EC1-021, *26 millimetres crown cork: main liner profiles* [1)]

---

1) Obtainable through

Centre Technique International de l'Embouteillage (CE.T.I.E), 112-114, rue La Boétie, 75008 Paris, France: ~~www.cetie.org~~, TP: 0033-1-42 65 26 45, TF: 0033-1-40 07 03 21



Copyright British Standards Institution
Provided by IHS under license with BSI - Uncontrolled Copy
No reproduction or networking permitted without license from IHS
Not for Resale

This page has been intentionally left blank

Copyright British Standards Institution
Provided by IHS under license with BSI - Uncontrolled Copy
No reproduction or networking permitted without license from IHS
Not for Resale

# BSI - British Standards Institution

BSI is the independent national body responsible for preparing British Standards. It presents the UK view on standards in Europe and at the international level. It is incorporated by Royal Charter.

Revisions

British Standards are updated by amendment or revision. Users of British Standards should make sure that they possess the latest amendments or editions.

It is the constant aim of BSI to improve the quality of our products and services. We would be grateful if anyone finding an inaccuracy or ambiguity while using this British Standard would inform the Secretary of the technical committee responsible, the identity of which can be found on the inside front cover. Tel: +44 (0)20 8996 9000. Fax: +44 (0)20 8996 7400.

BSI offers members an individual updating service called PLUS which ensures that subscribers automatically receive the latest editions of standards.

Buying standards

Orders for all BSI, international and foreign standards publications should be addressed to Customer Services. Tel: +44 (0)20 8996 9001. Fax: +44 (0)20 8996 7001 Email: orders@bsigroup.com You may also buy directly using a debit/credit card from the BSI Shop on the Website http://www.bsigroup.com/shop

In response to orders for international standards, it is BSI policy to supply the BSI implementation of those that have been published as British Standards, unless otherwise requested.

Information on standards

BSI provides a wide range of information on national, European and international standards through its Library and its Technical Help to Exporters Service. Various BSI electronic information services are also available which give details on all its products and services. Contact Information Centre. Tel: +44 (0)20 8996 7111 Fax: +44 (0)20 8996 7048 Email: info@bsigroup.com

Subscribing members of BSI are kept up to date with standards developments and receive substantial discounts on the purchase price of standards. For details of these and other benefits contact Membership Administration. Tel: +44 (0)20 8996 7002 Fax: +44 (0)20 8996 7001 Email: membership@bsigroup.com

Information regarding online access to British Standards via British Standards Online can be found at http://www.bsigroup.com/BSOL

Further information about BSI is available on the BSI website at http://www.bsigroup.com.

Copyright

Copyright subsists in all BSI publications. BSI also holds the copyright, in the UK, of the publications of the international standardization bodies. Except as permitted under the Copyright, Designs and Patents Act 1988 no extract may be reproduced, stored in a retrieval system or transmitted in any form or by any means – electronic, photocopying, recording or otherwise – without prior written permission from BSI.

This does not preclude the free use, in the course of implementing the standard, of necessary details such as symbols, and size, type or grade designations. If these details are to be used for any other purpose than implementation then the prior written permission of BSI must be obtained.

Details and advice can be obtained from the Copyright and Licensing Manager. Tel: +44 (0)20 8996 7070 Email: copyright@bsigroup.com

BSI Group
Headquarters 389
Chiswick High Road,
London, W4 4AL, UK
Tel +44 (0)20 8996 9001
Fax +44 (0)20 8996 7001
www.bsigroup.com/
standards

Copyright British Standards Institution
Provided by IHS under license with BSI - Uncontrolled Copy
No reproduction or networking permitted without license from IHS
Not for Resale