BRITISH STANDARD

BS EN 1857:2010

Chimneys — Components — Concrete flue liners

ICS 91.060.40; 91.100.30

NO COPYING WITHOUT BSI PERMISSION EXCEPT AS PERMITTED BY COPYRIGHT LAW

British Standards

National foreword

This British Standard is the UK implementation of EN 1857:2010. It supersedes BS EN 1857:2003+A1:2008 which is withdrawn.

The UK participation in its preparation was entrusted to Technical Committee B/506/4, Chimneys and their components having inner linings of concrete.

A list of organizations represented on this committee can be obtained on request to its secretary.

This publication does not purport to include all the necessary provisions of a contract. Users are responsible for its correct application.

Compliance with a British Standard cannot confer immunity from legal obligations.

This British Standard was published under the authority of the Standards Policy and Strategy Committee on 30 June 2010

© BSI 2010

ISBN 978 0 580 63308 9

Amendments/corrigenda issued since publication

Date	Comments

EUROPEAN STANDARD

NORME EUROPÉENNE

EUROPÄISCHE NORM

EN 1857

April 2010

ICS 91.060.40

Supersedes EN 1857:2003+A1:2008

English Version

Chimneys - Components - Concrete flue liners

Conduits de fumée - Composants - Conduits intérieurs en béton

Abgasanlagen - Bauteile - Betoninnenrohre

This European Standard was approved by CEN on 20 February 2010.

CEN members are bound to comply with the CEN/CENELEC Internal Regulations which stipulate the conditions for giving this European Standard the status of a national standard without any alteration. Up-to-date lists and bibliographical references concerning such national standards may be obtained on application to the CEN Management Centre or to any CEN member.

This European Standard exists in three official versions (English, French, German). A version in any other language made by translation under the responsibility of a CEN member into its own language and notified to the CEN Management Centre has the same status as the official versions.

CEN members are the national standards bodies of Austria, Belgium, Bulgaria, Croatia, Cyprus, Czech Republic, Denmark, Estonia, Finland, France, Germany, Greece, Hungary, Iceland, Ireland, Italy, Latvia, Lithuania, Luxembourg, Malta, Netherlands, Norway, Poland, Portugal, Romania, Slovakia, Slovenia, Spain, Sweden, Switzerland and United Kingdom.

EUROPEAN COMMITTEE FOR STANDARDIZATION
COMITÉ EUROPÉEN DE NORMALISATION
EUROPÄISCHES KOMITEE FÜR NORMUNG

Management Centre: Avenue Marnix 17, B-1000 Brussels

© 2010 CEN All rights of exploitation in any form and by any means reserved worldwide for CEN national Members.

Ref. No. EN 1857:2010: E

Contents

Page

Foreword 5
1 Scope 6
2 Normative references 6
3 Terms and definitions 6
4 Materials 8
4.1 General 8
4.2 Reaction to fire 8
5 Reinforcement for handling 8
6 Surface treatment 8
7 Tolerances 8
7.1 Size 8
7.2 Straightness 9
7.3 Squareness of ends 9
8 Performance requirements 9
8.1 Heat stress resistance 9
8.2 Heat shock resistance 10
8.3 Gas tightness 10
8.4 Abrasion resistance 11
8.5 Compressive strength 11
8.6 Corrosion resistance 11
8.7 Condensate resistance 12
8.8 Bulk density 12
8.9 Thermal resistance 12
8.10 Freeze/thaw resistance 12
8.11 Flow resistance 12
8.11.1 Flow resistance of flue liners 12
8.11.2 Flow resistance of fittings 12
8.12 Dangerous substances 12
9 Designation 12
9.1 Designations and classes 12
9.1.1 General 12
9.1.2 Temperature class 13
9.1.3 Pressure class 13
9.1.4 Resistance to fire class 13
9.1.5 Condensate resistance class 14
9.1.6 Corrosion resistance class 14
9.2 Designation system 14
10 Marking 15
11 Product information 15
12 Evaluation of conformity 16
12.1 General 16
12.2 Initial type testing 16
12.3 Further type tests 16
12.4 Factory production control 16
Annex A (normative) **Test methods** 18

A.1 Measurement of dimensions ... 18
A.1.1 Transverse dimensions ... 18
A.1.2 Declared height ... 18
A.1.3 Wall thickness ... 18
A.2 Straightness test ... 18
A.2.1 Apparatus ... 18
A.2.2 Procedure ... 18
A.2.3 Result ... 19
A.3 Squareness of ends test ... 19
A.3.1 Apparatus ... 19
A.3.2 First procedure ... 19
A.3.3 Result of first procedure ... 19
A.3.4 Result of second procedure ... 19
A.3.5 Result ... 20
A.4 Heat stress resistance and heat shock test ... 20
A.4.1 Apparatus ... 21
A.4.2 Test assembly ... 21
A.4.3 Test environment and conditioning ... 21
A.4.4 Procedure ... 22
A.5 Thermal resistance ... 25
A.5.1 Test assembly ... 25
A.5.2 Test procedure ... 25
A.5.3 Results ... 26
A.6 Gas tightness test ... 26
A.6.1 Apparatus ... 26
A.6.2 Test environment and conditioning ... 27
A.6.3 Procedure ... 27
A.6.4 Test result ... 28
A.7 Abrasion resistance test ... 28
A.7.1 Test assembly ... 28
A.7.2 Preparation ... 29
A.7.3 Test brush ... 29
A.7.4 Test procedure ... 29
A.7.5 Test result ... 29
A.8 Compressive strength test ... 29
A.8.1 Apparatus ... 29
A.8.2 Preparation of test sample ... 29
A.8.3 Test procedure ... 30
A.9 Corrosion and condensate resistance test ... 30
A.9.1 Test apparatus ... 30
A.9.2 Test solution ... 32
A.9.3 Test assembly ... 32
A.9.4 Conditioning ... 32
A.9.5 Test procedure ... 32
A.9.6 Test results ... 33
A.10 Bulk density ... 33
A.10.1 Apparatus ... 33
A.10.2 Procedure ... 33
A.10.3 Test result ... 33
A.11 Ultimate compressive strength ... 34
A.11.1 Test procedure ... 34
A.11.2 Result ... 34

Annex B (informative) **Illustration of joint types** ... 35

Annex C (normative) **Thermal resistance calculation** ... 36
C.1 Thermal resistance of the individual element ... 36
C.2 Thermal resistance of the flue liner ... 36

Annex D (normative) **Requirements of sampling plan in accordance with ISO 2859-1 at an Acceptable Quality Level (AQL) and inspection level S2 Inspection procedure** ... 38

D.1 Acceptability determination ... 38
D.1.1 General ... 38
D.1.2 Single sampling ... 38
D.1.3 Double sampling ... 38
D.2 Normal inspection ... 38
D.3 Normal ... 40
D.4 Reduced to normal inspection ... 41
D.5 Tightened inspection ... 41
D.6 Tightened to normal inspection ... 41
D.7 Discontinuation of inspection ... 41

Annex E (informative) **Recommended test sequence** ... 42

Annex F (informative) **Abbreviated designations for common types of concrete flue liners** ... 43

Annex ZA (informative) **Clauses of this European Standard addressing the provisions of the EU Construction Products Directive** ... 44
ZA.1 Scope and relevant characteristics ... 44
ZA.2 Procedure of attestation of conformity of concrete flue liners ... 45
ZA.2.1 System of attestation of conformity ... 45
ZA.2.2 EC Certificate and Declaration of conformity ... 46
ZA.3 CE Marking and labelling ... 47

Bibliography ... 49

Foreword

This document (EN 1857:2010) has been prepared by Technical Committee CEN/TC 166 “Chimneys”, the secretariat of which is held by UNI.

This European Standard shall be given the status of a national standard, either by publication of an identical text or by endorsement, at the latest by October 2010, and conflicting national standards shall be withdrawn at the latest by October 2010.

Attention is drawn to the possibility that some of the elements of this document may be the subject of patent rights. CEN [and/or CENELEC] shall not be held responsible for identifying any or all such patent rights.

This document supersedes EN 1857:2003+A1:2008.

This document has been prepared under a mandate given to CEN by the European Commission and the European Free Trade Association, and supports essential requirements of EU Directive(s).

For relationship with EU Directive(s), see informative Annex ZA, which is an integral part of this document.

This standard is one of a series of standards dealing with the specification, design, testing and execution of chimneys with concrete liners, both single and multi wall.

The co-ordinated package of standards is further divided by material of construction and this European Standard is one of a series of specifications and installation documents dealing with design and installation of concrete chimney products and systems.

The standards in this series for concrete chimney products are:

— EN 1857, *Chimneys — Components — Concrete flue liners*

— EN 1858, *Chimneys — Components — Concrete flue blocks*

— EN 12446, *Chimneys — Components — Concrete outer wall elements*

In this European Standard, Annexes A, C and D are normative and Annexes B, E, F and ZA are informative.

According to the CEN/CENELEC Internal Regulations, the national standards organizations of the following countries are bound to implement this European Standard: Austria, Belgium, Bulgaria, Croatia, Cyprus, Czech Republic, Denmark, Estonia, Finland, France, Germany, Greece, Hungary, Iceland, Ireland, Italy, Latvia, Lithuania, Luxembourg, Malta, Netherlands, Norway, Poland, Portugal, Romania, Slovakia, Slovenia, Spain, Sweden, Switzerland and the United Kingdom.

1 Scope

This European Standard specifies the material, dimensional and performance requirements, including methods of test, for precast concrete flue liners and fittings with or without insulation for the construction of multi-wall chimneys.

This document does not cover:

— high positive pressure (H) designated products;

— products designated wet (W) in conjunction with corrosion class 3.

This document also applies to storey-height and flue liners reinforced only for handling.

NOTE 1 Any reference to the term flue liners implies both flue liners and their fittings, except where otherwise indicated.

NOTE 2 The pressure classes and corrosion classes are defined in EN 1443.

2 Normative references

The following referenced documents are indispensable for the application of this document. For dated references, only the edition cited applies. For undated references, the latest edition of the referenced document (including any amendments) applies.

EN 1443:2003, *Chimneys — General requirements*

EN 1859, *Chimneys — Metal chimneys — Test methods*

EN 10088-2:2005, *Stainless steels — Part 2: Technical delivery conditions for sheet/plate and strip of corrosion resisting steels for general purposes*

EN 10218-2, *Steel wire and wire products — General — Part 2: Wire dimensions and tolerances*

EN 13216-1, *Chimneys — Test methods for system chimneys — Part 1: General test methods*

EN 13384-1:2002+A2:2008, *Chimneys — Thermal and fluid dynamic calculation methods — Part 1: Chimneys serving one appliance*

EN 14297:2004, *Chimneys — Freeze-thaw resistance test method for chimney products*

EN ISO 7500-1:2004, *Metallic materials — Verification of static uniaxial testing machines — Part 1: Tension/compression testing machines — Verification and calibration of the force-measuring system (ISO 7500-1:2004)*

ISO 2859-1, *Sampling procedures for inspection by attributes — Part 1: Sampling schemes indexed by acceptance quality limit (AQL) for lot-by-lot inspection*

3 Terms and definitions

For the purposes of this document, the terms and definitions given in EN 1443:2003 and the following apply.

3.1
concrete
material formed by mixing cement, coarse and fine aggregate and water, with or without the incorporation of admixtures and additions, which develops its properties by hydration of the cement

[EN 206-1:2000]

3.2
flue liner bend
flue liner that changes the direction of the flue

3.3
manufacturer's declared internal transverse dimensions
internal dimensions of the flue liner measured perpendicular to the longitudinal axis

3.4
manufacturer's declared height
internal height of the flue liner

NOTE Examples of measurement are shown in Figure 1.

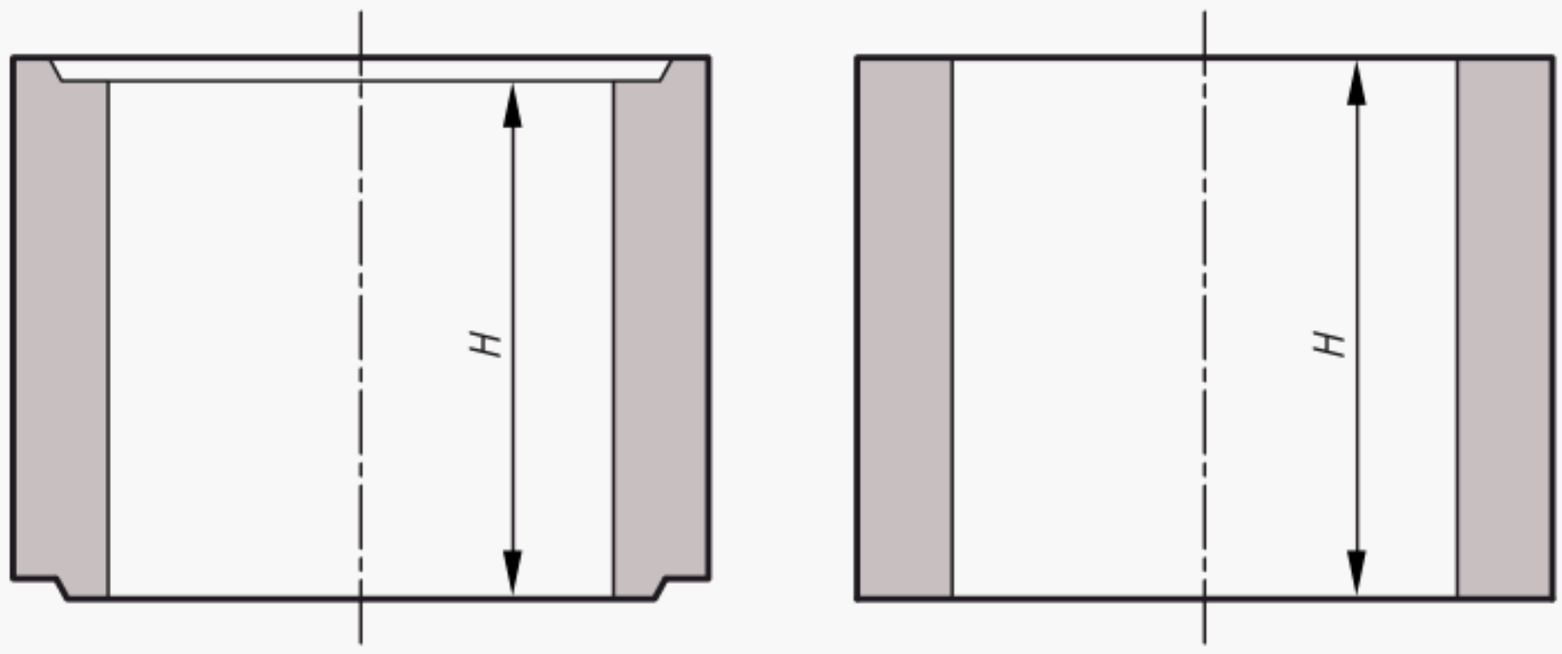

a) With rebate **b) With plain end**

Key
H internal height

Figure 1 — Manufacturer's declared height

3.5
manufacturer's declared structural height
maximum height of construction of the flue liners as declared by the manufacturer

3.6
precast concrete
concrete that is cast in a place other than its final location of use

3.7
reinforced flue liner
flue liner having reinforcement to assist handling

NOTE The reinforcement is not for structural stability.

3.8
storey-height liner
flue liner having manufacturer's declared height relating to the floor to floor height of a building

4 Materials

4.1 General

Flue liners shall be precast concrete.

Materials used shall be documented for factory production control purposes.

NOTE Additions may include glass or steel fibres.

4.2 Reaction to fire

In accordance with Commission Decision 96/603/EC, as amended, flue liners to this standard are classified as reaction to fire class A1 without test provided they contain not more than a mass or volume fraction of 1 % (whichever is the more onerous) of homogeneously distributed organic materials.

5 Reinforcement for handling

5.1 Where a liner is reinforced for handling the reinforcement shall have a maximum diameter of 8 mm and a minimum concrete cover of 15 mm on all sides for temperature classes up to and including T250 and a minimum concrete cover of 20 mm on all sides for all other temperature classes.

5.2 In reinforced liners having a bulk density of less than 2 000 kg/m^3, when measured in accordance with A.10, any reinforcement shall be protected against corrosion by:

a) use of stainless steel conforming to the requirements of EN 10088-2; or

b) by completely covering any mild steel reinforcement conforming to EN 10218-2 with a coating (e.g. typically Portland cement CEM I or CEM II mixed with water to form a slurry or epoxy resin).

6 Surface treatment

Any surface treatment of the flue liner, e.g. coatings, shall be factory applied before the product is tested.

7 Tolerances

7.1 Size

Tolerances on manufacturer's declared dimensions, including taper, shall be:

a) Declared internal transverse dimensions:

   1) below 300 mm ± 3 mm;

   2) 300 mm and above ± 3 % but not more than 10 mm (see A.1.1);

b) Declared height:

   1) below 300 mm ± 5 mm;

   2) 300 mm to 700 mm ± 7 mm;

   3) above 700 mm ± 3 % but not more than 10 mm (see A.1.2);

c) Declared wall thickness:

1) below 10 mm $^{+2}_{-1}$ mm;

2) 10 mm to 40 mm $^{+5}_{-1,5}$ mm;

3) above 40 mm $^{+12}_{-5}$ %.

7.2 Straightness

7.2.1 When tested as in accordance with A.2 the limit deviation from straightness of a straight concrete flue liner of manufacturer's declared height less than or equal to 1 000 mm shall not be greater than 1 % of the declared height.

7.2.2 When tested as described in A.2 for flue liners having a manufacturer's declared height greater than 1 000 mm the limit deviation shall not be greater than 0,5 % of the manufacturer's declared height.

7.3 Squareness of ends

When the deviation of the squareness of ends is tested in accordance with either procedure described in A.3 the flue liner shall not touch the upright for the first procedure and the dimension "G" shall not be greater than 5 mm for the second procedure.

8 Performance requirements

8.1 Heat stress resistance

8.1.1 When a flue liner is tested in accordance with A.4 to the test temperature appropriate to the flue liner designation given in Table 1, the flue liner shall subsequently conform to the requirements of 8.3.

The thermal testing shall be carried out on one size of flue liner for each geometrical configuration, e.g. circular, rectangular, square, also for each material mix, method of manufacture and wall thickness. For circular flue liners the size to be tested shall be (200 ± 50) mm internal transverse dimension. For other geometrical configurations the flue liner shall have an equivalent cross-sectional area.

Table 1 — Heat stress test temperature

Temperature class	Temperature of flue gas °C
T 600	$700\ ^{+50}_{0}$
T 450	$550\ ^{+50}_{0}$
T 400	$500\ ^{+50}_{0}$
T 300	$350\ ^{+35}_{0}$
T 250	$300\ ^{+30}_{0}$
T 200	$250\ ^{+25}_{0}$
T 160	$190\ ^{+19}_{0}$
T 140	$170\ ^{+17}_{0}$
T 120	$150\ ^{+15}_{0}$
T 100	$120\ ^{+12}_{0}$
T 080	$100\ ^{+10}_{0}$

8.1.2 Flue liner bends or fittings made of the same material mix and by the same method of manufacture as the tested straight flue liner shall be deemed to conform to the requirement in 8.1.1.

8.1.3 Flue liner bends or fittings made of a different material mix or using a different method of manufacture from those described in 8.1.1, shall be checked for heat stress resistance by testing a straight test sample in accordance with 8.1.1.

This straight test sample shall be made using the same material mix and manufacturing method as the bend or fitting.

8.2 Heat shock resistance

8.2.1 Following the heat stress resistance test in 8.1, when a liner designated as sootfire resistant is tested as described in A.4 to a flue gas temperature of 1 000 °C for a period of (30 ± 1) min the flue liner shall subsequently conform to the requirements of 8.3.

8.2.2 Flue liner bends or fittings made of the same material mix and by the same method of manufacture as the tested straight flue liner shall be deemed to conform to the requirement in 8.2.1.

8.2.3 Flue liner bends or fittings made of a different material mix or using a different method of manufacture from those described in 8.2.1, shall be checked for heat shock by testing a straight test sample in accordance with 8.2.1. This straight test sample shall be made using the same material mix and manufacturing method as the bend or fitting.

8.3 Gas tightness

When tested in accordance with A.6 the gas tightness, expressed as a leakage rate of the walls of the flue liner, shall not be greater than the values specified in Table 4 for the relevant pressure class.

8.4 Abrasion resistance

For flue liners which conform to the gas tightness requirements of 8.3, when tested as described in A.7 the weight of the deposit collected shall not exceed the values in Table 2, and shall subsequently conform to the gas tightness requirements of 8.3.

Table 2 — Abrasion resistance

Dry density kg/m³	**Maximum abrasion of inner surface in** kg/m²
1 000	1,000
1 100	1,100
1 200	1,200
1 300	1,300
1 400	1,400
1 500	1,500
1 600	1,600
1 700	1,700
1 850	1,850

8.5 Compressive strength

8.5.1 The manufacturer shall declare the structural height. When tested in accordance with A.8, flue liners and straight fittings shall withstand an intensity of loading equivalent to four times the manufacturer's declared structural height.

NOTE The manufacturer's declared structural height may be derived from the ultimate compressive strength determined by the method in A.11.

8.5.2 Flue liner bends or other fittings made of the same material mix and by the same method of manufacture as the tested straight flue liner shall be deemed to conform to the requirement in 8.5.1.

8.5.3 Flue liner bends or fittings made of a different material mix or using a different method of manufacture from those described in 8.5.2, shall be checked for compressive strength by testing a special straight test sample in accordance with 8.5.1.

This special straight test sample shall be made using the same material mix and manufacturing method as the bend or fitting.

8.6 Corrosion resistance

When flue liners designated condensate resistance class W (suitable for use in wet operating conditions) are tested as described in A.9, the weight loss of the pieces shall not be greater than 0,1 %.

Flue liners designated condensate resistance class D (dry) and which conform from 8.1 to 8.4 may be assigned corrosion resistance class 3.

8.7 Condensate resistance

When flue liners designated W (for use in wet operating conditions) are tested as described in A.9 the maximum mass of test solution passing through the wall of the flue liner during any 24 $^{+1}_{0}$ h test period shall not be greater than 0,5 g/h·m^2 of the flue liner external surface.

8.8 Bulk density

When flue liners are tested as described in A.10 each bulk density value shall be within a limit deviation of ± 10 % of the manufacturer's declared bulk density for the flue liner.

8.9 Thermal resistance

Thermal resistance shall be measured in accordance with the method given in A.5 or calculated in accordance with the method given in Annex C and its value declared by the manufacturer.

8.10 Freeze/thaw resistance

Where national regulations require freeze/thaw resistance of flue liners, they shall be tested in accordance with EN 14297. The product shall not present any damage of type 7, 8, 9 and 10 in accordance with EN 14297:2004, Table 1.

8.11 Flow resistance

8.11.1 Flow resistance of flue liners

The manufacturer shall declare the mean value of roughness for a flue liner determined either:

— by testing in accordance with EN 13216-1 (which is the reference test method); or

— from the data obtained in EN 13384-1:2002+A2:2008.

8.11.2 Flow resistance of fittings

The manufacturer shall declare the coefficient of flow resistance due to a directional and/or cross sectional and/or mass flow change which shall be determined in accordance with the method given in EN 1859 or obtained from the data in EN 13384-1:2002+A2:2008.

8.12 Dangerous substances

Materials used in products shall not release any dangerous substances in excess of the maximum permitted levels specified in a relevant European Standard for the material or permitted in the national regulations of the member state of destination.

NOTE See Note 2 in ZA.1.

9 Designation

9.1 Designations and classes

9.1.1 General

Designation classes for flue liners for temperature, pressure, resistance to sootfire, condensate resistance and corrosion resistance shall be in accordance with 9.1.2 to 9.1.6.

Flue liners shall be designated in accordance with the system given in 9.2.

9.1.2 Temperature class

Temperature classes in relation to nominal working temperature are given in Table 3.

Table 3 — Temperature class

Temperature class	Nominal working temperature °C
T600	≤ 600
T450	≤ 450
T400	≤ 400
T300	≤ 300
T250	≤ 250
T200	≤ 200
T160	≤ 160
T140	≤ 140
T120	≤ 120
T100	≤ 100
T080	≤ 80

9.1.3 Pressure class

Pressure classes in relation to test pressure and gas tightness are given in Table 4.

The pressure class is assigned a gas tightness level, expressed as a maximum leakage rate at a specified test pressure. For flue liners suitable for negative pressure chimneys the pressure classes are N1 and N2. For flue liners suitable for positive pressure chimneys the pressure classes are P1 and P2.

Table 4 — Pressure classes and gas tightness

Pressure class	Test pressure Pa	Gas tightness – Maximum leakage rate $l/s/m^2$
N1	40	2,0
N2	20	3,0
P1	200	0,006
P2	200	0,120

9.1.4 Resistance to fire class

Resistance to fire classes are designated as:

— O for flue liners for chimneys without sootfire resistance;

— G for flue liners for chimneys with sootfire resistance.

9.1.5 Condensate resistance class

Condensate resistance are designated as:

— W for flue liners for chimneys intended to operate under wet conditions;

— D for flue liners for chimneys intended to operate under dry conditions.

9.1.6 Corrosion resistance class

Corrosion resistance classes for flue liners for chimneys which convey products of combustion from gas or light oils and natural wood or heavy oils and solid mineral fuels, are given in Table 5.

Table 5 — Corrosion resistance classes

Fuel types	1 possible fuel types	2 possible fuel types	3 possible fuel types
gas	gas: sulfur-content ≤ 50 mg/m^3 natural gas L + H	gas natural gas L + H	gas natural gas L + H
liquid	kerosene: sulfur-content ≤ 50 mg/m^3	oil: sulfur-content ≤ 0,2 mass % kerosene: sulfur-content > 50 mg/m^3	oil: sulfur-content > 0,2 mass % kerosene: sulfur-content > 50 mg/m^3
wood		wood in open fire places	wood in open fire places wood in closed stoves
coal			coal
peat			peat

NOTE Table 5 does not categorize process gases or liquids.

9.2 Designation system

All concrete flue liners to this standard shall be designated in accordance with 9.1. An example of a designation system is given in Figure 2.

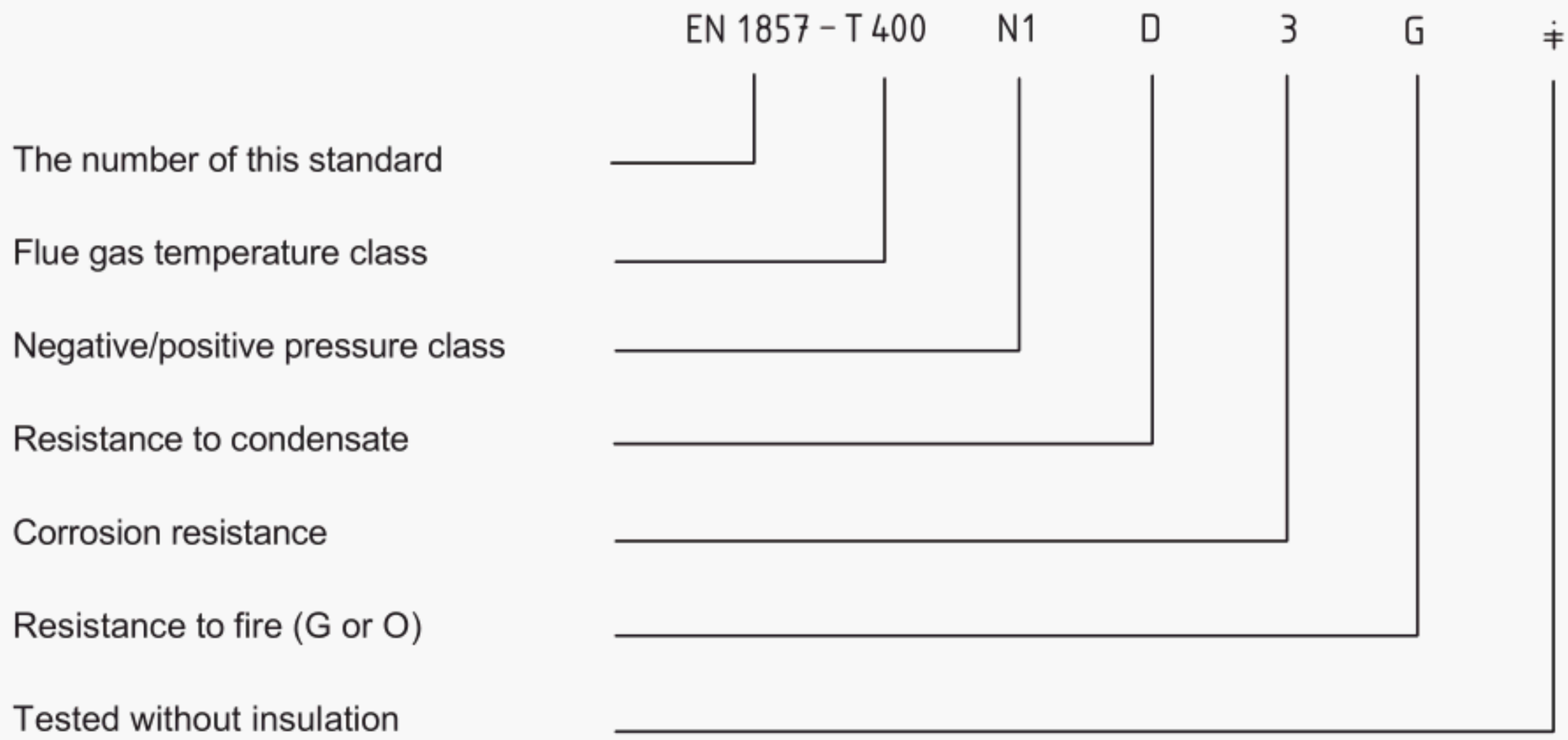

Figure 2 — Examples of designation system

A shortened designation code is given in Annex F.

10 Marking

A minimum of 20 % of flue liners or fittings in each consignment shall be legibly and indelibly marked or labelled with the following information:

— name or trademark of the manufacturer;

— manufacturer's batch or date code;

— number of this European Standard;

— class or classes or full designation;

— an arrow indicating direction of flue gas flow.

NOTE For CE marking and labelling, see ZA.3.

11 Product information

The manufacturer's printed literature for the product shall include the following:

a) manufacturer's product description;

b) manufacturer's declared sizes;

c) product designation;

d) manufacturer's declared structural height;

e) detailed installation instructions including method of jointing.

NOTE For CE marking requirements for information on the product, see ZA.3.

12 Evaluation of conformity

12.1 General

The compliance of the concrete flue liners with the requirements of this standard and with the stated values (including classes) shall be demonstrated by:

— initial type testing;

— factory production control by the manufacturer, including product assessment.

12.2 Initial type testing

Type test relating to material composition shall be performed initially together with factory production control tests as given in Table 6. One test shall be carried out for each requirement.

The thermal testing shall be carried out on one size of flue liner for each geometrical configuration, e.g. circular, square, rectangular. For circular flue liners, the size to be tested shall be (200 ± 50) mm internal diameter. For other geometrical configurations, the flue liner shall have an equivalent cross-sectional area range.

12.3 Further type tests

Type tests shall be performed when a change is made either in material composition, processing technique or to the design or method of manufacture of the flue liner, but they may be performed more frequently by incorporation into a plan for monitoring the consistency of manufacture (see Table 6).

Table 6 — Factory production control and type tests

Item	Relevant requirement clauses	
	Factory production control 12.3 [a]	Type tests 12.1 and 12.2
Straight flue liners	4.1; 5; 6; 7.1, 7.2; 7.3; 8.3; 8.5 and 8.8	8.1; 8.2; 8.3; 8.4; 8.5; 8.6; 8.7; 8.8; 8.9; 8.10; 8.11 and 8.12

[a] The tests carried out during FPC are intended to verify that the performance requirements assessed through the initial type testing are maintained.

12.4 Factory production control

To achieve compliance with this standard, the manufacturer shall establish and maintain an effective documented quality system.

Factory production control tests are carried out following manufacture to monitor the quality of product (see Table 6).

Sampling and testing of any batch shall be completed prior to removal from the works and shall be in accordance with ISO 2859-1 at an AQL of 10 % and inspection level S2. Isolated batches of units shall be assessed in accordance with tightened inspection procedures, with a maximum batch size of 2 500 (see Annex D).

Batches rejected under the factory production control procedure may be resubmitted once, after removal of units with previously undetected visible defects, under the tightened inspection procedures, in respect only of the defect that caused initial rejection.

NOTE FPC systems which conform to EN ISO 9001:2008 are given a presumption of conformity with the Essential Requirements of European Directives.

Annex A
(normative)

Test methods

A.1 Measurement of dimensions

A.1.1 Transverse dimensions

The maximum and minimum internal transverse dimensions of the flue liner shall be those calculated from the manufacturer's declared tolerances and the tolerances specified in 7.1. If direct measurement is to be carried out, two measurements should be taken at the observed maximum and minimum diameters.

The test also can be carried out using two gauges whose diameters are set at the minimum and maximum diameters. The minimum gauge should be able to be turned through 360° within the whole length of the flue liner. The maximum gauge should not be able to enter the flue liner when turned through a rotation of 360°.

For square and rectangular flue liners, the internal transverse dimensions shall be measured between the mid points of opposite sides of the flue liner.

A.1.2 Declared height

The maximum and minimum declared heights of a flue liner shall be those calculated from the manufacturer's declared dimensions and the tolerances specified in 7.1. If direct measurement is to be carried out, two measurements should be taken at the observed maximum and minimum internal heights.

The test can also be carried out by using two gauges whose heights are set at the minimum and maximum internal heights. The minimum gauge should not be able to fit over the internal height of the flue liner. The maximum gauge should be able to fit over the internal height of the flue liner.

A.1.3 Wall thickness

The maximum and minimum wall thickness dimensions shall be those calculated from the manufacturer's declared dimensions and the tolerances specified in 7.1 or direct measurement is to be carried out at the observed maximum and minimum thickness.

A.2 Straightness test

A.2.1 Apparatus

A straightness measuring device, such as a straight edge, having a length 100 mm less than the nominal height of the flue liner under test.

A.2.2 Procedure

A.2.2.1 Place the measuring device along the line H_T as shown in Figure A.1.

A.2.2.2 Measure the maximum distance from the centre of the straight line created by the apparatus in A.2.1 spanning any concave curve on the outside of the flue liner to the flue liner surface (D_S) as shown in Figure A.1.

A.2.3 Result

Record any case where D_S is greater than 1 % or, in the case of liners equal to or greater than 1 000 mm in height, any case where D_S is greater than 0,5 % of the declared height.

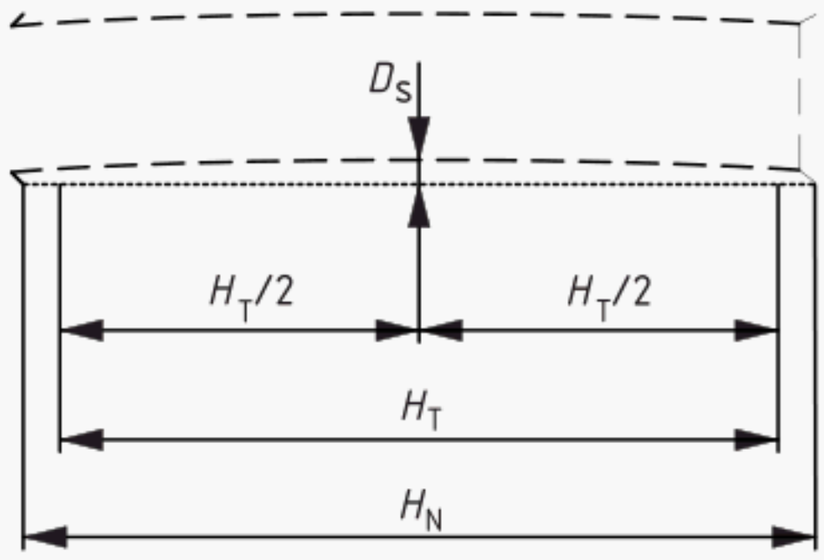

Key

H_N nominal length of the flue liner in millimetres

D_S deviation from straightness in millimetres

H_T test length in millimetres

H_N - H_T = 100 mm

Figure A.1 — Straightness test

A.3 Squareness of ends test

A.3.1 Apparatus

A.3.1.1 **Level test bench**, with a fixed upright at 90°, see Figure A.2a).

A.3.1.2 **Square**, having one arm 300 mm long and the second arm 400 mm long.

A.3.2 First procedure

Place the flue liner upright on the test bench with the base of the liner touching the collar. Rotate the liner through 360°.

A.3.3 Result of first procedure

Record any case where the flue liner touches the upright.

A.3.4 Result of second procedure

Place the flue liner upright on the test bench and apply one arm of the square along its side with the other arm touching the end of the liner. Rotate the square across the end of the liner as shown in Figure A.2b).

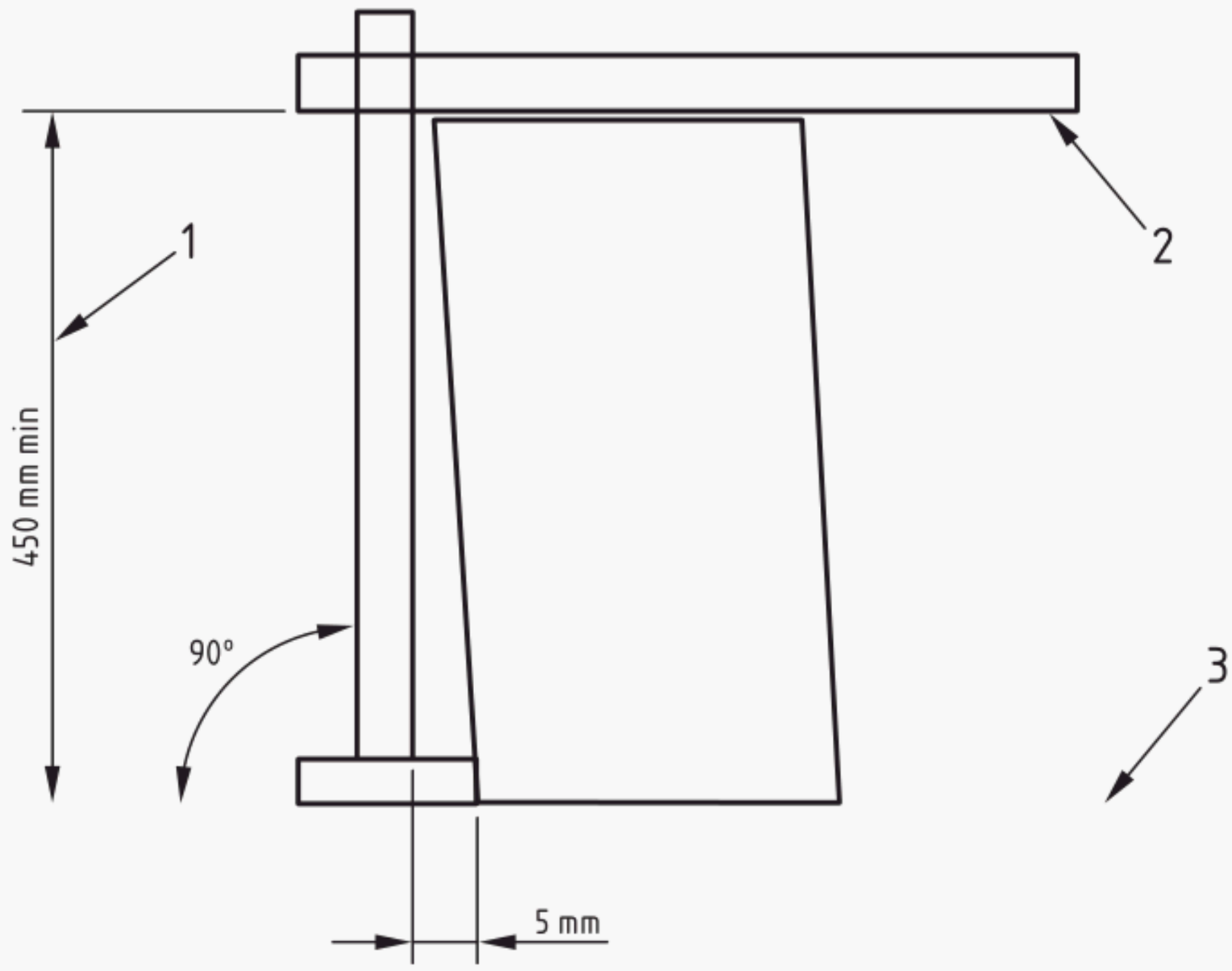

a) First procedure

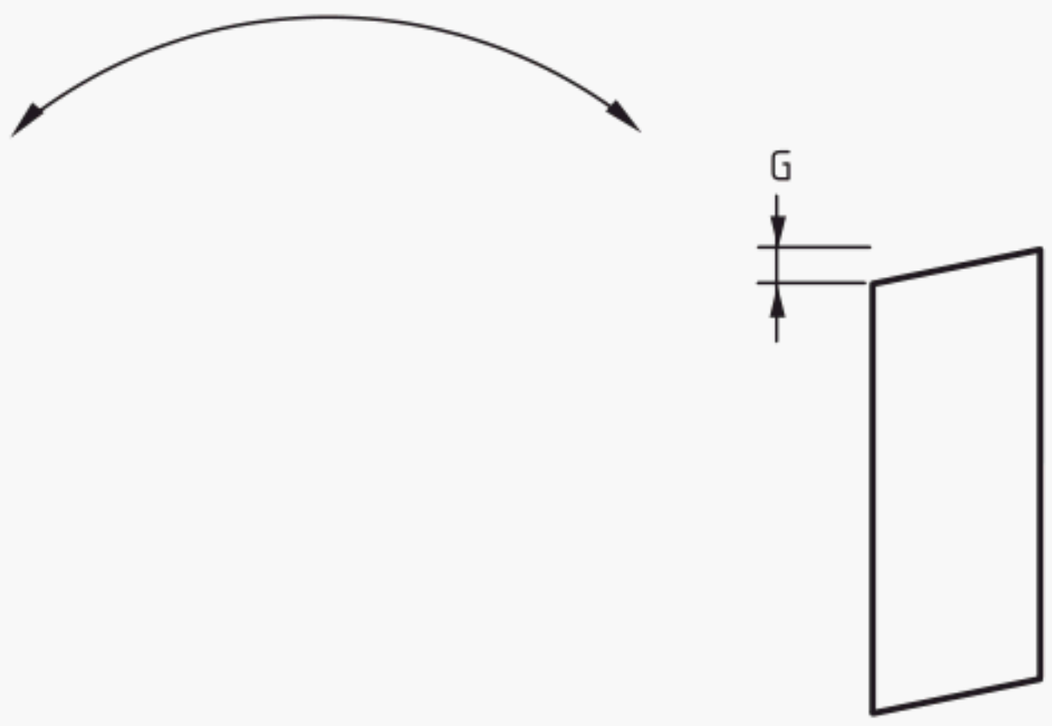

b) Second procedure

Key

1 adjustable height

2 adjustable cantilevered straight edge

3 level test surface

G deviation of squareness of ends

Figure A.2 — Apparatus for squareness test

A.3.5 Result

Record any case where the dimension at "G" exceeds 5 mm.

A.4 Heat stress resistance and heat shock test

NOTE The heat shock test is the method to assess the flue liner for sootfire resistance.

A.4.1 Apparatus

A heat generator capable of delivering completely combusted hot gas at the test temperature specified in Table 4, having a CO/CO_2 ratio not greater than 0,01, with the appropriate volume flow for the cross section specified in Table A.1.

The temperature of the products of combustion and the surface of the flue liner assembly shall be measured by a type K (Nickel-chromium/Nickel-aluminium) thermocouple, or similar, with an unsheathed junction located as shown in Figure A.3. The maximum deviations are ± 3 °C for temperatures up to 600 °C and ± 0,75 % for temperatures over 600 °C.

A.4.2 Test assembly

Construct a test assembly of liners containing a minimum of one complete liner and two joints for flue liners less than or equal to 1,0 m manufacturer's declared height to give a minimum overall height of 2,0 m jointed in accordance with the manufacturer's instructions. Flue liners of manufacturer's declared height greater than 1,0 m may be cut and the test assembly formed from two cut pieces, each having a height greater than 0,5 m and having only one joint near the centre of the assembly, jointed in accordance with the manufacturer's instructions.

For thermal testing (heat stress and heat shock) the flue liner shall be insulated with a flexible material having a thermal resistance of (0,4 ± 0,04) m^2 K/W at a temperature of 200 °C. The insulation material shall be capable of withstanding a temperature of $(1\,000\ ^{+50}_{0})$ °C.

If a flue liner is further designated "i" by the manufacturer, the flue liner shall be tested without insulation.

A.4.3 Test environment and conditioning

A.4.3.1 Test room

The test room shall provide the following conditions:

a) ambient air temperature: 15 °C up to 30 °C;

b) draughts into the test room: ≤ 0,5 m/s;

NOTE This requirement is assumed to be conformed to a closed room environment.

c) location of measurements: minimum height of 1,0 m above the floor and at least 1,0 m from the test room walls;

d) minimum distance between test chimneys and other structures (e.g. walls): 1,0 m;

e) free connecting space if the laboratory is divided in several levels.

These ambient air conditions are measured a maximum of 1,0 m from the test assembly.

Limit deviation of measurements shall be:

— ± 1,5 °C for the ambient temperature;

— ± 0,05 m/s for the velocity of draughts;

— ± 0,05 m for the distances.

A.4.3.2 Assembly conditioning

Condition the test assembly for a minimum of 28 days at ambient temperature unless otherwise specified by the manufacturer, then remove all loose materials by conducting 20 brush cycles as in A.7 and carry out a gas tightness test as in A.6.

A.4.3.3 Drying/conditioning phase

Unless otherwise specified by the manufacturer deliver flue gases into the test assembly in such a way that the temperature, measured as described in A.4.4, a), rises to 200 °C or the nominated test temperature whichever is the lower in (60 ± 5) min.

A.4.4 Procedure

a) Establish an Overall Temperature Distribution Factor (OTDF) not exceeding 1,05 by taking five measurements of temperature along two traverses at right angles across the section of the flue liner within 50 mm of the entry. The locations for temperature measurement shall be positioned in the flue in accordance with Figure A.3. Point E shall be central to the flue, points A to D shall be (20 ± 2) mm from the inner surface of the flue.

   The Overall Temperature Distribution Factor, OTDF is given by the equation:

$$OTDF = \frac{T_h}{T_m} \qquad \text{(A.1)}$$

   where

   T_h is the highest temperature at measuring points A to E;

   T_m is the average temperature at measuring points A to E.

b) Deliver completely combusted gas, in accordance with the velocity specified in Table A.1 extrapolated to the sample cross section, into the test sample and within 10 min, raise the temperature of the gas uniformly to the appropriate test temperature (see Table A.1) measured at the location giving the highest temperature as described in a). Values for gas velocity shall be interpolated for sizes between those in Table A.1 and extrapolated for larger values. The velocity for liners other than circular shall be determined on an equivalent hydraulic diameter basis.

c) Maintain the delivery of gas until the temperature of the outer surface of the mid point of the flue liner test assembly does not rise by more than 2 °C in 30 min (equilibrium) or to a maximum time of 4 h. The point of measurement shall be at the mid point of a complete flue liner near the centre of the assembly or at least 100 mm from a joint. For rectangular sections, the measurement shall be taken at the mid point of the longer side. Allow the test sample to cool to ambient without assistance, e.g. without forced ventilation.

d) For the heat shock test maintain the flue gas temperature at (1000^{+50}_{0}) °C for a period of (30 ± 1) min.

e) Subject the test sample to the test described in A.6.

Table A.1 — Hot gas velocity in metres per second (m/s) at test temperature

		Temperature class											
		T 080	T 100	T 120	T 140	T 160	T 200	T 250	T 300	T 400	T 450	T 600	Sootfire
		Test temperature/°C											
Pressure class	D in mm	100	120	150	170	190	250	300	350	500	550	700	1 000
Negative pressure	100	1,67	1,76	1,90	2,00	2,08	2,36	2,60	2,84	3,56	3,81	4,55	5,09
	120	1,68	1,77	1,91	2,00	2,10	2,38	2,62	2,86	3,59	3,83	4,58	5,58
	160	1,71	1,80	1,94	2,04	2,13	2,42	2,66	2,91	3,65	3,90	4,66	5,56
	200	1,74	1,84	1,99	2,08	2,18	2,48	2,72	2,97	3,73	3,98	4,76	5,41
Positive pressure	100	2,35	2,47	2,65	2,77	2,90	3,26	3,56	3,85	4,73	5,01	5,86	5,09
	120	2,39	2,52	2,71	2,83	2,95	3,32	3,62	3,93	4,82	5,11	5,98	5,58
	160	2,51	2,64	2,84	2,97	3,10	3,48	3,80	4,12	5,06	5,36	6,27	5,56
	200	2,66	2,80	3,01	3,15	3,29	3,70	4,03	4,37	5,36	5,69	6,65	5,41
High positive pressure	Not applicable												

NOTE The flow rates are for heat generation from natural gas combustion.

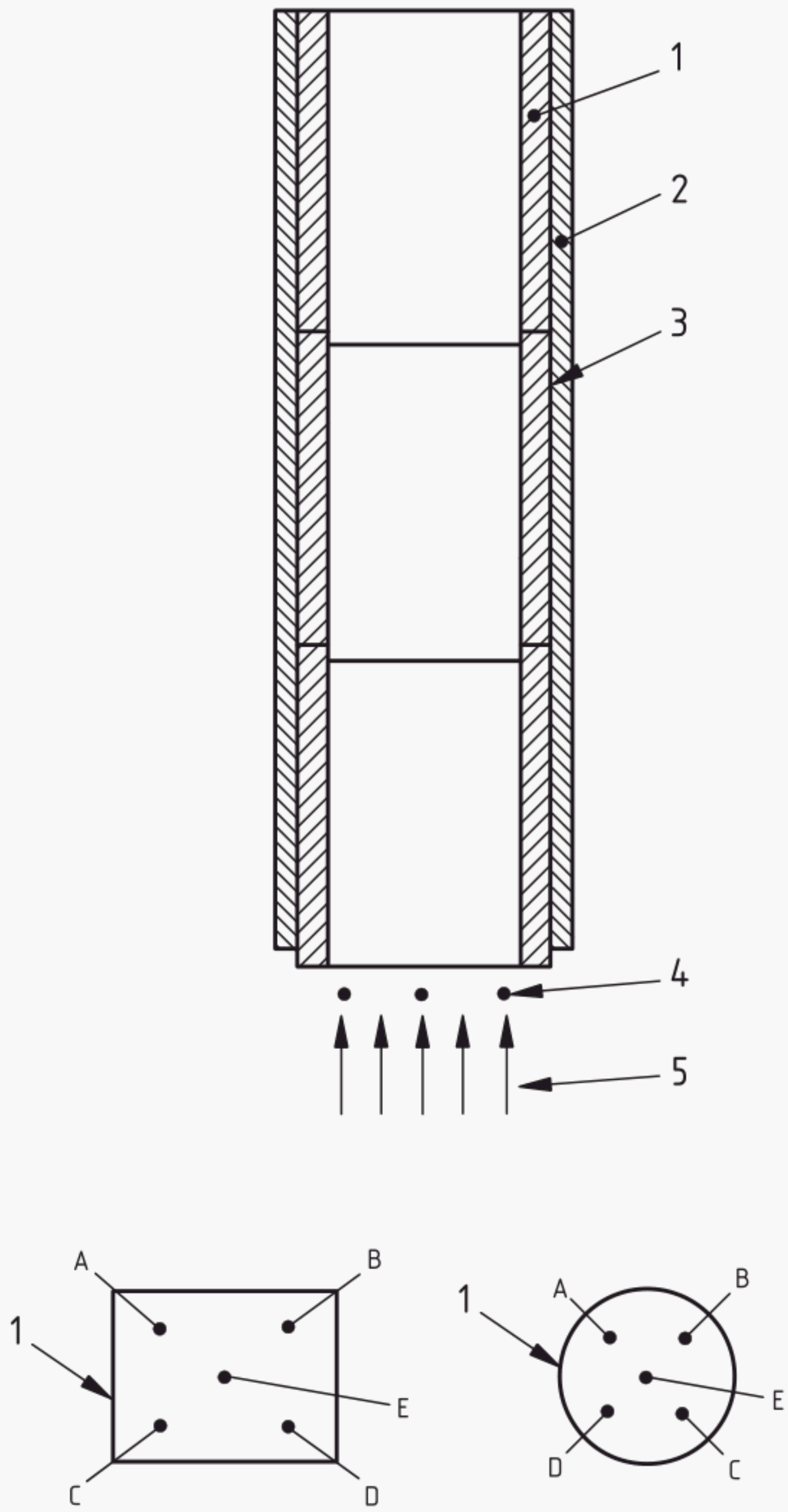

Key

1 flue liner assembly
2 insulation
3 outer surface of flue liner assembly
4 position of measurement points
5 flue gas entry
A, B, C, D, E positions for temperature measurements for OTDF (see A.4.4, a))

Figure A.3 — Temperature measuring points

A.5 Thermal resistance

A.5.1 Test assembly

Use a test assembly consisting of two fans, two electric heaters and interconnecting tubes so that heated air can pass around the test assembly. A schematic diagram is given in Figure A.4. Install in each arm of the test assembly a minimum of 2 m of test chimney sections including at least two joints.

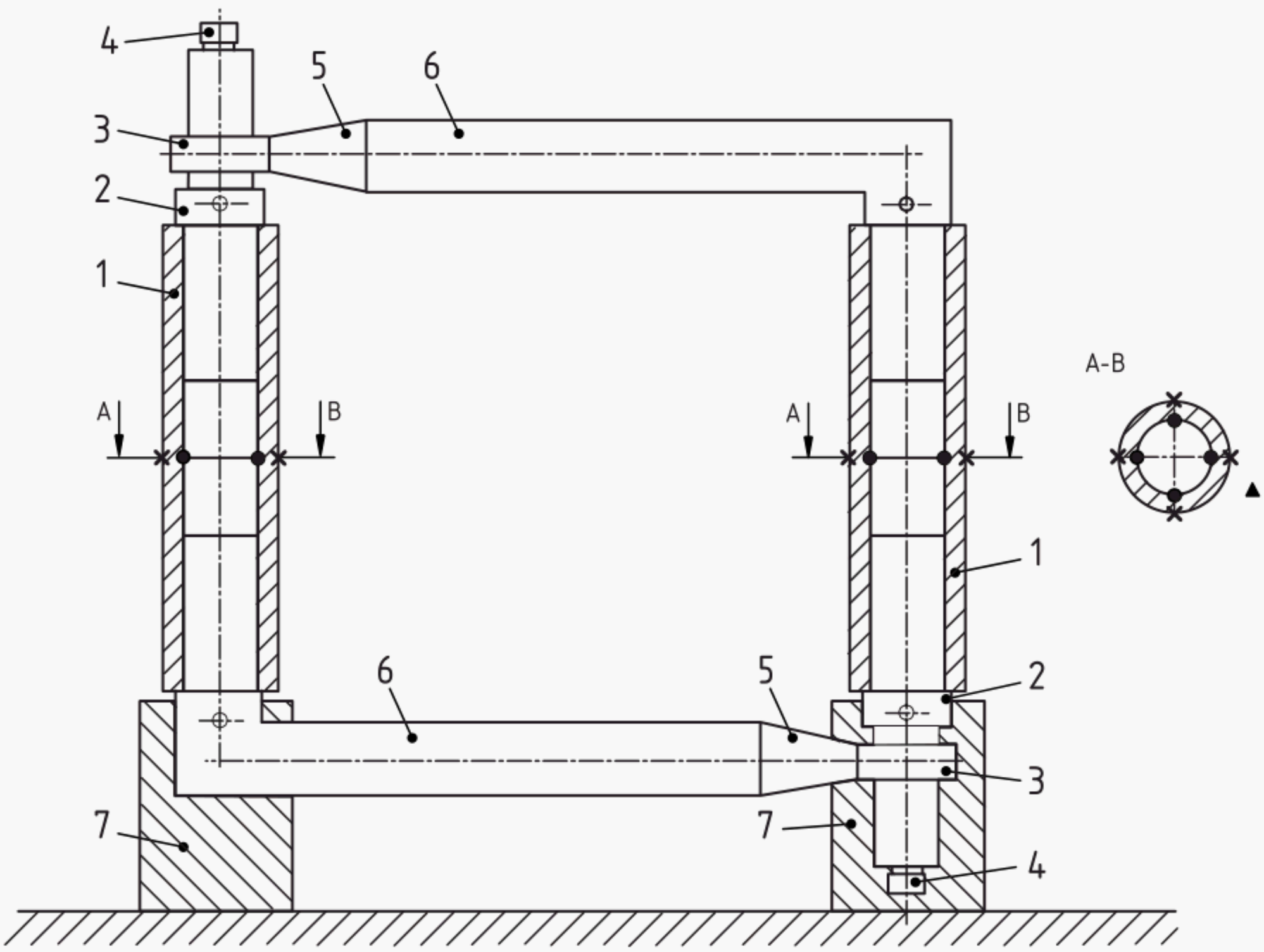

Key

1 test chimney
2 flow rectifier
3 radial ventilator
4 electric motor
5 electric heating unit
6 joint pipe
7 test stand

measuring points for temperature, pressure and velocity of circulating air

• internal surface temperatures
× external surface temperatures
▲ ambient air temperature
○ pressure and velocity

Figure A.4 — Thermal resistance apparatus

A.5.2 Test procedure

Circulate hot gas around the test assembly. The velocity of the hot gas shall be a minimum of 4 m/s and the hot gas temperature at the ends of the test sections measured within 100 mm of the ends of the liner with the test section shall not differ by more than 10 °C. For negative pressure chimneys maintain the pressure in the test chimney between 0 Pa and - 10 Pa.

Measure the internal and external surface temperature of the chimney sections as specified in A.4.1. For chimneys designated suitable for wet conditions, the hot gas shall be water vapour saturated and shall have a heat content and temperature so that the inner surface reaches a temperature of 70 °C. For chimneys designated suitable for dry conditions, the hot gas shall have a heat content and temperature so that the inner surface reaches a temperature of 20 % below the designated temperature (nominal working temperature), but not more than 200 °C. Adjust the temperature and heat content of the hot gas until equilibrium conditions exist. Equilibrium is reached when the difference between the outer surface temperature of the chimney sections and ambient temperature does not change by more than 1 % in 60 min.

Undertake the test twice with one temperature rise from a lower temperature level and one drop from a higher level.

Reassemble the test assembly without the test chimney sections. Repeat the test as described before until the hot gas temperature is the same as during the tests with the chimney sections in place, and until equilibrium. Equilibrium is reached when the difference between the outer surface temperature of the chimney sections and ambient temperature does not change by more than 1 % in 3 h.

A.5.3 Results

For the assembly with two test arms calculate the thermal resistance, $\frac{1}{\lambda}$, in m²·K/W from the equation:

$$\frac{1}{\lambda} = \frac{A_i(t_i - t_0)}{Q_1 - Q_2} \qquad \text{(A.2)}$$

where

Q_1 is the total heat input with the chimney section, in watts;

Q_2 is the total heat input without the chimney section, in watts;

t_i is the inner surface temperature, in degrees Celsius;

t_0 is the outer surface temperature, in degrees Celsius;

A_i is the total inner surface area of the chimney, in square metres.

A.6 Gas tightness test

A.6.1 Apparatus

A.6.1.1 Test assembly as described in A.4.2, without the insulation. For sampling at the factory only one liner may be used.

A.6.1.2 A means of creating an air-tight seal at each end of the test flue assembly.

A.6.1.3 Two pieces of tubing passing through and sealed into one of the air-tight seals (see Figure A.5).

A.6.1.4 Fan, capable of producing at least the required test pressure in Table 4, a flow meter and a manometer shall be used. The air supply for the test shall be measured by a flow meter with an accuracy of ± 5 % of full scale. The full scale reading shall be approximately the flow rate for the maximum air permeability rate for the appropriate class of flue liner.

A.6.1.5 Pressure gauge capable of measuring a pressure to an accuracy of ± 5 %.

A.6.2 Test environment and conditioning

A.6.2.1 Test room

As A.4.3.1.

A.6.2.2 Assembly and conditioning

Condition the test assembly for a minimum of 28 days at ambient temperature unless otherwise specified by the manufacturer.

A.6.3 Procedure

A.6.3.1 Plug both ends of the test assembly with an air-tight seal. At one end insert two lengths of tubing (A.6.1.3), see Figure A.5.

A.6.3.2 Blow air through one of the tubes at a rate sufficient to achieve and maintain the pressure specified in 8.3 measured on the pressure gauge (A.6.1.5).

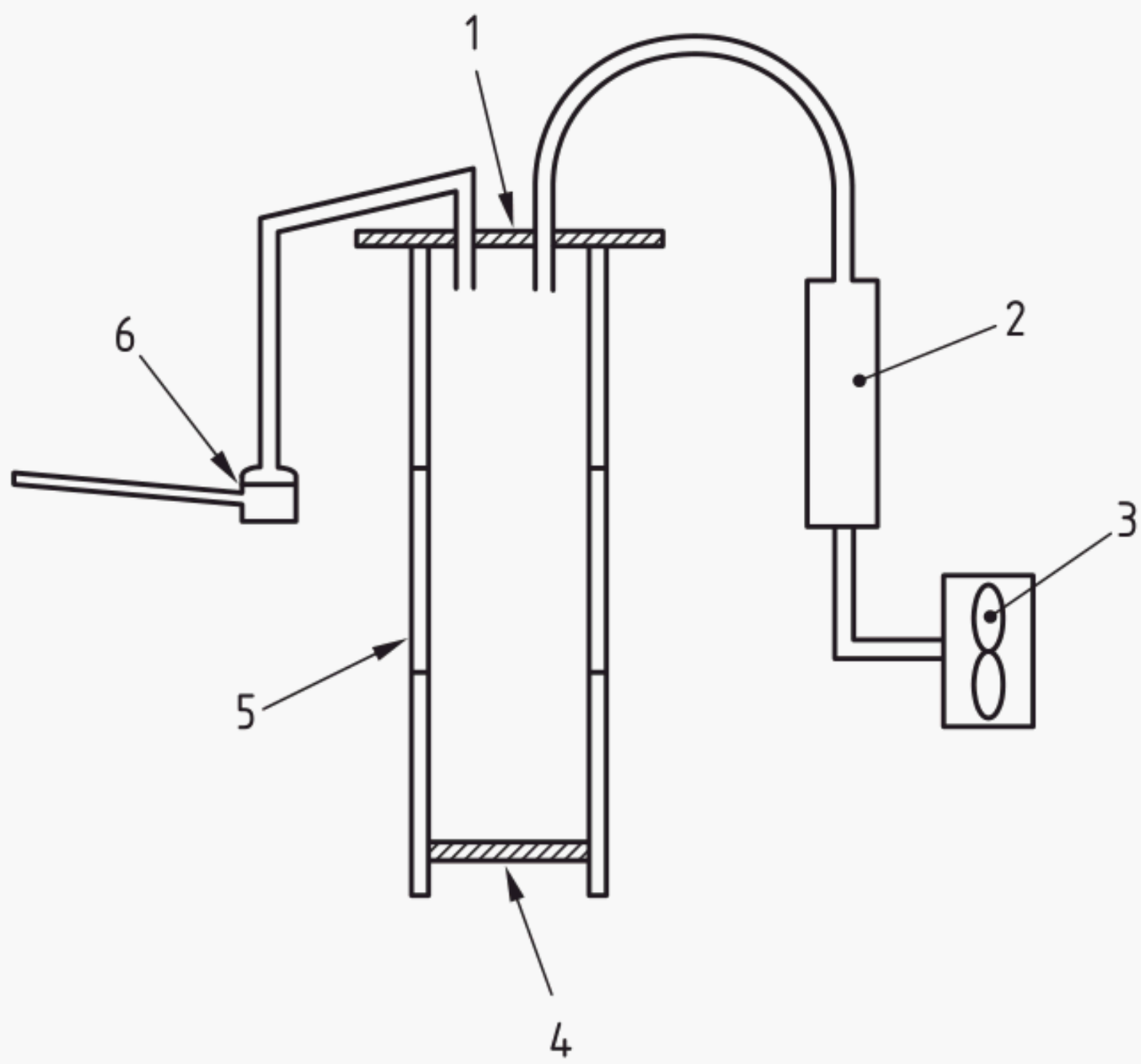

Key

1 seal
2 flow meter
3 fan
4 seal
5 jointed flue liners
6 pressure gauge

Figure A.5 — Gas tightness test apparatus

A.6.4 Test result

Calculate the gas tightness, E, of the assembly, in litres per second per square metre, using the equation:

$$E = \frac{Q}{S \times t} \tag{A.3}$$

where

Q is the air volume passing through the test assembly during test, in litres;

S is the inside surface area of the flue liner, in square metres;

T is the test duration, in seconds.

A.7 Abrasion resistance test

A.7.1 Test assembly

The assembly of flue liners as described in A.4.2 of 200 mm diameter (or closest size in manufacturer's range), which have been subjected to the heat stress and the shock test in accordance with their appropriate temperature group designation.

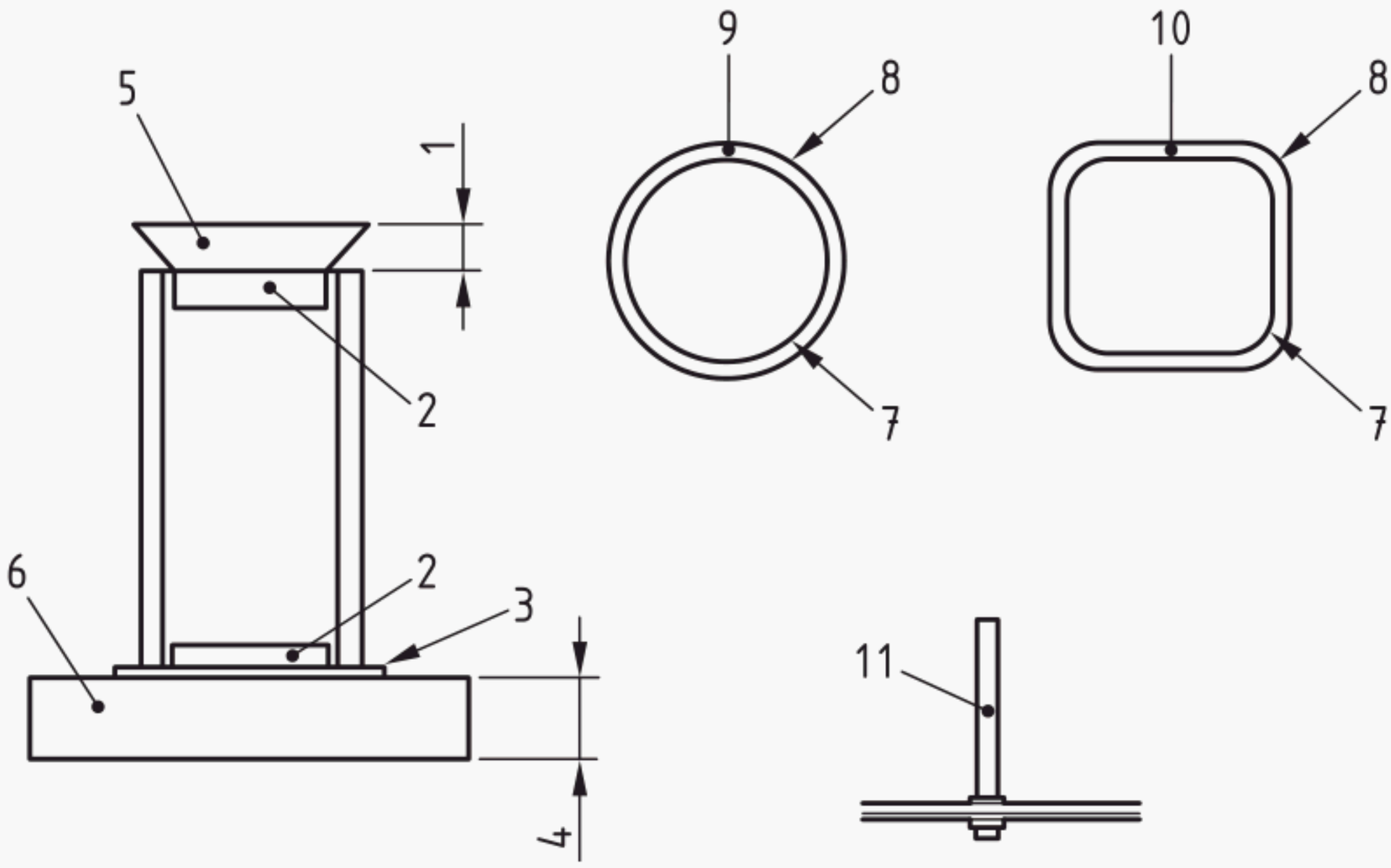

Key

1 height of funnel not less than 200 mm
2 tight fitting sleeve projecting 20 mm to 40 mm into opening
3 bottom plate attached to bottom sleeve
4 height sufficient to allow brush to pass through bottom of test assembly
5 catchment funnel attached to sleeve
6 collection box
7 plan of liner opening area
8 plan of brush area
9 round liner
10 square or rectangular liner
11 rod

Figure A.6 — Abrasion resistance test apparatus

A.7.2 Preparation

Fit a tight fitting metal sleeve attached to a catchment funnel into the top opening of the test flue. Fit a tight fitting metal sleeve attached to a plate which has an opening matching the area of the opening of the flue into the bottom of the test flue as shown in Figure A.6.

A.7.3 Test brush

If the manufacturer includes a specification for the sweeping brush in the maintenance instructions for the flue liner, the manufacturer's declared sweeping brush specification shall be used for the abrasion resistance test.

In the absence of a manufacturer's declared specification the sweeping brush shall have flat spring-steel bristles of stainless steel in accordance with EN 10088-2:2005, grade X9 CR NI 18-8, steel number 1.4310, with a cross section of (2,0 ± 0,1) mm × (0,3 ± 0,1) mm.

The overall dimension of the brush shall be (25 ± 5) mm greater than the internal dimensions of the flue. The bristles shall be arranged so that there are 5 mm per 10 mm length of the perimeter of the plan area of the brush. The brush shall be held securely between plates having a plan dimension (100 ± 5) mm less than the cross sectional internal transverse dimension of the flue being tested.

The brush shall be attached to a rod.

A.7.4 Test procedure

Pass the brush down through the total length of the test assembly at a rate of (0,4 ± 0,1) m/s and then at the same rate pull the brush up through the total length of the test assembly.

After constructing the test assembly as specified in A.4.2 the flue liners shall be conditioned by carrying out 20 brush cycles as in A.4.4, b). Any material dislodged during this conditioning phase shall be discarded.

After the heat stress resistance and heat shock test detailed in Clause 4 carry out a further 80 brush cycles collecting any dislodged material.

A.7.5 Test result

Record the weight of any material that has been dislodged from the internal surface of the test assembly and calculate the total area of the internal surface of the flue between the sleeves.

A.8 Compressive strength test

A.8.1 Apparatus

A machine having a verified accuracy as specified in class 3 of EN ISO 7500-1:2004, capable of applying the test load at the rate specified in A.8.3.

A.8.2 Preparation of test sample

A.8.2.1 Prepare a section of liner at least 150 mm in length, by sawing each end to produce flat and parallel ends, to within the tolerances specified in 7.3, square to the axis. If the samples are wet cut, condition by drying in an oven for 48 h ± 30 min at (70 ± 3) °C. For liners having external transverse dimensions greater than the test equipment capacity, cut by sawing a section as indicated in Figure A.7, and saw the upper and lower ends to produce flat and parallel ends, square to the axis. Dimension '*a*' shall be greater than three times the declared wall thickness.

A.8.2.2 Determine by calculation the gross cross sectional area of the section and the position of the vertical axis of the centre of the gravity of the test sample.

A.8.2.3 Prepare the ends of the sample with cement mortar (one part calcium aluminate cement and two parts ordinary Portland cement) to achieve flat and parallel end square to the axis. Allow 24 h to harden or more if specified by the manufacturer.

A.8.2.4 Place sample between the test plates so that the axis of the plates corresponds with the axis of the centre of gravity of the test sample, with a tolerance of 1 mm.

A.8.3 Test procedure

Apply a load without shock to the test sample and increase at a rate of (0,3 ± 0,05) MPa/s until the required load as specified in 8.5 is reached.

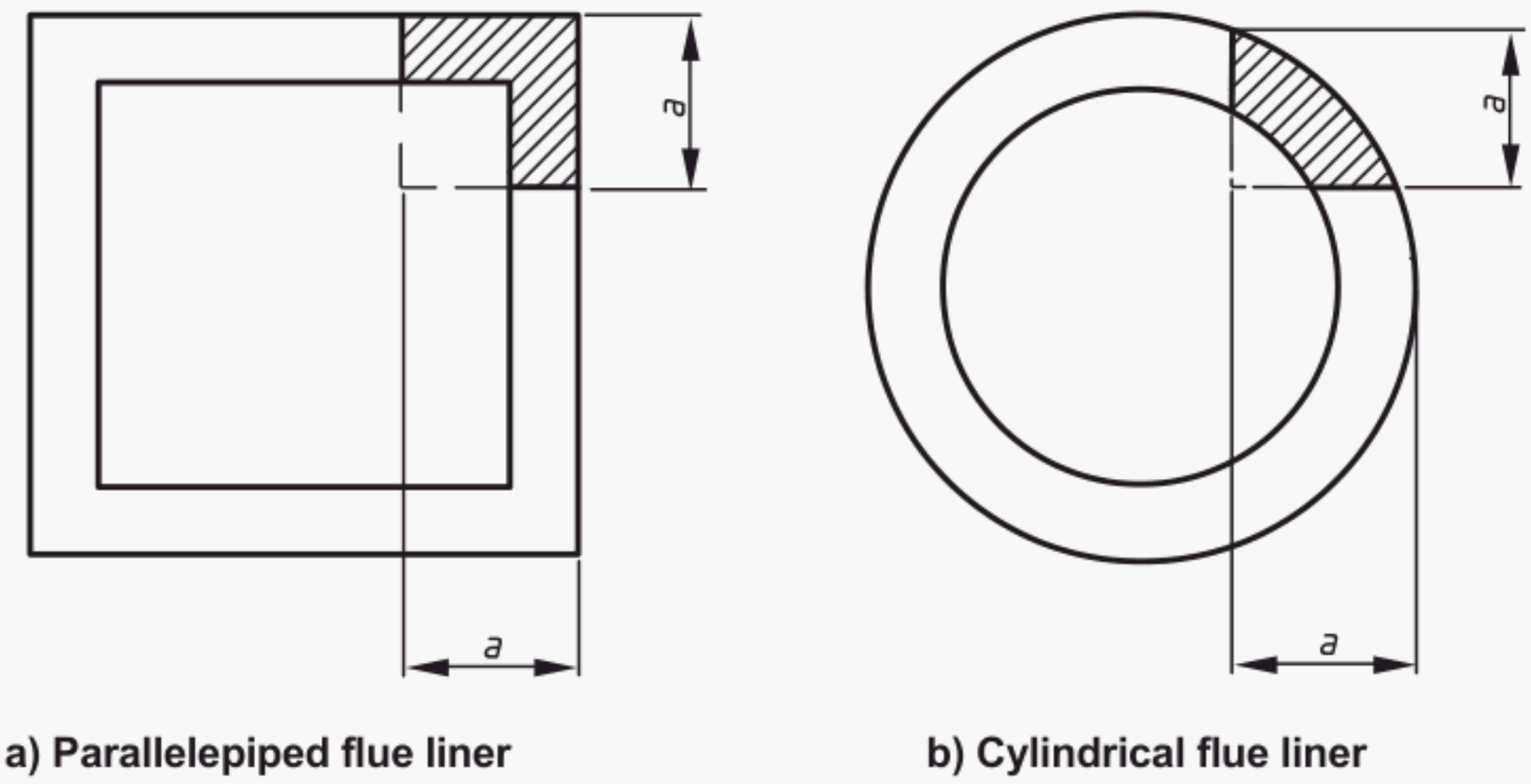

a) Parallelepiped flue liner **b) Cylindrical flue liner**

Key
a three times declared wall thickness

Figure A.7 — Compressive strength sample

A.9 Corrosion and condensate resistance test

A.9.1 Test apparatus

A.9.1.1 An upper tank containing an acid solution (see A.9.2) connected by means of a pipe and gate valve to a lower tank (see Figure A.8).

A.9.1.2 A lower tank containing:

— electrical heating elements immersed in test solution;

— thermometer to measure temperature of test solution, T;

— gauges to measure the level of test solution, L;

— mechanical stirrer to agitate the test solution, *S*;

— gauge to measure pH of the test solution, *pH*;

— collection collar.

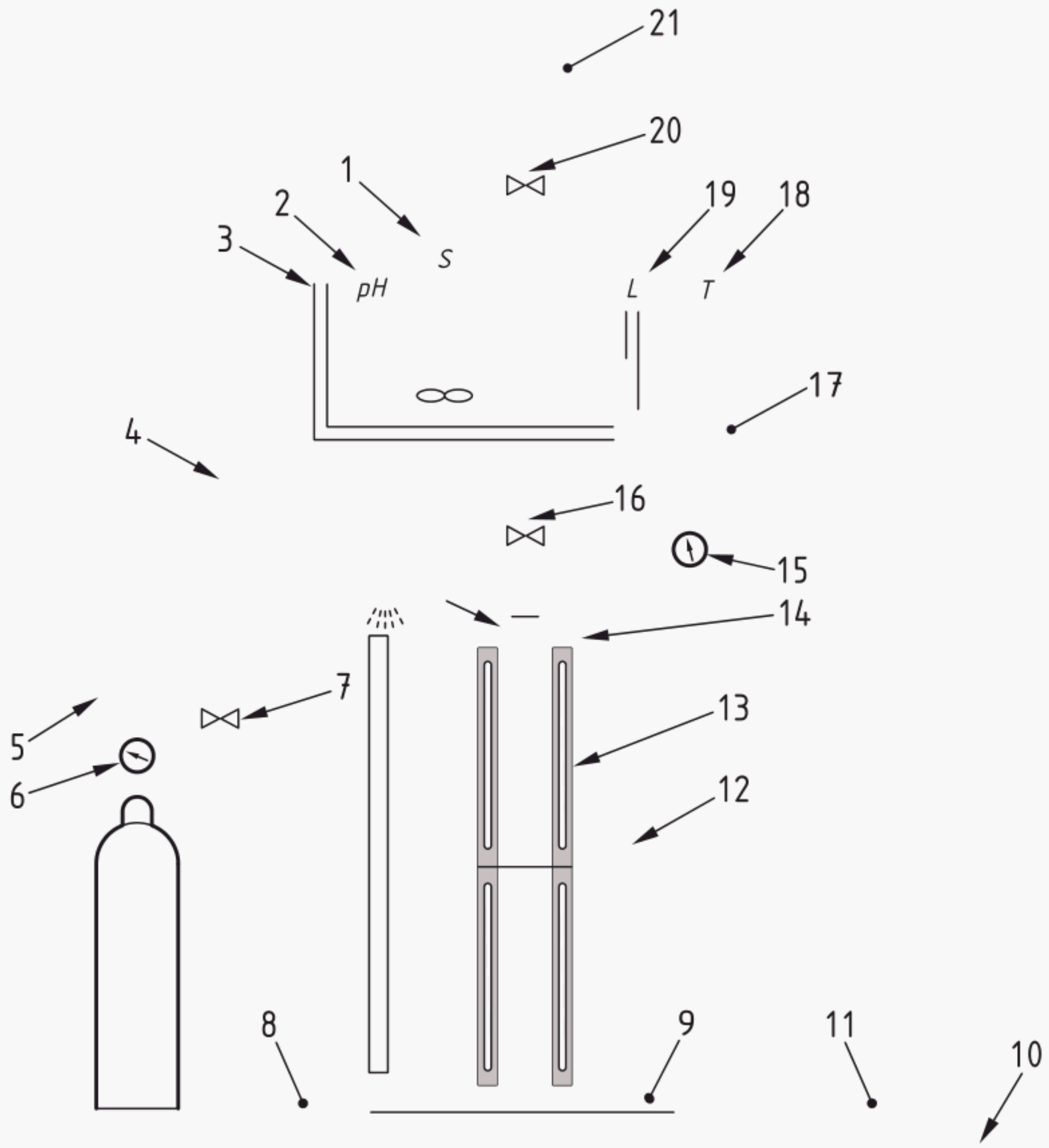

Key

1 mechanical stirrer
2 gauge for measuring pH value
3 electrical heating elements
4 pipe supplying de-ionized water
5 water supply pipe
6 pressure gauge
7 gate value
8 holding tank for collecting test solution
9 collection tray for used test solution
10 pipe for removal of used test solution
11 holding tank for used test solution
12 air-tight cylinder
13 flue liner test assembly
14 air-tight cap
15 air supply pipe with pressure gauge controlling air supply to spray nozzle
16 pipe with gate valve supplying test solution to spray nozzle
17 lower tank containing test solution
18 thermometer for measuring temperature of test solution
19 gauges for measuring level of test solution
20 pipe with gate valve controlling supply of acid solution to lower tank
21 upper tank containing acid solution

Figure A.8 — Corrosion test apparatus

A.9.1.3 A spray nozzle connected by means of a pipe and gate valve to the lower tank, with the nozzle passing through an air-tight cap closing off the top of the flue liners under test.

A.9.1.4 A pressurized air supply connected to the spray nozzle fitted with a pressure gauge to regulate the air pressure.

A.9.1.5 A controlled supply of pressurized de-ionized water feeding into the lower tank.

A.9.1.6 A collection tray, fitted with a grid, connected to a holding tank to allow safe removal of the used test solution.

A.9.1.7 An air-tight vessel providing an annulus of (75 ± 10) mm around the flue liners under test.

A.9.2 Test solution

The test solution for W1 conditions shall have a pH of 3,5 ± 0,2 with the following composition:

$(SO_4)^{2-}$ = 40 mg/l
$(NO_3)^{2-}$ = 26 mg/l
$(Cl)^{1-}$ = 5 mg/l

The test solution for W2 conditions shall have a pH of 2,3 ± 0,2 with the following composition:

$(SO_4)^{2-}$ = 250 mg/l
$(NO_3)^{2-}$ = 80 mg/l
$(Cl)^{1-}$ = 10 mg/l

A.9.3 Test assembly

Join two flue liners which have been subjected to the heat stress to their appropriate temperature group designation (for temperature designations greater than T200) having internal transverse dimensions of (140 ± 10) mm or the nearest size to the manufacturer's range, in accordance with the manufacturer's installation instructions.

A.9.4 Conditioning

Store the test assembly in a closed and ventilated room for seven days or dry in an oven at (70 ± 5) °C until constant weight is achieved.

A.9.5 Test procedure

After conditioning, record the weight of the test assembly (A.9.3) fit and seal the air-tight vessel around the flue liners and then position it on the collection tray (A.9.1.6) directly under the spray nozzle and cap (A.9.1.3) as shown in Figure A.8.

Pass the test solution (A.9.2) at the pressure of 3 bar (0,3 MPa) ± 10% at a temperature of (50 ± 5) °C through the spray nozzle (A.9.1.3) onto the inside face of the test section at a rate of (18 ± 2) l/h and maintain for (15 ± 2) min.

After spraying cycle dry the test assembly by blowing dry air at a pressure of 3 bar (0,3 MPa) ± 10 % and temperature of (20 ± 5) °C through the test assembly for (15 ± 2) min.

Every 24 $^{+2}_{0}$ h weigh any solution collected at the base of the vessel.

Repeat the spraying and drying cycle 240 times, then wash out the inside of the test section by spraying clean water for a period of (30 ± 2) min at a pressure of 3 bar (0,3 MPa) ± 10 %. Then condition the test section as described in A.9.4. Record the weight of the test assembly.

Maintain the temperature of the test room at (20 ± 5) °C throughout the test.

A.9.6 Test results

A.9.6.1 Compare the first recorded weight with the final weight after testing and record any change in weight.

A.9.6.2 Record the mass of any solution collected at the base of the vessel at each reading during the test and calculate the flow of solution expressed in $g \cdot h^{-1} m^{-2}$ of external surface of the flue liner.

A.10 Bulk density

A.10.1 Apparatus

A.10.1.1 **Callipers,** graduated in 0,5 mm, or flat metal rule, graduated in 0,5 mm and having a square at one end which can be fitted to the edge of the test piece.

A.10.1.2 **Drying oven,** capable of being controlled at (70 ± 3) °C.

A.10.1.3 **Balance,** capable or weighing the test piece to ± 0,1 g.

A.10.1.4 **Desiccator.**

A.10.2 Procedure

A.10.2.1 Cut three nominally rectangular test pieces each having a volume not less than 500 cm^3 from three separate liners. Cut the first test piece from the upper portion of one liner, the second test piece from the middle portion of the second liner and a third piece from the lower portion of a third liner.

The lower portion of the third liner is that towards the end opposite from the end from which the first test piece has been taken, to take account of any material variance that can occur during manufacture.

A.10.2.2 Using the callipers or flat metal rule, measure the three principle dimensions (length l, breadth b and thickness d) of each test piece to within 1 mm. Make these measurements at the centre line of each face (i.e. four times for each dimension) and note the average of the four measurements for each of the three dimensions.

A.10.2.3 Dry the last pieces in the drying oven controlled at (70 ± 3) °C until constant mass is achieved, then remove and leave to cool to ambient temperature in the desiccator. Weigh each piece to the nearest 1 g.

NOTE Constant mass is considered reached when two successive weightings taken (24 ± 1) h apart differ by a loss of mass less than 0,1 % of the initial mass.

A.10.3 Test result

A.10.3.1 Calculate and record the bulk volume and bulk density values for each test piece.

Calculate and express the results as described in A.10.3.2 and A.10.3.3.

A.10.3.2 Calculate the bulk volume, V_b of the test piece, in cubic centimetres, using the equation:

$$V_b = l \times b \times d \qquad \text{(A.4)}$$

where

l is the length, of the test piece in centimetres;

b is the breadth of the test piece in centimetres;

d is the thickness of the test piece in centimetres.

A.10.3.3 Calculate the bulk density Q_b of the test piece, in kilograms per cubic metre, using the equation:

$$Q_b = \frac{m}{V_b} \times 10^3 \qquad \text{(A.5)}$$

where

m is the dry mass, in grams;

V_b is the bulk volume, in cubic centimetres.

Express the result to three significant figures.

A.11 Ultimate compressive strength

A.11.1 Test procedure

Using the apparatus described in A.8.1 and a sample described in A.8.2, apply a load, without shock and increase at a rate of (0,3 ± 0,05) MPa/s until the sample is unable to support a further increase in load.

A.11.2 Result

Record the maximum load.

Annex B
(informative)

Illustration of joint types

Illustrations of joint types are given in Figure B.1.

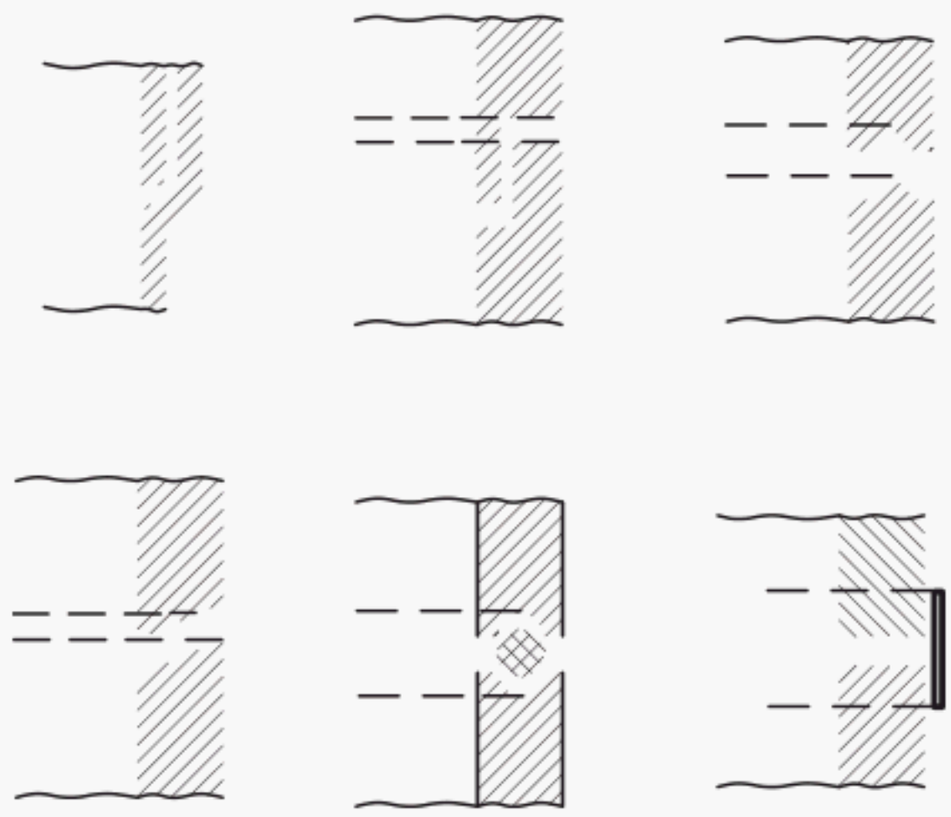

Figure B.1 — Joint types

Annex C
(normative)

Thermal resistance calculation

C.1 Thermal resistance of the individual element

The thermal resistance of the element is given by calculation either using analytical calculation (where possible) or using the finite elements method of EN 1859. For this calculation the temperature of the flue gas is taken equal to 200 °C and the value of α_1 equal 17 W/m·°C and α_2 equal 11 W/m·°C.

The calculation is given with a precision of 10 %.

NOTE The values of α have been determined as conventional values for a temperature of the flue gas of 200 °C with a flow of 5 m/s and a temperature of the outside face of up to 50 °C.

C.2 Thermal resistance of the flue liner

When needed, the effective coefficient of heat conductivity, λ_n of the closed air gap, in $W \cdot m^{-1} \cdot K^{-1}$ is calculated the equation taken from Table B.6 of EN 13384-1:2002+A2:2008 using:

$$\lambda_n = y \frac{D_{h,n}}{2\left(\frac{1}{\Lambda}\right)_n} \ln\left(\frac{D_{h,n} + 2d_n}{D_{h,n}}\right) \qquad \text{(C.1)}$$

where

y is the coefficient of form;

$D_{h,n}$ is the external hydraulic diameter of the inner wall bounding the air gap, in metres;

$\left(\frac{1}{\Lambda}\right)_n$ is the thermal resistance of the air gap as given in Table B.6 of EN 13384-1:2002+A2:2008;

d_n is the air gap width, in metres.

The thermal resistance of the chimney $\left(\frac{1}{\Lambda}\right)$, in $m^2 \cdot K \cdot W^{-1}$, is calculated from Equation (A.1) of EN 13384-1:2002+A2:2008, i.e.:

$$\left(\frac{1}{\Lambda}\right) = y \sum_n \frac{D_h}{2\lambda_n} \ln \frac{D_{h,n+1}}{D_{h,n}} \qquad \text{(C.2)}$$

where

y is the coefficient of form;

n is the number of layers including enclosed air gaps;

D_h is the internal hydraulic diameter, in metres;

λ_n is the coefficient of thermal conductivity of the material of the layer at the operating temperature, in watts per metre per Kelvin;

D_{hn} is the hydraulic diameter of the inside of each layer, in metres;

D_{hn+1} is the internal hydraulic diameter of the next layer or air gap, in metres.

The total coefficient of heat transfer, k_b, in $W \cdot m^{-2} \cdot K^{-1}$ for the chimney is calculated from Equation (21) of EN 13384-1:2002+A2:2008, i.e.:

$$k_b = \frac{1}{\frac{1}{\alpha_i} + \left(\frac{1}{\Lambda}\right) + \frac{D_h}{D_{ha} \times \alpha_a}} \qquad \text{(C.3)}$$

α_i is the internal coefficient of heat transfer, in watts per square metre per Kelvin;

$\left(\frac{1}{\Lambda}\right)$ is the thermal resistance of the chimney, in square metre Kelvins per watt;

α_a is the external coefficient of heat transfer, in watts per square metre per Kelvin;

D_h is the internal hydraulic diameter of the chimney, in metres;

D_{ha} is the external hydraulic diameter of the chimney, in metres.

NOTE From Annex C of EN 1858:2008, values of α_i =17 $W \cdot m^{-2} \cdot K^{-1}$ and α_a =11 $W \cdot m^{-2} \cdot K^{-1}$ are suggested.

Annex D
(normative)

Requirements of sampling plan in accordance with ISO 2859-1 at an Acceptable Quality Level (AQL) and inspection level S2 Inspection procedure

D.1 Acceptability determination

D.1.1 General

Single or double sampling may be used.

D.1.2 Single sampling

If the number of defectives found in the sample is equal to or less than the acceptance number, the batch shall be accepted. If the number of defectives is equal to or greater than the rejection number, the batch shall be rejected.

When reduced inspection is in effect and the acceptance number has been exceeded, but the rejection number has not been reached, the batch shall be accepted and normal inspection reinstated. If the rejection number has been reached or exceeded, the batch shall be rejected and normal inspection reinstated.

D.1.3 Double sampling

The number of sample units shall be equal to the first sample size in the plan. If the number of defectives found in the first sample is equal to or less than the first acceptance number, the batch shall be accepted. If the number of defectives found in the first sample is equal to or greater than the first rejection number, the batch shall be rejected. If the number of defectives found in the first sample is between the first acceptance and rejection numbers, the second sample of the size given in the plan shall be inspected.

The number of defectives found in the first and second samples shall be accumulated. If the cumulative number of defectives is equal to or less than the second acceptance number, the batch shall be accepted. If the cumulative number of defectives is equal to or greater than the second rejection number, the batch shall be rejected. If this occurs on reduced inspection, normal inspection shall be reinstated for the next batch.

When reduced inspection is in effect and, after the second sample, the acceptance number has been exceeded but the rejection number has not yet been reached, the batch shall be accepted and normal inspection reinstated.

D.2 Normal inspection

The sample size appropriate to the batch size and the acceptance and rejection values for numbers of defectives shall be in accordance with Tables D.1 to D.4. Sample units shall be selected at random.

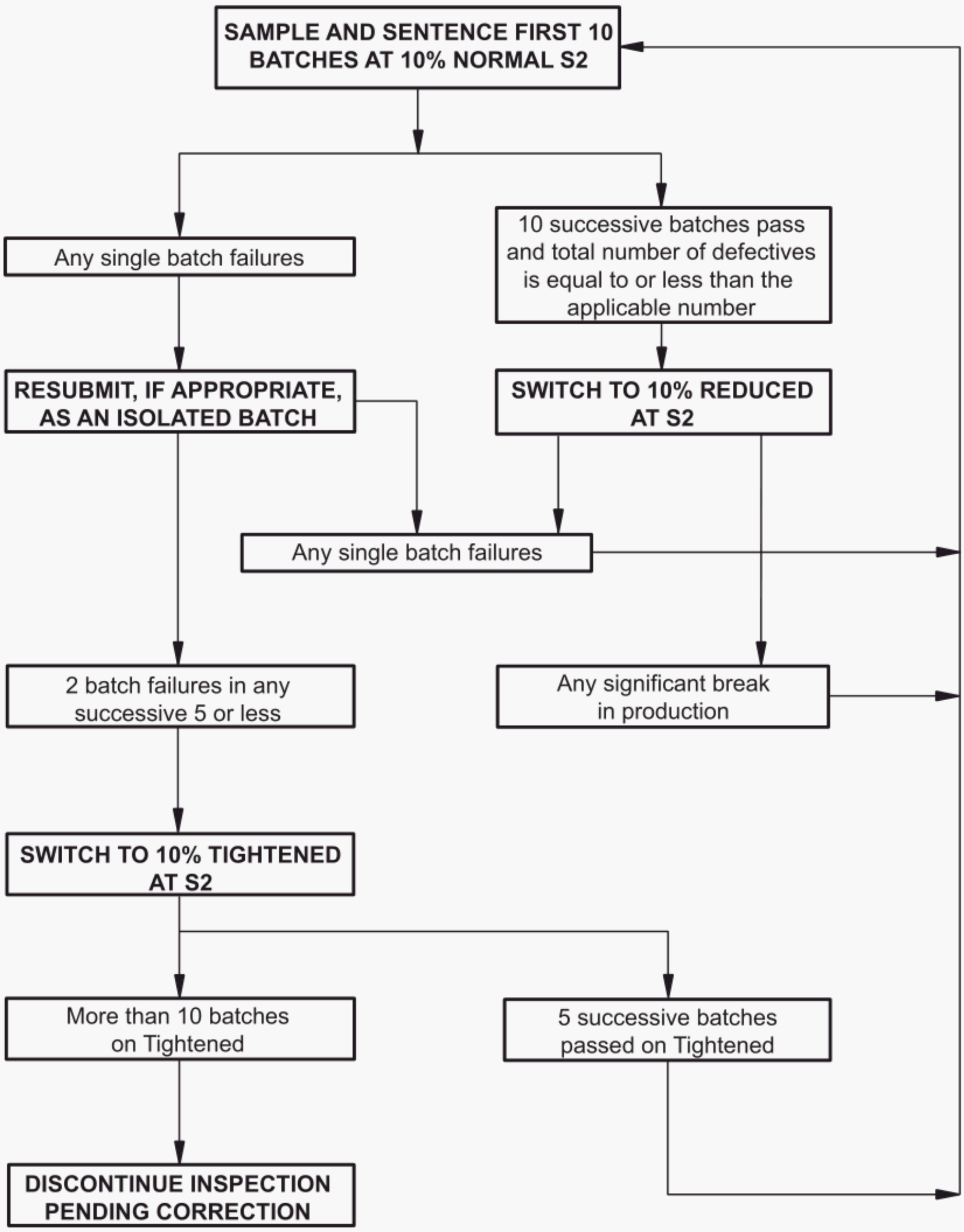

Figure D.1 — Summary of sampling procedures − Continuous batches

Table D.1 — Sampling plans for normal inspection

Batch size	Single sampling			Double sampling					
	Sample size	Accept number	Reject number	First sample size	Accept number	Reject number	Second sample number	Accept number	Reject number
2 to 1 200	5	1	2	3	0	2	3	1	2
1 201 to 20 000	8	2	3	5	0	3	5	3	4

D.3 Normal

A reduced inspection level as shown in Table D.2 shall be used when normal inspection is in effect, provided that the following conditions are satisfied:

a) the preceding ten batches have been on normal inspection, and none has been rejected on original inspection;

b) the total number of defectives in the samples from the ten preceding batches (or such other number required by Table D.3) is equal to or less than the limit number given in Table D.3.

When double sampling is in use, all samples inspected should be included, not first samples only.

Table D.2 — Sampling plans for reduced inspection

Batch size	Single sampling			Double sampling					
	Sample size	Accept number	Reject number	First sample size	Accept number	Reject number	Second sample number	Accept number	Reject number
2 to 1 200	2	0	2	not applicable					
1 201 to 20 000	3	1	3	2	0	3	2	0	4

Table D.3 — Limit number of defectives for normal to reduced inspection

Number of samples from last ten batches	Limit number of defectives
20 to 29	0
30 to 49	0
50 to 79	2
80 to 129	4

D.4 Reduced to normal inspection

When reduced inspection is in effect, normal inspection shall be reinstated if a batch is rejected, or if a batch is accepted without either acceptance or rejection criteria having been met (see D.1.1 and D.1.2).

D.5 Tightened inspection

Tightened inspection as shown in Table D.4 shall be used either when inspecting a new product or when two or more batches have been rejected in any five consecutive batches of normal inspection or for inspecting a batch which has previously been rejected after removal of units with previously undetected visible defects.

Table D.4 — Sampling plans for tightened inspection

Batch size	Single sampling			Double sampling					
	Sample size	Accept number	Reject number	First sample size	Accept number	Reject number	Second sample number	Accept number	Reject number
8 to 20 000	8	1	2	5	0	2	5	1	2

D.6 Tightened to normal inspection

Tightened inspection shall continue until five consecutive batches are accepted when normal inspection shall be resumed.

D.7 Discontinuation of inspection

If ten consecutive batches remain on tightened inspection, the provision of these sampling plans shall be discontinued pending action to improve the quality of the submitted batches.

Annex E
(informative)

Recommended test sequence

The recommended sequence of testing is:

a) gas tightness;

b) heat stress test at nominal working temperature;

c) gas tightness;

d) thermal shock;

e) gas tightness;

f) corrosion/condensate test;

g) gas tightness;

h) abrasion test;

i) gas tightness;

j) compressive strength.

Annex F
(informative)

Abbreviated designations for common types of concrete flue liners

Abbreviated designations for common types of concrete flue liners are given in Table F.1.

Table F.1 — Abbreviated designations for common types of concrete flue liners

Type	Temperature	Pressure	Sootfire resistance	Condensate resistance
A1	T600	N1	G	D
A2	T600	N2	G	D
B1	T450	N1	G	D
B2	T450	N2	G	D
B3	T450	N1	O	D
C1	T400	N1	G	D
C2	T400	N2	G	D
C3	T400	N1	O	D
D1	T300	N1	O	D
D2	T300	N1	O	W and D
D3	T300	P1	O	W and D
E1	T250	N1	O	D
E2	T250	N1	O	W and D
E3	T250	P1	O	W and D
F1	T200	N1	O	D
F2	T200	N1	O	W and D
G1	T160	N1	O	W and D
G2	T160	P1	O	W and D
H1	T140	N1	O	W and D
H2	T140	P1	O	W and D
J1	T120	N1	O	W and D
J2	T120	P1	O	W and D
K1	T100	N1	O	W and D
K2	T100	P1	O	W and D
L1	T80	N1	O	W and D
L2	T80	P1	O	W and D

NOTE A designated class of flue liner is suitable for use in a chimney with nominal working temperature up to a maximum of that designated. The designation for pressure, sootfire resistance, condensate resistance and corrosion resistance apply throughout the temperature range.

Annex ZA
(informative)

Clauses of this European Standard addressing the provisions of the EU Construction Products Directive

ZA.1 Scope and relevant characteristics

This European standard has been prepared under Mandate M/105 "Chimneys, flues and specific products" as amended by Mandate M/117 and M/134 given to CEN by the European Commission and the European Free Trade Association.

The clauses of this European Standard shown in this annex conform to the requirements of the Mandate given under the EU Construction Products Directive (89/106/EEC).

Compliance with these clauses confers a presumption of fitness of the flue liners and fittings covered by this European Standard for their intended uses indicated herein; reference shall be made to the information accompanying the CE marking.

WARNING — Other requirements and other EU Directives, not affecting the fitness for intended use may be applicable to a construction product falling within the scope of this standard.

NOTE 1 In addition to any specific clauses relating to dangerous substances contained in this standard, there may be other requirements applicable to the products falling within its scope (e.g. transposed European legislation and national laws, regulations and administrative provisions). In order to meet the provisions of the EU Construction Products Directive, these requirements need also to be complied with, when and where they apply.

NOTE 2 An informative database of European and national provisions on dangerous substances is available at the Construction web site on EUROPA (http://ec.europa.eu/enterprise/construction/internal/dangsub/dangmain_en.htm).

This annex establishes the conditions for the CE marking of the flue liners and fittings intended for the uses indicated in Table ZA.1 and shows the relevant clauses applicable.

This annex has the same scope as Clause 1 of this standard and is defined by Table ZA.1

Table ZA.1 — Relevant clauses

Construction product: precast concrete flue liners and fittings Intended uses: Multi-wall Chimneys			
Performance characteristic	**Requirement clauses in this standard**	**Levels and/or classes**	**Notes**
Gas tightness/leakage	8.3 Gas tightness	None	Declared pressure class
Flow resistance	8.11.1 Flow resistance of flue liners	None	Declared mean roughness (in metres) and whether tested or default value used
	8.11.2 Flow resistance fittings	None	Declared coefficient of flow resistance and whether tested or default value used
Thermal resistance	8.9 Thermal resistance	None	Declared value of thermal resistance

Table ZA.1 *(continued)*

Performance characteristic	Requirement clauses in this standard	Levels and/or classes	Notes
Resistance to fire	8.1 Heat stress resistance 9.1.4 resistance to fire classes	O	Non sootfire resistant products are classified O
	8.2 Heat shock resistance 9.1.4 resistance to fire classes	G	Sootfire resistant products are classified G
Reaction to fire	4 .2 Reaction to fire	A1	Declared class A1
Compressive strength	8.5 Compressive strength	None	Declared structural height
Durability: chemicals	8.7 Condensate resistance	None	Declared condensate resistance class (subject to a threshold value for class W products)
Durability: corrosion	8.6 Corrosion resistance	None	Declared corrosion resistance class (subject to a threshold value for class W products)
Durability: Abrasion	8.4 Abrasion resistance	None	Pass/fail subject to a threshold value
Dangerous substances	8.12 Dangerous substances	None	As indicated in ZA.1 and ZA.3
Durability: freeze/thaw	8.10 Freeze/thaw resistance	None	Pass/fail criteria

The requirement on a certain characteristic is not applicable in those Member States (MSs) where there are no regulatory requirements on that characteristic for the intended use of the product. In this case, manufacturers placing their products on the market of these MSs are not obliged to determine nor declare the performance of their products with regard to this characteristic and the option "No performance determined" (NPD) in the information accompanying the CE marking (see ZA.3) may be used. The NPD option may not be used, however, where the characteristic is subject to a threshold level.

ZA.2 Procedure of attestation of conformity of concrete flue liners

ZA.2.1 System of attestation of conformity

The system of attestation of conformity for concrete flue liners for chimneys indicated in Table ZA.1, in accordance with the Decision of the Commission 95/467/EC, as amended by 01/596/EC & 2002/592/EC and as given in Annex III of the mandate M/105, as amended, is shown in Table ZA.2 for the indicated intended use.

Table ZA.2 — System of attestation of conformity

Product	Intended use	Level or class	Attestation of conformity system
Flue liners (elements and blocks)	**Chimneys**	**Any**	**2+** [a]

[a] System 2+: See Directive 89/106/EEC (CPD) Annex III.2.(ii), First possibility, including certification of the factory production control by an approved body on the basis of initial inspection of factory and of factory production control as well as of continuous surveillance, assessment and approval of factory production control.

The attestation of conformity of the products in Table ZA.1 shall be according to the evaluation of conformity procedures indicated in Table ZA.3 resulting from application of the clauses of this or other European Standard indicated therein.

Table ZA.3— Assignment of evaluation of conformity tasks for concrete flue liners under system 2+

Tasks			Content of the task	Evaluation of conformity clauses to apply
Tasks for the manufacturer	Factory production control (F.P.C)		Parameters related to all characteristics of Table ZA.1	12.4 and Annex D
	Initial type testing		All characteristics of Table ZA.1 except reaction to fire	12.2
	Initial type testing by a notified test laboratory		Reaction to fire	12.2
	Further testing of samples		All relevant characteristics of Table ZA.1	12.3
Tasks for the notified body	Certification of F.P.C. on the basis of	Initial inspection of factory and of F.P.C	Parameters related to all relevant characteristics of Table ZA.1, in particular: — Reaction to fire — Resistance to wind load — Compressive strength	12.4
		Continuous surveillance, assessment and approval of F.P.C.	Parameters related to all relevant characteristics of Table ZA.1	12.3, 12.4 and Annex D

ZA.2.2 EC Certificate and Declaration of conformity

When compliance with the conditions of this annex is achieved, and once the notified body has drawn up the certificate mentioned below, the manufacturer or manufacturer's agent established in the EEA shall prepare and retain a declaration of conformity, which entitles the manufacturer to affix the CE marking. This declaration shall include:

— name and address of the manufacturer, or his authorized representative established in the EEA, and the place of production;

NOTE 1 The manufacturer may also be the person responsible for placing the product onto the EEA market, if he takes responsibility for CE marking.

— description of the product (type, identification, use, etc.), and a copy of the information accompanying the CE marking;

NOTE 2 Where some of the information required for the Declaration is already given in the CE marking information, it does not need to be repeated.

— provisions to which the product conforms (e.g. Annex ZA of this European Standard);

— particular conditions applicable to the use of the product (e.g. provisions for use under certain conditions, etc.);

— the number of the accompanying factory production control certificate;

— name of, and position held by, the person empowered to sign the declaration on behalf of the manufacturer or authorized representative.

The declaration shall be accompanied by a factory production control certificate, drawn up by the notified body, which shall contain, in addition to the information above, the following:

— name and address of the notified body;

— the number of the factory production control certificate;

— conditions and period of validity of the certificate, where applicable;

— name of, and position held by, the person empowered to sign the certificate.

The above mentioned declaration shall be presented in the official language or languages of the Member State in which the product is to be used.

ZA.3 CE Marking and labelling

The manufacturer or manufacturer's authorized representative established within the EU or EFTA is responsible for the affixing of the CE marking.

The CE conformity symbol to affix shall be in accordance with Directive 93/68/EEC together with the identification number of the notified body, as well as the name or identifying mark of the producer and the product designation, and shall be shown on at least 20 % of the flue liners or fittings in each consignment.

In addition, the CE marking shall appear on the packaging and/or on the accompanying commercial documents, together with the following information:

a) identification number of the certification body;

b) name or identifying mark of the manufacturer;

c) the last two digits of the year in which the marking is affixed;

d) registered address of the producer;

e) number of the certificate of the factory production control;

f) reference to this European Standard with the version date;

g) description of the product: Product type (e.g. A1);

h) information on the relevant essential characteristics in Table ZA.1, expressed as:

   1) values presented as standard designation(s), see Clause 9;

   2) values and, where relevant, level to declare for each essential characteristic not included in the designation as indicated in "Notes" in Table ZA.1;

   3) the "No performance determined" (NPD) option where relevant.

The "No performance determined" (NPD) option shall not be used where the performance characteristic is subject to a threshold value. Otherwise, the NPD option may be used when and where the performance characteristic, for a given intended use, is not subject to regulatory requirements.

Figures ZA.1 and ZA.2 give examples of the information to be given on the product, packaging and/or accompanying documents.

CE	CE conformity marking consisting of the "CE" symbol given in Directive 93/68/EEC
0123-CPD-0001	FPC certificate number
10	Last two digits of year of affixing of CE marking
AnyCo Ltd, P.O. Box 21, B – 1050	Name or identifying mark and registered address of the producer
EN 1857-T400 N1 D 2 G	and appropriate designation in accordance with Clause 9

Figure ZA.1 — Example CE marking on the product

Other information required by this clause and not given with Figure ZA.1 shall be given in the accompanying documents.

CE	CE conformity marking consisting of the "CE" symbol given in Directive 93/68/EEC
01234 10	Identification number of the notified body Last two digits of year of affixing of CE marking
AnyCo Ltd, P.O. Box 21, B – 1050 01234-CPD-00234	Name or identifying mark and registered address of the producer Number of FPC certificate
EN 1857:2010	Number of European Standard with the version date
Concrete flue liner T400 N1 D 2 G	Definition of the product and appropriate designation in accordance with Clause 9
Flow resistance: Mean roughness 0,0015 m Thermal resistance 0,1 $m^2 \cdot K/W$ Compressive strength: (declared structural height) 30 m Freeze/thaw resistance: N.P.D Reaction to fire: A1 Release of dangerous Substances: None	Information on mandated characteristics (those not included in the designation) or threshold values to be given (see Table ZA.1)

Figure ZA.2 — Example CE of marking information in the accompanying documents

In addition to any specific information relating to dangerous substances shown above, the products should also be accompanied, when and where required and in the appropriate form, by documentation listing any other legislation on dangerous substances for which compliance is claimed, together with any information required by that legislation.

NOTE 1 European legislation without national derogations need not to be mentioned.

NOTE 2 Affixing the CE marking symbol means, if a product is subject to more than one directive, that it conforms to all applicable directives.

Bibliography

[1] EN 206-1:2000, *Concrete — Part 1: Specification, performance, production and conformity*

[2] EN 45012, *General requirements for bodies operating assessment and certification/registration of quality systems (ISO/IEC Guide 62:1996)*

[3] EN ISO 9001:2008, *Quality management systems — Requirements (ISO 9001:2008)*

[4] Council Directive 89/106/EEC "Council Directive 89/106/EEC of 21 December 1988 on the approximation of laws, regulations and administrative provisions of the Member States relating to construction products"

[5] Guidance Paper E "Levels and classes in the Construction Products Directive"

[6] 96/603/EC: Commission Decision of 4 October 1996 establishing the list of products belonging to Classes A "No contribution to fire" provided for in Decision 94/611/EC implementing Article 20 of Council Directive 89/106/EEC on construction products (Text with EEA relevance)

[7] EN 1858:2008, *Chimneys — Components — Concrete flue blocks*

BSI - British Standards Institution

BSI is the independent national body responsible for preparing British Standards. It presents the UK view on standards in Europe and at the international level. It is incorporated by Royal Charter.

Revisions

British Standards are updated by amendment or revision. Users of British Standards should make sure that they possess the latest amendments or editions.

It is the constant aim of BSI to improve the quality of our products and services. We would be grateful if anyone finding an inaccuracy or ambiguity while using this British Standard would inform the Secretary of the technical committee responsible, the identity of which can be found on the inside front cover. Tel: +44 (0)20 8996 9000. Fax: +44 (0)20 8996 7400.

BSI offers members an individual updating service called PLUS which ensures that subscribers automatically receive the latest editions of standards.

Buying standards

Orders for all BSI, international and foreign standards publications should be addressed to Customer Services. Tel: +44 (0)20 8996 9001. Fax: +44 (0)20 8996 7001 Email: orders@bsigroup.com You may also buy directly using a debit/credit card from the BSI Shop on the Website http://www.bsigroup.com/shop

In response to orders for international standards, it is BSI policy to supply the BSI implementation of those that have been published as British Standards, unless otherwise requested.

Information on standards

BSI provides a wide range of information on national, European and international standards through its Library and its Technical Help to Exporters Service. Various BSI electronic information services are also available which give details on all its products and services. Contact Information Centre. Tel: +44 (0)20 8996 7111 Fax: +44 (0)20 8996 7048 Email: info@bsigroup.com

Subscribing members of BSI are kept up to date with standards developments and receive substantial discounts on the purchase price of standards. For details of these and other benefits contact Membership Administration. Tel: +44 (0)20 8996 7002 Fax: +44 (0)20 8996 7001 Email: membership@bsigroup.com

Information regarding online access to British Standards via British Standards Online can be found at http://www.bsigroup.com/BSOL

Further information about BSI is available on the BSI website at http://www.bsigroup.com.

Copyright

Copyright subsists in all BSI publications. BSI also holds the copyright, in the UK, of the publications of the international standardization bodies. Except as permitted under the Copyright, Designs and Patents Act 1988 no extract may be reproduced, stored in a retrieval system or transmitted in any form or by any means – electronic, photocopying, recording or otherwise – without prior written permission from BSI.

This does not preclude the free use, in the course of implementing the standard, of necessary details such as symbols, and size, type or grade designations. If these details are to be used for any other purpose than implementation then the prior written permission of BSI must be obtained.

Details and advice can be obtained from the Copyright and Licensing Manager. Tel: +44 (0)20 8996 7070 Email: copyright@bsigroup.com

BSI Group
Headquarters 389
Chiswick High Road,
London, W4 4AL, UK
Tel +44 (0)20 8996 9001
Fax +44 (0)20 8996 7001
www.bsigroup.com/
standards