BS EN 50340:2010

BSI Standards Publication

Hydraulic cable cutting devices — Devices to be used on electrical installations with nominal voltage up to AC 30 kV

bsi.

...making excellence a habit.™

National foreword

This British Standard is the UK implementation of EN 50340:2010. It supersedes BS EN 50340:2001, which will be withdrawn on 01 April 2013.

The UK participation in its preparation was entrusted to Technical Committee PEL/78, Tools for live working.

A list of organizations represented on this committee can be obtained on request to its secretary.

This publication does not purport to include all the necessary provisions of a contract. Users are responsible for its correct application.

© BSI 2011

ISBN 978 0 580 62577 0

ICS 13.260; 29.240.20; 29.260.99

Compliance with a British Standard cannot confer immunity from legal obligations.

This British Standard was published under the authority of the Standards Policy and Strategy Committee on 28 February 2011.

Amendments issued since publication

Date	Text affected

EUROPEAN STANDARD

NORME EUROPÉENNE

EUROPÄISCHE NORM

EN 50340

May 2010

ICS 13.260; 29.240.20; 29.260.99

Supersedes EN 50340:2001 + corr. Feb.2002

English version

Hydraulic cable cutting devices - Devices to be used on electrical installations with nominal voltage up to AC 30 kV

Dispositifs coupe câbles hydrauliques - Dispositifs à utiliser sur des installations électriques de tension nominale jusqu'à 30 kV en courant alternatif

Hydraulische Kabelschneidgeräte - Geräte zur Verwendung an elektrischen Anlagen mit Nennwechselspannungen bis 30 kV

This European Standard was approved by CENELEC on 2010-04-01. CENELEC members are bound to comply with the CEN/CENELEC Internal Regulations which stipulate the conditions for giving this European Standard the status of a national standard without any alteration.

Up-to-date lists and bibliographical references concerning such national standards may be obtained on application to the Central Secretariat or to any CENELEC member.

This European Standard exists in three official versions (English, French, German). A version in any other language made by translation under the responsibility of a CENELEC member into its own language and notified to the Central Secretariat has the same status as the official versions.

CENELEC members are the national electrotechnical committees of Austria, Belgium, Bulgaria, Croatia, Cyprus, the Czech Republic, Denmark, Estonia, Finland, France, Germany, Greece, Hungary, Iceland, Ireland, Italy, Latvia, Lithuania, Luxembourg, Malta, the Netherlands, Norway, Poland, Portugal, Romania, Slovakia, Slovenia, Spain, Sweden, Switzerland and the United Kingdom.

CENELEC

European Committee for Electrotechnical Standardization
Comité Européen de Normalisation Electrotechnique
Europäisches Komitee für Elektrotechnische Normung

Management Centre: Avenue Marnix 17, B - 1000 Brussels

© 2010 CENELEC - All rights of exploitation in any form and by any means reserved worldwide for CENELEC members.

Ref. No. EN 50340:2010 E

Foreword

This European Standard EN 50340 was prepared by the Technical Committee CENELEC TC 78, Equipment and tools for live working. It was submitted to the formal vote as an amendment and was approved by CENELEC as a new edition of EN 50340 on 2010-04-01.

This EN 50340:2010 supersedes EN 50340:2001.

The principal changes compared to EN 50340:2001 are as follows (minor changes are not listed):

- In the scope were defined limits for the pressure inside the cable cutting devices, to ensure that the products are outside the Pressure Equipment Directive.
- The definitions were corrected and defined more clearly.
- According to the operating method and the local regulation, two possible insulating hose assemblies can be applicable:
  - Method A: The insulating hose assembly has a length of 10 m. Detailed references to EN 62237 with some amendments have been added for checking the insulation hose line. In Annex A is recommended a distance of minimum 10 m as safety zone.
  - Method B: The insulating hose assembly consists of 3 m non insulating hose plus 320 mm hose according to EN 62237 which gives a sufficient insulation for the worker.
- A note was inserted in 5.6 and 5.12 to consider the kind of working of the safety valve.
- The parameters of the metal wire were inserted in 5.7.
- Subclause 5.10 was renamed into “Stability” and the conditions of the test were amended.

Attention is drawn to the possibility that some of the elements of this document may be the subject of patent rights. CEN and CENELEC shall not be held responsible for identifying any or all such patent rights.

The following dates were fixed:

– latest date by which the amendment has to be implemented at national level by publication of an identical national standard or by endorsement	(dop)	2011-04-01
– latest date by which the national standards conflicting with the amendment have to be withdrawn	(dow)	2013-04-01

The cable cutting devices specified here are designed to protect the user while he is verifying whether the cable is dead.

In some countries, it is necessary where the cable to be cut is live that the first action of the cutting device is to make, on a multi-phases cable, only a single-phase fault to earth so that the protective devices of the network can operate on a single-phase fault.

This European Standard specifies requirements and tests for these cable cutting devices.

Contents

1 Scope **5**
2 Normative references **5**
3 Definitions **6**
4 Requirements **7**
4.1 General 7
4.2 Cutting head 7
4.3 Insulating hose assembly 8
4.4 Insulating hydraulic fluid 9
4.5 Pump 9
4.6 Safety valve 9
4.7 Reverse flow valve 9
4.8 Pressure gauge 9
4.9 Hydraulic coupler 9
4.10 Bonding and earthing system 9
4.11 Marking 10
4.12 Instructions for use 11
5 Tests **11**
5.1 General 11
5.2 Inspection, instructions for use and marking 11
5.3 Test of the insulating hose assembly 11
5.4 Dielectric strength of the hydraulic fluid 12
5.5 Hardness of the blade(s) 12
5.6 Test under stress 12
5.7 Self-acting opening test 13
5.8 Accuracy of cutting 13
5.9 Working force of the pump 14
5.10 Stability 14
5.11 Operation of the safety valve 14
5.12 Pressure strength of the cable cutting device 15
5.13 Functional test 15
5.14 Test on earthing system 15
6 Conformity assessment of cable cutting devices having completed the production phase **16**
Annex A (normative) **Instructions for use** **23**
A.1 Explanation of marking 23
A.2 Description of cable cutting device 23
A.3 Information about use according to the rules and procedures 23
A.4 Guidance in case of faults of the cable cutting device 24
A.5 Guidance after short circuiting 24
Annex B (normative) **List of type tests** **25**
Annex C (normative) **Classification of defects and tests to be allocated** **26**
Annex D (informative) **Background** **27**

Figures

Figure 1 – Example of cable cutting device 17
Figure 2 – “Double triangle” symbol 18
Figure 3 – Self-acting opening test – Tackle-points to strain the blade(s) 19
Figure 4 – Pump force – Test arrangement 20
Figure 5 – Stability – Test arrangement 21
Figure 6 – Earthing system – Test arrangement 22

Tables

Table 1 – Forces to be applied to the blade(s) to oppose the opening action 13
Table B.1 – List of type tests 25
Table C.1 – Classification of defects and associated requirements and tests 26

1 Scope

This European Standard is applicable to cable cutting devices to be used to verify that a cable is dead in accordance with the rules given in EN 50110-1.

The following limits apply to the cable cutting devices:

- pressure less than 1 000 bar or pressure (bar) x volume (l) less than 10 000;
- fluid outside the categories listed in Article 9 Group 1 (explosive, extremely flammable, highly flammable, flammable (where the maximum allowable temperature is above flashpoint), very toxic, toxic, oxidizing) of the Pressure Equipment Directive.

Cable cutting devices specified in this standard are for use on systems with nominal voltage up to 30 kV AC and nominal frequencies up to 60 Hz and shall only be suitable for operation by foot or by hand. This European Standard does not deal with motorised cable cutting devices.

For devices to be used on systems with nominal voltages above 30 kV AC this standard should be used as a guide but additional requirements and tests shall be agreed between manufacturer and customer to provide for an equivalent level of safety.

These devices are not designed to be used on cables with special armour, or with steel wires or steel tapes more than 1 mm in diameter or thickness.

2 Normative references

The following referenced documents are indispensable for the application of this document. For dated references, only the edition cited applies. For undated references, the latest edition of the referenced document (including any amendments) applies.

EN 10016-2:1994, *Non-alloy steel rod for drawing and/or cold rolling – Part 2: Specific requirements for general purposes rod*

EN 12164:1998 + A1:2000, *Copper and copper alloys – Rod for free machining purposes*

EN 50110-1:2004, *Operation of electrical installations*

EN 60156:1995, *Insulating liquids – Determination of the breakdown voltage at power frequency – Test method* (IEC 60156:1995)

EN 61111:2009, *Live working – Electrical insulating matting* (IEC 61111:2009)

EN 61230:1995 [1)], *Live working – Portable equipment for earthing or earthing and short-circuiting* (IEC 61230:1993, mod.)

EN 61318:2008, *Live working – Conformity assessment applicable to tools, devices and equipment* (IEC 61318:2007)

EN 62237:2005, *Live working – Insulating hoses with fittings for use with hydraulic tools and equipment* (IEC 62237:2003, mod.)

[1)] Superseded by EN 61230:2008, *Live working – Portable equipment for earthing or earthing and short-circuiting* (IEC 61230:2008).

HD 437 S1:1984, *Standard conditions for use prior to and during the testing of solid electrical insulating materials* (IEC 60212:1971)

EN ISO 6507-1:2005, *Metallic materials – Vickers hardness test – Part 1: Test method* (ISO 6507-1:2005)

3 Definitions

For the purposes of this document, the following terms and definitions apply.

3.1
cable cutting device
a portable device which is used to cut cables in a safe manner. This device is used to verify that a cable is dead at the work site.

It consists of the following components (see Figure 1):

- a cutting head, this contains the cutting blade(s);
- a hydraulic pump;
- a length of insulating hose with fittings (insulating hose assembly) to connect the cutting head and the pump;
- insulating hydraulic fluid;
- an earthing system

3.2
cutting head
that part (component) of the device which contains the cutting blade(s) and which is applied to the cable to be cut. The blade(s) is(are) operated by means of hydraulic pressure

3.3
pump
that part of the device which generates pressure in the insulating hydraulic fluid within the hose to operate the cutting head

3.4
insulating hose
an insulating and pressure resistant hose used as part of an insulating hose assembly

3.5
insulating hose assembly
an insulating and pressure resistant component consisting of an insulating hose with fittings at each end for the connection of parts of hydraulic equipment at different electric potentials

3.6
insulating hydraulic fluid
fluid with suitable electrical insulating properties used to equalize the pressure between the pump and the cutting head

3.7
reverse flow valve
a valve for manual operation which is designed and installed for the backflow of fluid from the pressure compartment to the storage compartment after having cut through the cable completely

3.8
safety valve
a valve designed and installed to release the pressure of fluid in the pressure compartment when the maximum operating pressure of the hydraulic system is reached, so that it protects the system against overpressure

3.9
hydraulic coupler
a pair of fittings to permit a connection of hydraulic components

NOTE Some couplers can be separated by hand, others may require the use of a tool.

3.10
maximum operating pressure
the operating pressure specified by the manufacturer which shall not be exceeded during the functioning of the cable cutting device

3.11
blade(s)
metallic part(s) with a sharp edge or edges which is designed to penetrate the cable in such a way that the cable will be cut into two separate parts

3.12
earthing system
all those necessary connections, conductors and fittings used to ensure that the electrical potential of an equipment is as close as practicable to the earth potential (i.e. at or about 0 V to earth)

[IEV 604-04-02, mod.]

3.13
type test
a test performed of one or more devices made to a certain design to show that the design meets certain specifications

[IEV 151-04-15]

4 Requirements

4.1 General

4.1.1 The device shall operate correctly and safely indoor, outdoor, under rain and with a range of ambient temperature between -20 °C to +40 °C.

4.1.2 The complete cable cutting device shall safely withstand the maximum operating pressure.

4.1.3 For cable cutting devices which can be dismantled, suitable means for the storage and transportation of the separate components shall be provided. These means shall be designed to prevent damage to the component parts in transit and pollution/contamination of all the insulating parts(i.e. hydraulic fluid, insulating hose assemblies).

4.2 Cutting head

4.2.1 The design of the cutting head shall be such that it can be transported in a safe manner and is safe and easy to locate on a cable.

4.2.2 The mass of the cutting head shall not exceed 20 kg so that it can be safely and readily operated by one person.

4.2.3 The cutting head shall be designed so that when properly applied, it shall not be displaced during a cutting operation except when a short circuit fault occurs.

4.2.4 The cutting head shall be capable of accepting all cables up to the maximum diameter indicated by the manufacturer.

4.2.5 The blade(s) of the cutting head shall be made of a durable metallic material with a surface hardness ranging between 558 HV5 and 715 HV5 (50 HRC up to 60 HRC) (see EN ISO 6507-1).

4.2.6 The cutting head shall be designed to ensure that cutting is done continuously until the cable is cut through completely.

4.2.7 If the hydraulic pressure disappears for any reason the blade(s) shall return to the starting position.

4.2.8 The cutting head shall be connected to the insulating hose assembly by a coupler which requires the use of a tool to separate it.

4.2.9 The cutting head(s) shall be compatible with the pump as specified by the manufacturer of the pump.

4.3 Insulating hose assembly

According to the operating method and the local regulation, two possibilities can be applicable:

4.3.1 Method A

The insulating hose assembly shall fulfil the following requirements of EN 62237:2005:

- 5.3.1.2 “Electric tests on insulating hoses before exposure to humidity” with a test voltage of 36 kV;
- 5.3.1.3 “Electric tests on insulating hoses after exposure to humidity” with a test voltage of 36 kV;
- 5.3.1.4 “Electric tests on insulating after the infliction of a cut on hoses” with a test voltage of 36 kV;
- 5.4.1 “Hydrostatic test”;
- 5.4.2 “Fatigue test”;
- 5.4.3 “Mechanical impulse test” with a test piece according to group II (min. 600 mm) instead test piece according to group I;
- 5.4.4 “Leakage test”;
- 5.4.5 “Change in length test”;
- 5.4.6 “Burst test” with a test piece according to group II (min. 600 mm) instead test piece according to group I;
- 5.4.7 “Cold bend test“.

The following additions must be considered:

4.3.1.1 The part of the insulating hose of the hose assembly hoses shall provide the required electric insulation between the operator and the cable even when the cutting head blade(s) reach(es) the highest nominal voltage at power frequency and also under condition of pollution of the outer surface.

4.3.1.2 The complete length of the insulating hose of the hose assembly shall be made of insulating material. It shall be flexible.

4.3.1.3 The insulating hose assembly shall be a single piece and be not less than 10 m long. Moreover, the effective length shall be in accordance with the recommendations for use as mentioned in Annex A.

4.3.2 Method B

The insulating hose of the hose assembly shall fulfil all the requirements of EN 62237.

The length of the insulating hose shall be a minimum of 320 mm, according to the maximum voltage of 36 kV of the installation. This insulating hose assembly shall be extended by a non insulating hose of a length required by the operating method with a minimum of 3 m. Moreover, the effective length shall be in accordance with the recommendations for use as mentioned in Annex A.

The insulating hose of the insulating hose assembly shall be connected nearby the cutting head.

4.4 Insulating hydraulic fluid

The insulating hydraulic fluid shall withstand a test voltage of at least 10 kV.

4.5 Pump

4.5.1 The pump shall be fitted with a safety valve, a reverse flow valve and a pressure gauge to indicate the operating pressure.

4.5.2 To ensure that the pump does not move or tip during pumping, the part of the pump in contact with the ground shall be designed to provide sufficient stability during operation.

4.5.3 The pump shall be suitable for operation by foot or by hand.

4.5.4 Any means provided to adjust the maximum operating pressure shall only be accessible via a cover/plate, or enclosure which needs a special tool for removal.

4.5.5 The pressure level at which the safety valve shall function shall be reached with no more than 100 strokes of the pump operating mechanism.

4.6 Safety valve

4.6.1 The safety valve shall release pressure in excess of the operating pressure by diverting the flow of the insulating fluid back into the storage compartment.

4.6.2 The safety valve shall close automatically when the pressure in the system decreases below the maximum operating pressure.

4.7 Reverse flow valve

The reverse flow valve shall be readily operated from the operating position.

4.8 Pressure gauge

4.8.1 The pressure indicated by the pressure gauge shall be clear and unambiguous when viewed from the operating position.

4.8.2 The pressure gauge shall either be protected against mechanical damage or be sufficiently robust in construction.

4.8.3 The range of pressure shown by the pressure gauge shall extend from « No pressure » to a value not less than 1,2 times the maximum operating pressure. The « maximum operating pressure » shall be clearly indicated by a marking in red. The indication shall be clear and unambiguous when viewed from the operating position.

4.9 Hydraulic coupler

4.9.1 The mating parts of the coupler shall be capable of being easily connected by hand on the pump and by a tool on the head.

4.9.2 The mating parts of the coupler, once properly connected, shall neither separate itself under pressure nor leak.

4.9.3 To protect against the ingress of foreign bodies and pollutants, each part of any coupler shall be provided with a readily removable cover or cap.

NOTE These covers and caps should be made captive to their individual parts of the couplers, so they are not lost.

4.10 Bonding and earthing system

The cable cutting device shall be equipped with termination fittings on identified earthing terminals on the cutting head and on the pump where suitable earthing links can be connected.

4.10.1 The pump shall be equipped with termination fittings to allow the connection of earthling cables with a minimum cross section of at least 16 mm^2.

4.10.2 The cutting head shall be equipped with termination fittings to allow the connection of earthing cables which meet the requirements of EN 61230.

NOTE The earthing terminal shall be placed on the cutting head on such a position that the function of the cutting head will not be effected by possible damages caused by the occurrence of high fault currents.

4.11 Marking

4.11.1 Marking shall be legible and durable.

4.11.2 The following marking shall appear on the cable cutting device.

4.11.2.1 Cutting head

- mark of origin (name or trademark of the manufacturer),
- year of manufacture,
- type,
- number of production or serial number,
- maximum operating pressure,
- maximum cable diameter,
- double triangle symbol (see Figure 2).

4.11.2.2 Insulating hose

The marking specified shall appear along the length of the hose and the interval between the end of a mark and the beginning of the next identical mark shall not be greater than 500 mm.

- mark of origin (name or trademark of the manufacturer),
- year of manufacture,
- type,
- nominal diameter.

4.11.2.3 Insulating hose assembly

The marking specified may be placed on the coupler parts or adjacent to the coupler parts. If marking is placed on the hydraulic hose it shall be clearly distinguished from the marking of 4.11.2.2.

- mark of origin (name or trademark of manufacturer),
- year and month of manufacture,
- maximum operating pressure,
- double triangle symbol (see Figure 2).

4.11.2.4 Pump

- mark of origin (name or trademark of the manufacturer),
- year of manufacture,
- type,
- number of production or serial number,
- maximum operating pressure,
- indication of the types of cutting head(s) to be used with the pump,
- double triangle symbol (see Figure 2).

4.12 Instructions for use

Each cable cutting device shall be accompanied by «Instructions for use». These instructions shall contain all the necessary information concerning the assembly, the use and maintenance of the device so that it is safe in use (see Annex A).

5 Tests

5.1 General

This European Standard provides testing provisions to demonstrate that the cable cutting device comply with the requirements of Clause 4. These testing provisions are primarily intended to be used for type testing to validate the design input.

The tests to be carried out are listed in Annex B. The sequence of tests shall follow the sequences as set out in the text.

A single complete cable cutting device of a particular design shall be subjected to all the tests in the sequence shown.

The type tests shall be carried out on one device.

Unless otherwise indicated the tests shall be carried out under standard atmospheric conditions according to HD 437, i.e. an ambient temperature of +15 °C to +35 °C and a relative humidity of 45 % to 75 %.

The tolerance limits for the applied test values shall be 5 %.

5.2 Inspection, instructions for use and marking

5.2.1 Inspection

The requirements of 4.1, 4.2, 4.3, 4.5, 4.7, 4.8, 4.9 and 4.10 shall be verified by visual or functional inspection and measurements.

NOTE Visual inspection means visual inspection by a person with normal or corrected vision without additional magnification.

5.2.2 Instructions for use

The requirements of 4.12 shall be verified by examination of the instructions for use.

5.2.3 Marking

The durability of the marking is verified by rubbing the marking for 15 s with a piece of lint-free cloth soaked into water and then rubbing it for further 15 s with a lint-free cloth soaked into ethyl alcohol.

The test is considered as passed if the marking is clearly legible and shows no curling or becomes detached after this rubbing.

Marking made by engraving or moulding need not be subjected to this test.

5.3 Test of the insulating hose assembly

The test shall be made according to the selected operating method (see 4.3).

5.3.1 Method A

The insulating hose assembly shall be tested according to EN 62237:2005 with the following criteria:

- 5.3.1.2 “Electric tests on insulating hoses before exposure to humidity” with a test voltage of 36 kV;
- 5.3.1.3 “Electric tests on insulating hoses after exposure to humidity” with a test voltage of 36 kV;

- 5.3.1.4 “Electric tests on insulating after the infliction of a cut on hoses” with a test voltage of 36 kV;
- 5.4.1 “Hydrostatic test”;
- 5.4.2 “Fatigue test”;
- 5.4.3 “Mechanical impulse test” with a test piece according to group II (min. 600 mm) instead test piece according to group I;
- 5.4.4 “Leakage test”;
- 5.4.5 “Change in length test”;
- 5.4.6 “Burst test” with a test piece according to group II (min. 600 mm) instead test piece according to group I;
- 5.4.7 “Cold bend test“.

5.3.2 Method B

The following tests are needed:

- the insulating hose length shall be measured;
- verify that the insulating hose of the insulating hose assembly is connected side cutting head.

No test is needed for the insulation hose assembly made with insulating hose in accordance with the requirements of EN 62237.

5.4 Dielectric strength of the hydraulic fluid

The dielectric strength of the hydraulic fluid shall be measured according to EN 60156.

The test is considered as passed if the breakdown voltage is not less than 10 kV.

5.5 Hardness of the blade(s)

The test shall be carried out according to EN ISO 6507-1 on the cutting blade(s).

The test is considered as passed if the requirement of 4.2.5 is fulfilled.

5.6 Test under stress

The test shall be carried out with the cable cutting device fully assembled and ready for operation with a test probe defined as follows.

The test probe shall be a rod made from brass (CuZn39Pb3, CW614N – see EN 12164) with a diameter of 60 mm and having minimum length of 200 mm.

The test probe shall be placed in the cutting head so that it projects evenly either side of the line of cut of the blade(s) for a distance of at least 50 mm.

NOTE 1 The distance should be 100 mm.

The pump shall be operated until the safety valve operates. This pressure shall be maintained for at least 2 min.

NOTE 2 Should the pressure drop below the value of the operating pressure minus 10 % following operation of the safety valve, the pressure shall be increased again until the safety valve is about to operate.

The test is considered as passed if no visible damage occurs impairing either the security of the operator or the functioning of the device.

5.7 Self-acting opening test

The test shall be carried out with a cable cutting device fully assembled and ready for operation. The cutting head shall be prepared as follows:

- the blade(s) shall be equipped with means capable to apply forces against the opening direction;
- the fixed part of the cutting head shall be positioned so that the blade(s) moves vertically downwards;
- the forces against the opening direction according to Table 1 shall be applied to the blade(s) (see Figure 3) so that they oppose the cutting action and are in the axis of the cutting action.

Table 1 – Forces to be applied to the blade(s) to oppose the opening action

Method of cutting	Force F N
Shearing blades	100
Guillotine-type blades	200

Three steel wires arranged in a bundle but not twisted specified according to EN 10016-2 (diameter 0,5 mm, steel grade C4D, material-number 1.0300), with a length of 450 mm to 500 mm shall be placed in the cutting head. The bundle shall be at a right angles to or perpendicular to the axis of the cutting blade and project equally either side of the line of cut of the blade(s) for a distance of not less than 200 mm.

The wires shall be securely fixed at one end and shall be positioned at the weakest point of the blade(s) which is expected to jam.

The cutting shall be carried out according to the instructions for use.

The test shall be repeated two more times. The wires may be placed at other points of the blade(s) which are considered to be weak.

The test is considered as passed when at the end of all three cutting processes, the cutting head is sufficiently wide open to accept the cable with the maximum permissible diameter.

5.8 Accuracy of cutting

The test shall be carried out with a cable cutting device ready for operation and with a test probe defined below.

The test probe shall be made from high-density polyethylene with a density of 0,94 g/cm³, a tear resistance of (450 ± 50) % and a diameter of (50 ± 2,5) mm. The length of the test probe shall be at least 500 mm.

The cutting head shall be placed on a flat surface. The test probe shall be placed in the cutting head so that a length of (200 ± 2) mm projects beyond the line of cut of the cutting blade(s). The other end of the test probe shall be securely clamped.

The cutting head shall rest in that position without additional means of support.

The cutting shall be carried out according to the instructions for use.

The test is considered as passed if the length of the cut free part of the test probe is (200 ± 10) mm.

5.9 Working force of the pump

The pump shall be operated without a probe until the pressure gauge shows that the maximum operating pressure has been reached. The force needed to operate the safety valve shall be measured at 50 mm from the end of the handle or the pedal (see Figure 4).

The test is considered as passed if the force does not exceed 500 N for units operated by foot, and 300 N for units operated by hand.

5.10 Stability

The test shall be carried out with a cable cutting device ready for operation without a probe.

According to Figure 5 a) the pump shall be placed on a firm plane base which is inclined at 15° and covered with an insulating mat to EN 61111, Class 0. The pump shall be placed at least 50 cm from the lower edge of the surface. The insulating hose and cutting head and other fittings shall be arranged so that they do not adversely influence the test.

The pump shall be operated until the safety valve operates. Thereafter, the pressure is released by operating the reverse flow valve.

After the blade(s) return to the rest (open) position the assembly shall be rotated through 90° in the horizontal plane, on the base, see Figure 5 b).

A visual inspection shall then be made of the pump, hose, couplers and other fittings to verify that there are no insulating hydraulic fluid leaks.

This part of the test shall be repeated twice more. After each test the pump shall be rotated 90° in the same direction of rotation.

The test is considered as passed if the operating pressure of the safety valve was reached in all four positions, no leaks of insulating fluid occurred, and the pump remained in a working position, i.e. was displaced by less than 50 cm and did not tip whilst being operated.

5.11 Operation of the safety valve

The test shall be carried out with a cable cutting device ready for operation without a probe.

A calibrated pressure gauge shall be connected to the pump.

The pump shall be operated until the safety valve operates. The operating pressure of the safety valve shall be recorded from the indication on the calibrated pressure gauge. Then the pump shall be subjected to the resulting pressure for a period of at least 10 min.

Afterwards, the pressure shall be decreased completely and the pump shall be operated again until the safety valve operates. This test shall be repeated four times.

A visual inspection shall then be made of the pump, hose, couplers, cutting head or other fittings to verify that there are no insulating hydraulic fluid leaks.

The test is considered as passed if

- the operating pressure of the safety valve does not exceed the maximum operating pressure specified by the manufacturer,
- there is no insulating hydraulic fluid leak,
- the safety valve operates correctly at the end of the test.

5.12 Pressure strength of the cable cutting device

The test shall be carried out with a cable cutting device ready for operation without a probe.

The pump shall be operated until the operating pressure of the safety valve is reached. The number of pump strokes to reach this pressure shall be recorded.

NOTE Should the pressure drop below the value of the operating pressure following operation of the safety valve, the pressure shall be increased again until the safety valve is about to operate.

The cable cutting device shall then be stored at the ambient temperature without any further changes in pressure for one hour.

After the one hour period, the pressure reading shall be recorded. A visual inspection of the complete device shall be made to verify that there are no leaks of the insulating hydraulic fluids.

The test is considered as passed if

- the safety valve operates after a maximum of 100 pump strokes,
- the pressure recorded does not decrease below the operating pressure of the safety valve by more than 10 %,
- no insulating hydraulic fluid has leaked.

5.13 Functional test

The test shall be carried out with a cable cutting device fully assembled and ready for operation with a test probe defined below.

The cable cutting device shall be placed in a climatic chamber at a temperature of (40 ± 2) °C for 48 h.

A test probe made from high density polyethylene with a density of 0,94 g/cm³, a tear resistance of (450 ± 50) % and having a length of (200 ± 10) mm and a diameter of (50 ± 2,5) mm shall be wrapped with one layer of sheet-steel (370 N/mm²), 1 mm thick and 60 mm wide. The sheet-steel shall be secured to prevent it slipping and it shall be positioned in the centre of the test probe.

The cable cutting device shall be removed from the climate chamber and the test probe shall be placed in the cable cutting device. The test probe shall be positioned so that (100 ± 5) mm projects either side of the line of cut and the sheet steel wrap projects (30 ± 1,5) mm either side of the line of cut. The ambient temperature shall be (20 ± 2) °C.

The cutting action shall be carried out according to the instructions for use within two minutes after the removal from the climate chamber.

The test is considered passed if the cutting is completed according to the instructions for use and there is no leakage of insulating hydraulic fluid.

The test shall then be repeated but with the climatic chamber temperature set at (-20 ± 2) °C.

In addition the working force shall be measured during the cutting action according to 5.9.

The test is considered as passed if the cutting is completed according to the instructions for use, no insulating hydraulic fluid has leaked and the measured force for operation by foot does not exceed 500 N and 300 N for operation by hand.

5.14 Test on earthing system

This test shall be made according to EN 61230:1995, 6.6, and the test arrangement shall be in accordance with Figure 6. To carry on the test, the required values of current and time shall be provided by the user.

6 Conformity assessment of cable cutting devices having completed the production phase

For achieving the conformity assessment during the production phase, EN 61318 shall be used in conjunction with the present standard.

Annex C resulting from a risk analysis on the performance of the cable cutting devices, provides the classification of defects and identifies the associated tests applicable in case of production follow-up.

Key

1 Cutting head

2 Insulating hose assembly

3 Pump

4 Insulating hydraulic fluid

Figure 1 – Example of cable cutting device

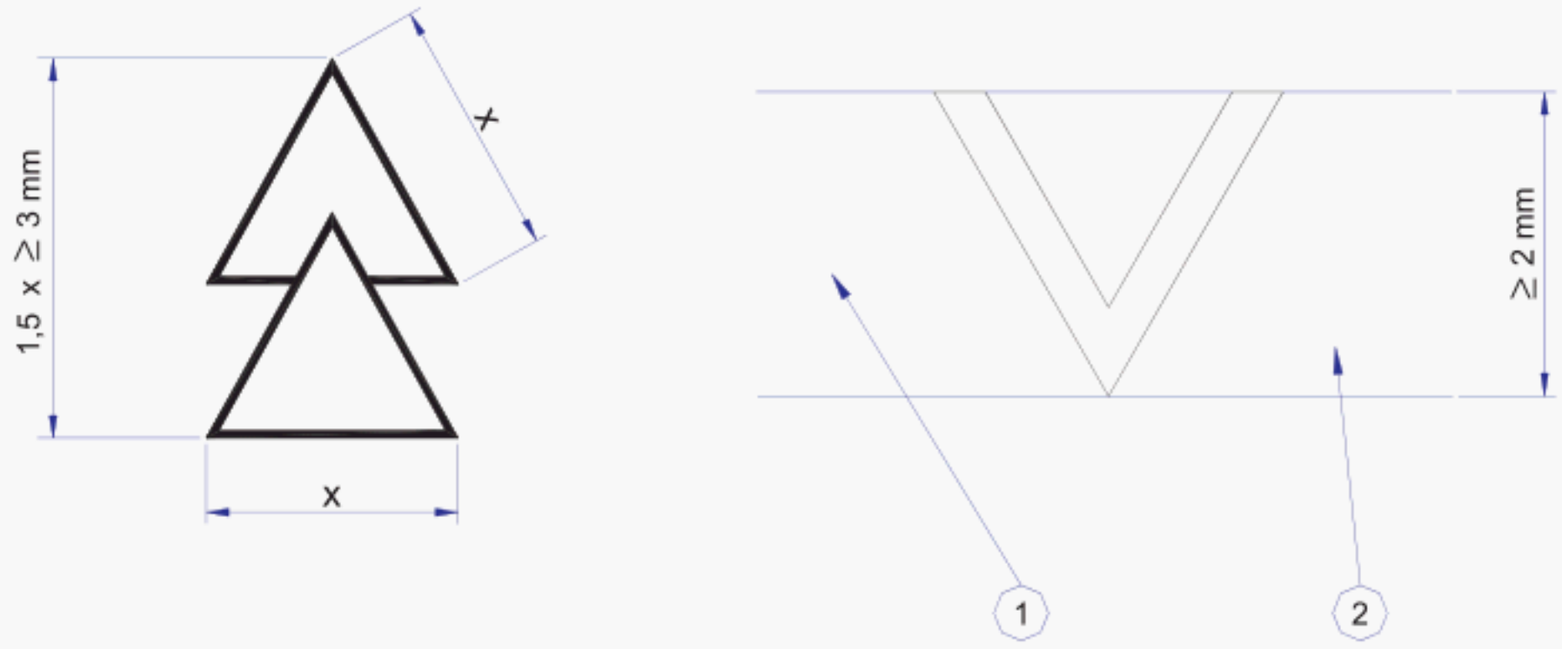

Key

1 Indication of the highest nominal voltage

2 Year of manufacture

Figure 2 – “Double triangle” symbol

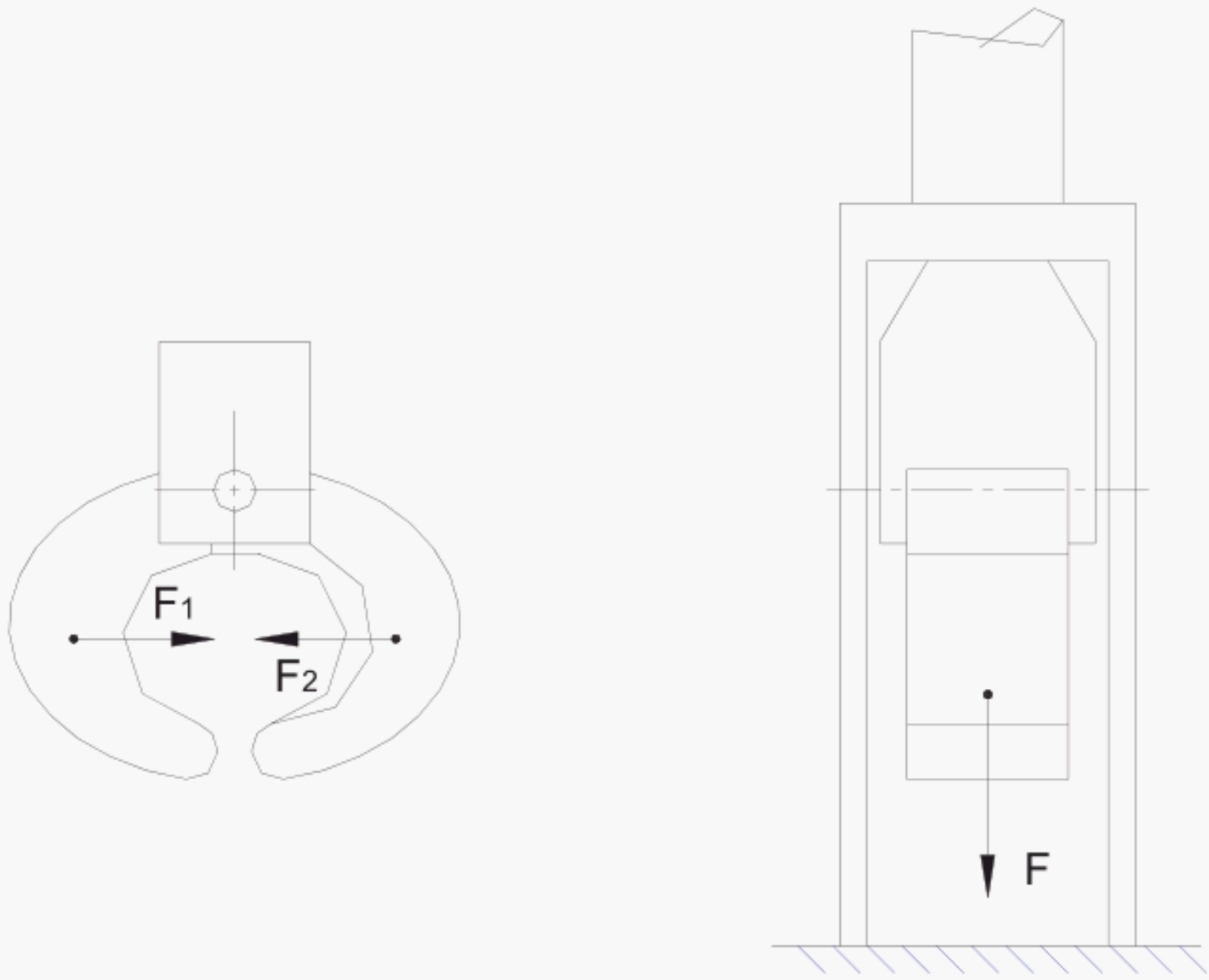

Figure 3 – Self-acting opening test – Tackle-points to strain the blade(s)

Dimensions in mm

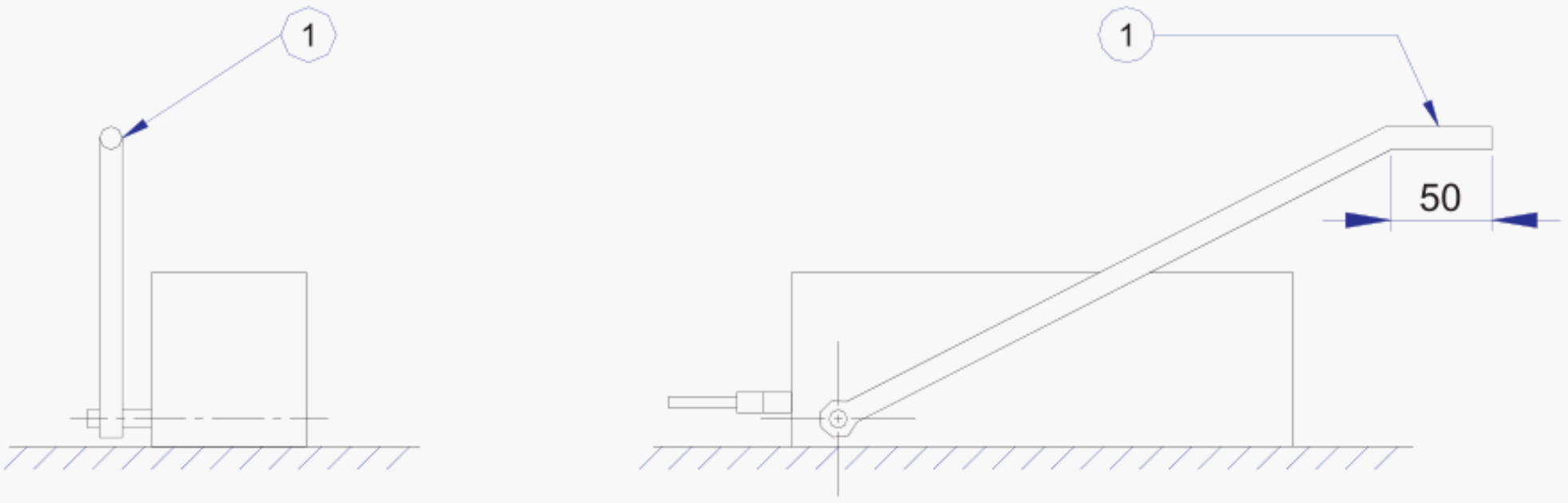

Key

1 Measuring point

Figure 4 – Pump force – Test arrangement

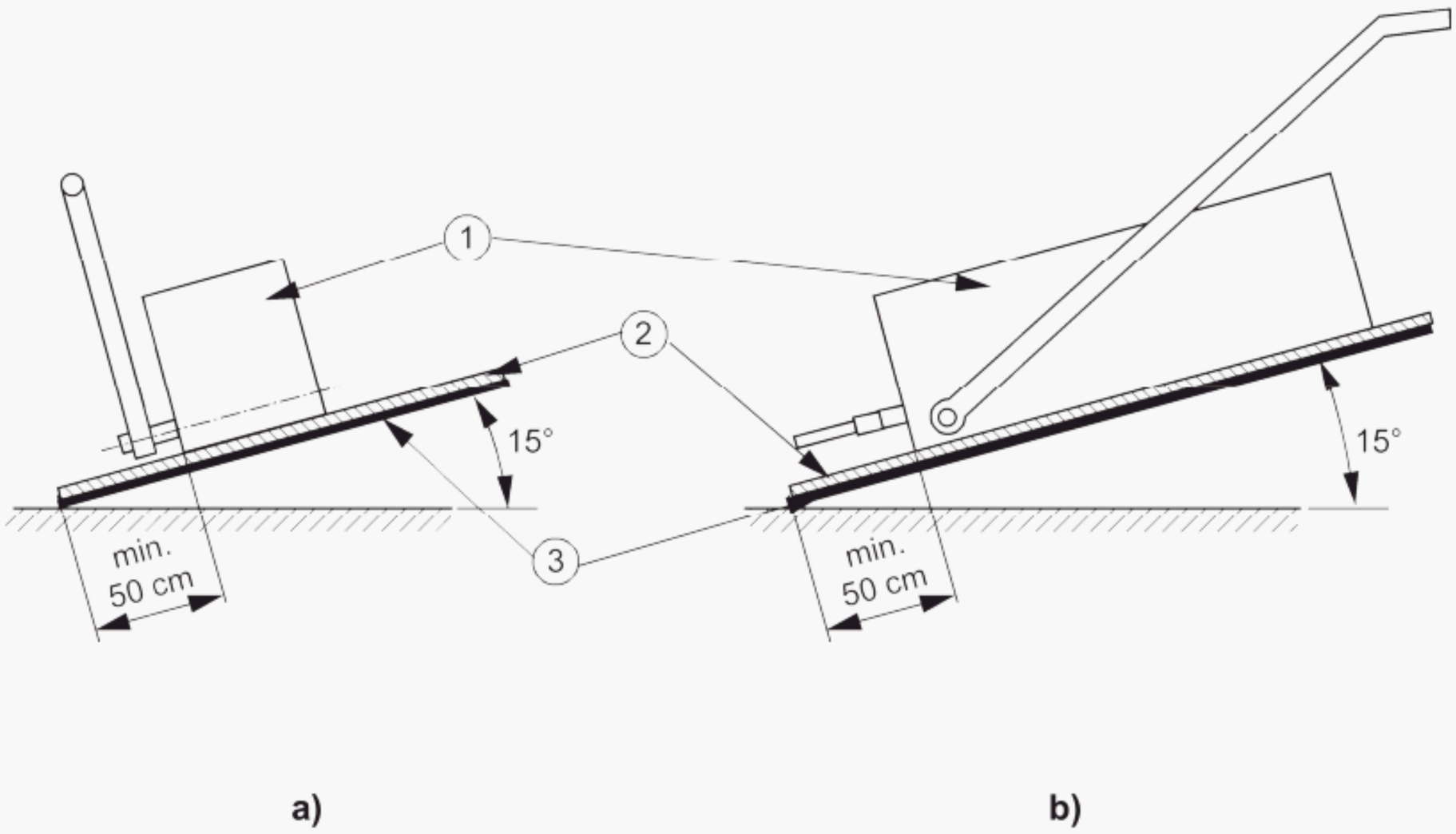

Key

1 Pump

2 An insulating mat to EN 61111, Class 0

3 Firm plane base

Figure 5 – Stability – Test arrangement

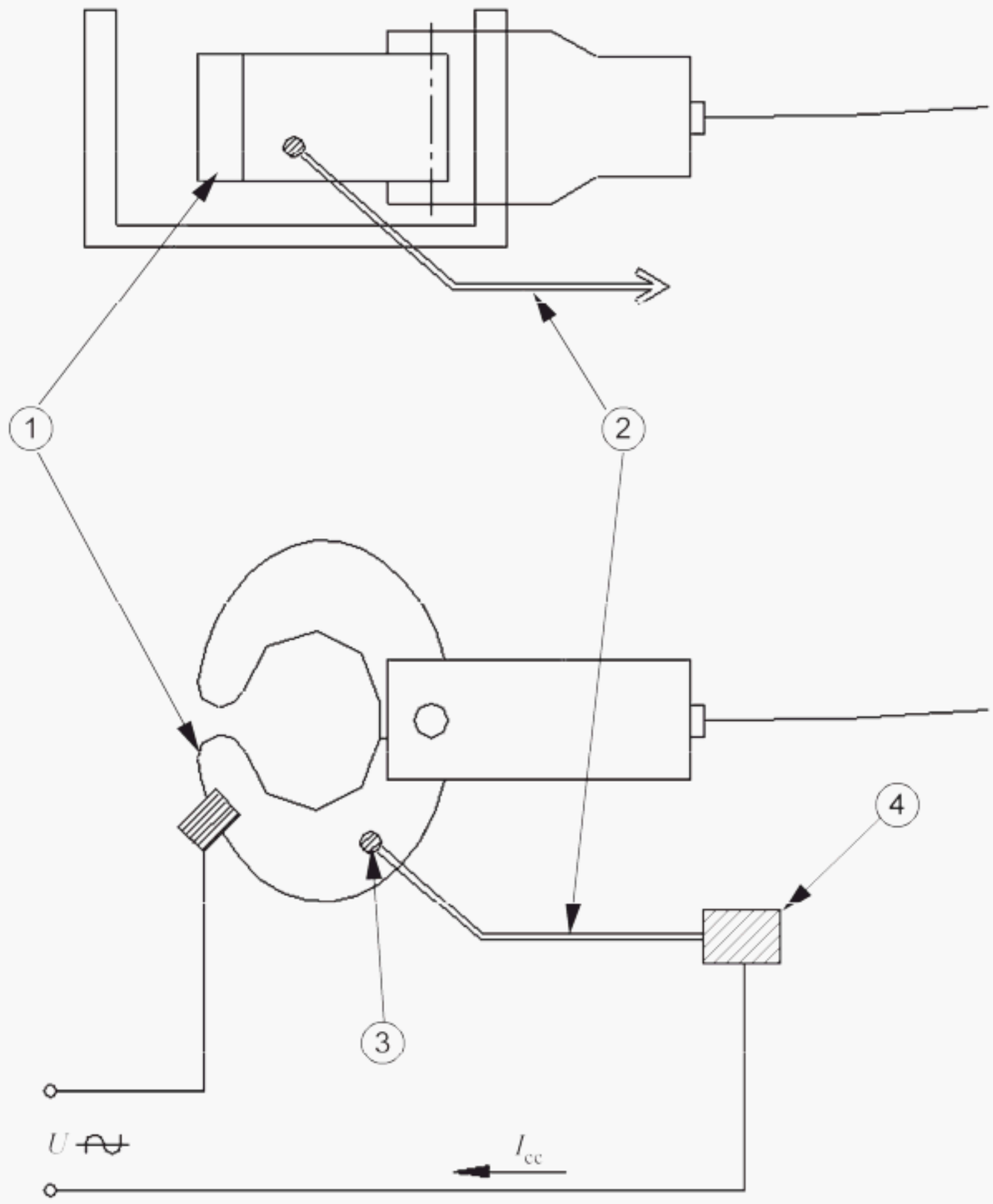

Key

1 Blade

2 Earthing link

3 Termination fitting

4 Test clamp

Figure 6 – Earthing system – Test arrangement

Annex A
(normative)

Instructions for use

A.1 Explanation of marking

- Explanation of the maximum operating pressure.
- Information about the cable diameters that can be cut.
- Information about the importance of the marking on the cutting head, insulating hose, insulating hose assembly and pump.
- Explanation of the marking on the insulating hose and on the insulating hose assembly.
- Explanation of the double triangle symbol (see Figure 2).

A.2 Description of cable cutting device

- Description of single parts (cutting head, insulating hose assembly and pump).
- Description of equipment for operating and controlling.
- Description of hydraulic couplers.
- Information about suitable insulating liquids.
- Description of the filling with insulating hydraulic fluid.
- Description of the cutting action.
- List of technical data.
- Limitation of the voltage.

A.3 Information about use according to the rules and procedures

- Information about the use to verify that the installation is dead.
- Information about cable diameters that can be cut and about cables with special armouring which cannot be cut.
- Information about testing of the cable cutting device before each use, cleaning after each use, maintaining and re-establishing of the clean dry state, careful inspection in suitable intervals by a specialist.
- Information about the application of the cutting head.
- Information that single core cables should be cut only after each of the three phases have been arranged to be cut simultaneously.
- Information that the insulating hose assembly shall be considered as a single complete component.
- Information about the correct way of assembling and dismantling of single components using the couplers.
- Information that the distance between the cutting head and the pump given by the hose length shall be as great as possible.
- Information that in case of smaller distances than the minimum distance, additional personnel protection shall be provided by other means, e.g. earth walls or protective walls.
- Information that a safety zone with a distance of at least 10 m round the location of cutting shall be ensured to prevent access before the cutting is started (Method A).
- Information that a safety zone round the location of cutting shall be ensured to prevent access before the cutting is started according local regulation (Method B).
- Description of the pump with guidance that the pressure gauge shall be monitored/verified during operation and the cutting action shall be performed without interruption.

- Information how the completion of the cutting action can be recognized and how to finish the cutting action.
- Information about the organisational measures which should be adopted linking in with the system control centre before and after the cutting action.
- Information about the safe removal of the cutting head.
- Explanation of how the cable cutting device shall be packed and stored in the transport container(s).
- Information about the intervals and the method of changing the insulating hydraulic fluid, specific data to be kept and the documentation of the date of replacement.
- Information about the permitted user replacement of parts.

A.4 Guidance in case of faults of the cable cutting device

- Information about what to do to ensure safety in the case of faults, e.g. if the cutting action was not finished according to the instruction for use, if the cutting head is damaged during cutting, if the insulating hydraulic fluid leaks.

A.5 Guidance after short circuiting

- Information that the blades may not open automatically at the completion of an operation.
- Information about the repairing of the cable cutting device.

Annex B
(normative)

List of type tests

Table B.1 – List of type tests

N°	Test	Device (D) or component (c.)	Requirements	Type test
1	Inspection	D	4.1, 4.2, 4.3, 4.5, 4.7, 4.8, 4.9, 4.10	5.2.1
	Instructions for use	D	4.12	5.2.2
	Marking	D	4.11	5.2.3
2	Test of the insulating hose assembly	c.	4.3	5.3
3	Dielectric strength of the hydraulic fluid	c.	4.4	5.4
4	Hardness of the blade(s)	c.	4.2.5	5.5
5	Test under stress	D	4.1.2	5.6
6	Self-acting opening	D	4.2.7	5.7
7	Accuracy of cutting	D	4.2.3	5.8
8	Working force of the pump	D	4.5.3	5.9
9	Stability	D	4.5.2	5.10
10	Operation of the safety valve	D	4.6	5.11
11	Pressure strength of the device	D	4.1.2, 4.5.5	5.12
12	Functional test	D	4.1.1, 4.5.3	5.13
13	Test on earthing system	c.	4.10	5.14

Annex C
(normative)

Classification of defects and tests to be allocated

This annex was developed to address the level of defects of cable cutting devices (critical, major or minor) in a consistent manner (see EN 61318). Table C.1 identifies the requirements with the associated defects and tests to be allocated.

Table C.1 – Classification of defects and associated requirements and tests

Requirements	Critical	Major	Minor	Tests
Inspection	X			5.2
Test of the insulating hose assembly		X		5.3
Dielectric strength of the hydraulic fluid	X			5.4
Hardness of the blade			X	5.5
Test under stress		X		5.6
Self-acting opening			X	5.7
Accuracy of cutting			X	5.8
Working force of the pump			X	5.9
Stability			X	5.10
Operation of the safety valve	X			5.11
Pressure strength	X			5.12
Functional tests		X		5.13
Earthing connection			X	5.14

The unit of the sample is the complete device or component (see Table B.1).

Annex D
(informative)

Background

At the first meeting of CLC/TC 78 it was decided to set up Working Group 3 “Cable earthing device”.

The proposal was worked out by the German Technical Body “Tools for live working”.

The proposal specifies requirements and tests with the aim to improve the security for the operator.

The cable cutting device is used to verify whether the cable is dead.

In some countries it is necessary to limit to a single-phase fault the first action of cutting a multiple-conductor cable, so that the protective devices operate on single-phase fault before a two-phase or three-phase short-circuit occurs.

In some cases, the application range is determined by the composition of the cable (diameter, number of core) and the rules for installation (position in gallery, depth in the ground). These two data give to the operator the mean to make distinction between low, medium or high voltage cables.

The scope of this proposal is limited to nominal voltages up to and including 30 kV based on the experience of several years. If cable cutting devices are applied to higher voltages supplementary measures (for example derived from 4.3.1, 4.3.2) may be necessary according to the awaited stresses. These measures shall be agreed between manufacturer and user.

It was initially intended to connect the single parts of the cable cutting device in such a way that the connections could be disassembled with tools only. To simplify the handling a connecting unit detachable by hand was incorporated between the pump and the insulating hose assembly.

At present two principles of cutting are used in practice:

- the shearing blades are arranged round the cable to be cut in that way that both blades move coaxially to the cable towards one another;

- in case of guillotine-type blade the cable is placed between guide rails, the counter bearing is installed and the blade is impressed against the counter bearing from one side into the cable.

The mass of the cutting head of the cable cutting device is limited to one person handling to make sure that only one person can attach or detach the cutting head at the very often narrow work site.

In order to avoid the blade(s) getting jammed during the cutting, the requirement of 4.2.7 was specified that the blade (blades) shall open in a self-acting way from any position when the pressure is released.

The length of the insulating hose was specified based on the experience with cable cutting devices. Danger for the operator e.g. through influence of the accidental arc is not expected because of the distance specified by experience which has been made up until now with cable cutting devices.

The length of the insulating hose should be long enough in order to avoid prohibited pulling strength between pump and cutting head during the increase of pressure which causes the shortening of the insulating hose.

The proposal for the maintenance of the standard was worked out by the German Technical Body “Tools for live working”.

In the scope were defined limits for the pressure inside the cable cutting devices, to ensure that the products are outside the Pressure Equipment Directive.

The definitions were corrected and defined more clearly.

Method A: For the test of the insulated hose assembly detailed references to EN 62237 with some changes were inserted.

A note was inserted in 5.6 and 5.12 to consider the kind of working of the safety valve.

The parameters of the metal wire were inserted in 5.7.

Subclause 5.10 was renamed into “Stability” and the conditions of the test were amended.

Method A: The length of the insulating hose was changed from 5 m to 10 m, because of the possible danger for the operator. In Annex A is recommended a distance of minimum 10 m as safety zone.

Method B: The total length of the insulating hose assembly was changed from 5 m to 3 m of non insulating hose plus 320 mm of EN 62237 insulating hose which gives a sufficient insulation for the worker.

This page deliberately left blank

NO COPYING WITHOUT BSI PERMISSION EXCEPT AS PERMITTED BY COPYRIGHT LAW

British Standards Institution (BSI)

BSI is the national body responsible for preparing British Standards and other standards-related publications, information and services.

BSI is incorporated by Royal Charter. British Standards and other standardization products are published by BSI Standards Limited.

About us

We bring together business, industry, government, consumers, innovators and others to shape their combined experience and expertise into standards -based solutions.

The knowledge embodied in our standards has been carefully assembled in a dependable format and refined through our open consultation process. Organizations of all sizes and across all sectors choose standards to help them achieve their goals.

Information on standards

We can provide you with the knowledge that your organization needs to succeed. Find out more about British Standards by visiting our website at bsigroup.com/standards or contacting our Customer Services team or Knowledge Centre.

Buying standards

You can buy and download PDF versions of BSI publications, including British and adopted European and international standards, through our website at bsigroup.com/shop, where hard copies can also be purchased.

If you need international and foreign standards from other Standards Development Organizations, hard copies can be ordered from our Customer Services team.

Subscriptions

Our range of subscription services are designed to make using standards easier for you. For further information on our subscription products go to bsigroup.com/subscriptions.

With **British Standards Online (BSOL)** you'll have instant access to over 55,000 British and adopted European and international standards from your desktop. It's available 24/7 and is refreshed daily so you'll always be up to date.

You can keep in touch with standards developments and receive substantial discounts on the purchase price of standards, both in single copy and subscription format, by becoming a **BSI Subscribing Member**.

PLUS is an updating service exclusive to BSI Subscribing Members. You will automatically receive the latest hard copy of your standards when they're revised or replaced.

To find out more about becoming a BSI Subscribing Member and the benefits of membership, please visit bsigroup.com/shop.

With a **Multi-User Network Licence (MUNL)** you are able to host standards publications on your intranet. Licences can cover as few or as many users as you wish. With updates supplied as soon as they're available, you can be sure your documentation is current. For further information, email bsmusales@bsigroup.com.

Revisions

Our British Standards and other publications are updated by amendment or revision.

We continually improve the quality of our products and services to benefit your business. If you find an inaccuracy or ambiguity within a British Standard or other BSI publication please inform the Knowledge Centre.

Copyright

All the data, software and documentation set out in all British Standards and other BSI publications are the property of and copyrighted by BSI, or some person or entity that owns copyright in the information used (such as the international standardization bodies) and has formally licensed such information to BSI for commercial publication and use. Except as permitted under the Copyright, Designs and Patents Act 1988 no extract may be reproduced, stored in a retrieval system or transmitted in any form or by any means – electronic, photocopying, recording or otherwise – without prior written permission from BSI. Details and advice can be obtained from the Copyright & Licensing Department.

Useful Contacts:

Customer Services
Tel: +44 845 086 9001
Email (orders): orders@bsigroup.com
Email (enquiries): cservices@bsigroup.com

Subscriptions
Tel: +44 845 086 9001
Email: subscriptions@bsigroup.com

Knowledge Centre
Tel: +44 20 8996 7004
Email: knowledgecentre@bsigroup.com

Copyright & Licensing
Tel: +44 20 8996 7070
Email: copyright@bsigroup.com

BSI Group Headquarters

389 Chiswick High Road London W4 4AL UK

bsi.

...making excellence a habit.™