Licensed Copy: sheffieldun sheffieldun, na, Mon Nov 06 09:46:29 GMT+00:00 2006, Uncontrolled Copy, (c) BSI

BRITISH STANDARD

BS EN 534:2006

Corrugated bitumen sheets — Product specification and test methods

The European Standard EN 534:2006 has the status of a British Standard

ICS 91.100.50

NO COPYING WITHOUT BSI PERMISSION EXCEPT AS PERMITTED BY COPYRIGHT LAW

British Standards

National foreword

This British Standard is the official English language version of EN 534:2006. It supersedes BS EN 534:1998 which is withdrawn.

The UK participation in its preparation was entrusted by Technical Committee B/542, Roofing and cladding products for discontinuous laying, to Subcommittee B/542/4, Fibre-reinforced cement sheeting for roofing, which has the responsibility to:

— aid enquirers to understand the text;

— present to the responsible international/European committee any enquiries on the interpretation, or proposals for change, and keep UK interests informed;

— monitor related international and European developments and promulgate them in the UK.

A list of organizations represented on this subcommittee can be obtained on request to its secretary.

Cross-references

The British Standards which implement international or European publications referred to in this document may be found in the *BSI Catalogue* under the section entitled "International Standards Correspondence Index", or by using the "Search" facility of the *BSI Electronic Catalogue* or of British Standards Online.

This publication does not purport to include all the necessary provisions of a contract. Users are responsible for its correct application.

Compliance with a British Standard does not of itself confer immunity from legal obligations.

Summary of pages

This document comprises a front cover, an inside front cover, the EN title page, pages 2 to 40, an inside back cover and a back cover.

The BSI copyright notice displayed in this document indicates when the document was last issued.

This British Standard was published under the authority of the Standards Policy and Strategy Committee on 30 June 2006

© BSI 2006

ISBN 0 580 48502 1

Amendments issued since publication

Amd. No.	Date	Comments

Licensed Copy: sheffieldun sheffieldun, na, Mon Nov 06 09:46:29 GMT+00:00 2006, Uncontrolled Copy, (c) BSI

EUROPEAN STANDARD

NORME EUROPÉENNE

EUROPÄISCHE NORM

EN 534

June 2006

ICS 91.100.50

Supersedes EN 534:1998

English Version

Corrugated bitumen sheets - Product specification and test methods

Plaques ondulées bitumées - Spécifications des produits et méthodes d'essai

Bitumen Wellplatten - Produktfestlegungen und Prüfverfahren

This European Standard was approved by CEN on 3 May 2006.

CEN members are bound to comply with the CEN/CENELEC Internal Regulations which stipulate the conditions for giving this European Standard the status of a national standard without any alteration. Up-to-date lists and bibliographical references concerning such national standards may be obtained on application to the Central Secretariat or to any CEN member.

This European Standard exists in three official versions (English, French, German). A version in any other language made by translation under the responsibility of a CEN member into its own language and notified to the Central Secretariat has the same status as the official versions.

CEN members are the national standards bodies of Austria, Belgium, Cyprus, Czech Republic, Denmark, Estonia, Finland, France, Germany, Greece, Hungary, Iceland, Ireland, Italy, Latvia, Lithuania, Luxembourg, Malta, Netherlands, Norway, Poland, Portugal, Romania, Slovakia, Slovenia, Spain, Sweden, Switzerland and United Kingdom.

EUROPEAN COMMITTEE FOR STANDARDIZATION
COMITÉ EUROPÉEN DE NORMALISATION
EUROPÄISCHES KOMITEE FÜR NORMUNG

Management Centre: rue de Stassart, 36 B-1050 Brussels

© 2006 CEN All rights of exploitation in any form and by any means reserved worldwide for CEN national Members.

Ref. No. EN 534:2006: E

Licensed Copy: sheffieldun sheffieldun, na, Mon Nov 06 2006 09:46:29 GMT+00:00 2006, Uncontrolled Copy, (c) BSI

Licensed Copy: sheffieldun sheffieldun, na, Mon Nov 06 09:46:29 GMT+00:00 2006, Uncontrolled Copy, (c) BSI

Contents

Page

Foreword 4
1 Scope 5
2 Normative references 5
3 Symbols and abbreviations 5
4 General 5
5 Requirements 6
5.1 Geometrical properties 6
5.1.1 Length 6
5.1.2 Width 6
5.1.3 Thickness 6
5.1.4 Height of corrugations 6
5.1.5 Pitch of corrugations 6
5.1.6 Squareness 7
5.2 Mechanical properties 7
5.2.1 Bending under downward load 7
5.2.2 Impact strength 7
5.2.3 Tearing strength 7
5.3 Physical properties 7
5.3.1 Water impermeability 7
5.3.2 Proportion of bitumen 7
5.3.3 Mass 7
5.3.4 Homogeneity of the product 8
5.3.5 Water absorption 8
5.3.6 Slip resistance 8
5.3.7 Load bearing 8
5.4 Durability 8
5.4.1 Tearing strength after freeze/thaw ageing 8
5.4.2 Water impermeability after freeze/thaw ageing 8
5.4.3 Thermal coefficient 8
5.5 Fire performance 8
5.5.1 Reaction to fire 8
5.5.2 External fire performance 8
6 Sampling and conditioning 9
6.1 Sample preparation 9
6.2 Cutting of the corrugated bitumen sheet 10
7 Test methods 11
7.1 Geometrical properties 11
7.1.1 Length 11
7.1.2 Width 12
7.1.3 Thickness 12
7.1.4 Height of corrugations 13
7.1.5 Pitch of corrugations 14
7.1.6 Squareness 15
7.2 Mechanical properties 18
7.2.1 Bending under downward load 18
7.2.2 Impact strength 20
7.2.3 Tearing strength 21
7.3 Physical properties 23

7.3.1 Water impermeability 23
7.3.2 Proportion of bitumen 24
7.3.3 Mass 24
7.3.4 Homogeneity of the product 25
7.3.5 Water absorption 25
7.4 Durability 26
7.4.1 Tearing strength after freeze/thaw ageing 26
7.4.2 Water impermeability after freeze/thaw ageing 26
7.4.3 Thermal coefficient 26
7.4.4 Frost resistance conditioning 27
7.5 Fire performance 28
7.5.1 Reaction to fire 28
7.5.2 External fire performance 28

8 Evaluation of conformity 28
8.1 General 28
8.2 Initial type testing 28
8.3 Factory production control (FPC) 29
8.3.1 General 29
8.3.2 Equipment 29
8.3.3 Raw materials and components 29
8.3.4 Non-conforming products 29
8.3.5 Frequency of testing 29
8.3.6 Tests methods 29

9 Marking 29

Annex A (normative) Frequencies of testing for factory production control 31

Annex ZA (informative) Clause of this European Standard addressing the provisions of the EU Construction Products Directive (89/106/EEC) 32
ZA.1 Scope and relevant clauses 32
ZA.2 Procedure for the attestation of conformity of corrugated bitumen sheets 34
ZA.2.1 Systems of attestation of conformity 34
ZA.2.2 EC Certificate and Declaration of conformity 37
ZA.3 CE marking 39

Licensed Copy: sheffieldun sheffieldun, na, Mon Nov 06 09:46:29 GMT+00:00 2006, Uncontrolled Copy, (c) BSI

Licensed Copy: sheffieldun sheffieldun, na, Mon Nov 06 09:46:29 GMT+00:00 2006, Uncontrolled Copy, (c) BSI

Foreword

This document (EN 534:2006) has been prepared by Technical Committee CEN/TC 128 “Roof covering products for discontinuous laying and products for wall cladding”, the secretariat of which is held by IBN.

This European Standard shall be given the status of a national standard, either by publication of an identical text or by endorsement, at the latest by December 2006, and conflicting national standards shall be withdrawn at the latest by March 2008.

This document supersedes EN 534:1998.

This document has been prepared under a mandate given to CEN by the European Commission and the European Free Trade Association, and supports essential requirements of EU Directive(s).

For relationship with EU Directive(s), see informative Annex ZA, which is an integral part of this document.

According to the CEN/CENELEC Internal Regulations, the national standards organizations of the following countries are bound to implement this European Standard: Austria, Belgium, Cyprus, Czech Republic, Denmark, Estonia, Finland, France, Germany, Greece, Hungary, Iceland, Ireland, Italy, Latvia, Lithuania, Luxembourg, Malta, Netherlands, Norway, Poland, Portugal, Romania, Slovakia, Slovenia, Spain, Sweden, Switzerland and United Kingdom.

Licensed Copy: sheffieldun sheffieldun, na, Mon Nov 06 09:46:29 GMT+00:00 2006, Uncontrolled Copy, (c) BSI

1 Scope

This European Standard specifies the technical properties and establishes the test and inspection methods for finished corrugated bitumen sheets on leaving the factory. It also provides for the evaluation of conformity of products with the requirements of this standard.

2 Normative references

The following referenced documents are indispensable for the application of this document. For dated references, only the edition cited applies. For undated references, the latest edition of the referenced document (including any amendments) applies.

ENV 1187, *Test methods for external fire exposure to roofs*

EN 13501-1, *Fire classification of construction products and building elements - Part 1: Classification using test data from reaction to fire tests*

EN 13501-5, *Fire classification of construction products and building elements - Part 5: Classification using data from external fire exposure to roofs tests*

EN ISO 9001, *Quality management systems - Requirements (ISO 9001:2000)*

ISO 7892, *Vertical building elements -- Impact resistance tests -- Impact bodies and general test procedures*

3 Symbols and abbreviations

L length of the sheet [mm]

w width of the sheet [mm]

H height of corrugations [mm]

f deflection of the sheet under stress [mm]

e nominal thickness [mm]

P mass of the sheet [kg/m^2]

F load [N]

p pitch of corrugations [mm]

E squareness [mm/m]

α thermal coefficient [1/K]

4 General

Corrugated bitumen sheets are produced using a homogeneous mixture of organic and/or inorganic fibres and bitumen. The shape and the structure of corrugated bitumen sheets and the quality of the raw materials guarantee the properties.

Corrugated bitumen sheets may be spun-dyed. They may also be supplied with a coloured or colourless adhesive surface coating, which in turn may or may not have a covering of granules or fine flakes.

Corrugated bitumen sheets may be manufactured as a mono-layer or a multi-layer product.

Corrugated bitumen sheets are divided into category R and category S depending on their mechanical properties. For category R, all mechanical properties have to pass the threshold values of that category.

For roofing applications, category R products are suitable for most climatic conditions, while Category S products may require special installation depending on the climatic conditions.

For cladding applications, both categories are suitable.

The manufacturer's installation guide shall be consulted to ensure that the product is installed in the correct manner for its category.

5 Requirements

5.1 Geometrical properties

5.1.1 Length

When tested according to 7.1.1, the tolerance on length L shall be + 1,0 %, – 0,2 %.

5.1.2 Width

When tested according to 7.1.2, the tolerance on width w shall be ± 2 %.

5.1.3 Thickness

When tested according to 7.1.3, the tolerance on thickness e shall be ± 10 %.

The thickness of the corrugated bitumen sheets shall be measured including any surface relief (surface pattern) on the upper and lower sides (see Figure 4).

NOTE Due to the fact that the relief of the surfaces may be very different (e.g. from one manufacturer to the other), the measurement of the thickness will give only some descriptive information and therefore cannot be directly compared between different products.

5.1.4 Height of corrugations

When tested according to 7.1.4, the tolerance on the height of corrugations H shall be ± 6 %.

For corrugated bitumen sheets with various corrugation heights, all the declared corrugation heights shall be measured.

5.1.5 Pitch of corrugations

When tested according to 7.1.5, the tolerance on the pitch of corrugations p shall be ± 3 %.

For corrugated bitumen sheets with various pitches and/or period of corrugation, all the declared pitches and/or periods shall be measured.

Licensed Copy: sheffieldun sheffieldun, na, Mon Nov 06 09:46:29 GMT+00:00 2006, Uncontrolled Copy, (c) BSI

Licensed Copy: sheffieldun sheffieldun, na, Mon Nov 06 09:46:29 GMT+00:00 2006, Uncontrolled Copy, (c) BSI

5.1.6 Squareness

When tested according to 7.1.6, the squareness E shall be less than or equal to 4 mm/m.

5.2 Mechanical properties

5.2.1 Bending under downward load

When tested according to 7.2.1, the minimum load for a deflection of 1/200 of a span of 620 mm shall be:

— category R ≥ 1400 N/m^2

— category S > 700 N/m^2

NOTE For calculation of maximum permissible load in manufacturers' installation guides, other methods may be used particularly in case of sheet shapes that do not allow the distributed downward load described in 7.2.1 to be applied.

5.2.2 Impact strength

When tested according to 7.2.2, the falling height with a span of 620 mm shall be:

— category R = 400 mm;

— category S = 250 mm.

This requirement is not relevant for external wall finishing products.

5.2.3 Tearing strength

When tested according to 7.2.3, the tear threshold value shall be greater than:

— category R = 200 N;

— category S = 150 N.

Where, in the case of a corrugated bitumen sheet with various corrugation heights, the manufacturer defines which corrugation has to be used for fixing, only this corrugation has to be tested.

5.3 Physical properties

5.3.1 Water impermeability

When tested according to 7.3.1, no drop of water shall pass through the sheet after 48 h.

5.3.2 Proportion of bitumen

When tested according to 7.3.2, the bitumen content shall be equal to or greater than 40 %.

The properties are measured without any covering of granules or fine flakes.

5.3.3 Mass

When tested according to 7.3.3, the tolerance on the declared mass (expressed in kg/m^2) shall be ± 10 %.

Licensed Copy: sheffieldun sheffieldun, na, Mon Nov 06 09:46:29 GMT+00:00 2006, Uncontrolled Copy, (c) BSI

5.3.4 Homogeneity of the product

When tested according to 7.3.4, there shall be no area larger than 1 cm^2 without bitumen.

5.3.5 Water absorption

When tested according to 7.3.5, the water absorption shall be less than 20 % of the mass of the sheet.

The properties are measured without any covering of granules or fine flakes.

5.3.6 Slip resistance

Due to their rough surfaces, corrugated bitumen sheets are not slippery products.

5.3.7 Load bearing

Installation guidelines shall recommend not to permit walking between the purlins (load bearing capacity is not covered by this product standard).

5.4 Durability

5.4.1 Tearing strength after freeze/thaw ageing

When tested according to 7.4.1, the tearing strength shall not be lower than the initial threshold values (5.2.3).

5.4.2 Water impermeability after freeze/thaw ageing

When tested according to 7.4.2, no drop of water shall pass through the sheet after 48 h.

5.4.3 Thermal coefficient

When tested according to 7.4.3, the value of α shall be less than 100×10^{-6} 1/K.

5.5 Fire performance

5.5.1 Reaction to fire

This characteristic shall be declared when subject to regulatory requirements and may be declared when not subject to such requirements. Where the manufacturer wishes to make a declaration of the reaction to fire performance of his corrugated bitumen sheets (e.g. when they are subject to regulatory requirements), the sheets shall be tested and classified in accordance with 7.5.1.

5.5.2 External fire performance

This characteristic shall be declared when subject to regulatory requirements and may be declared when not subject to such requirements. Where the manufacturer wishes to make a declaration of the external fire performance of his corrugated bitumen sheets (e.g. when they are subject to regulatory requirements), the sheets shall be tested and classified in accordance with 7.5.2.

Licensed Copy: sheffieldun sheffieldun, na, Mon Nov 06 09:46:29 GMT+00:00 2006, Uncontrolled Copy, (c) BSI

6 Sampling and conditioning

6.1 Sample preparation

Details of sampling and sample preparation for both type testing and factory production control testing are given in Table 1.

Table 1 — Sampling and conditions of test specimens

		Number of samples	Width of samples	Length of samples	Conditioning	Cutting of the sheet
7.1	**Geometrical properties**					
7.1.1	Length	3	Entire sheet	Entire sheet	Required A[a]	No
7.1.2	Width					No
7.1.3	Thickness	1	Entire sheet	Entire sheet	Required A[a]	Only if necessary
7.1.4	Height of corrugation					No
7.1.5	Pitch of corrugation					Only if necessary
7.1.6	Squareness					No
7.2	**Mechanical properties**					
7.2.1	Bending under downward load	5	Entire sheet		Required B	No
7.2.2	Impact strength	5	Entire sheet		Required B	No
7.2.3	Tearing strength	5	3 corrug.[b]	150 mm	Required B	See Figure 1
7.3	**Physical properties**					
7.3.1	Water impermeability	1	3 corrugb	150 mm	Required A[a]	See Figure 2
7.3.2	Proportion of bitumen	3	50 mm	100 mm	Required A[a]	See Figure 2
7.3.3	Mass	3	Entire sheet		Required B[a]	No
7.3.4	Homogeneity of the product	12	½ corrugb	200 mm	Required A[a]	See Figure 2
7.3.5	Water absorption	3	2 corrugb	200 mm	Required B[a]	See Figure 2
7.4	**Durability**					
7.4.1	Tearing strength after freeze/thaw ageing	5	3 corrugb	150 mm	Required A[a]	See Figure 1
7.4.2	Water impermeability after freeze/thaw ageing	1	3 corrugb	150 mm	Required A[a]	See Figure 1
7.4.3	Thermal coefficient	2	1 corrug.	250 mm	Required B[a]	See Figure 1

[a] In case of testing during production, the corrugated bitumen sheet may be tested without conditioning (A or B). If the test cannot be performed immediately, the corrugated bitumen sheet shall be stored right away at laboratory conditions.

[b] If the corrugated bitumen sheet has a flat part, this shall be considered as one corrugation.

A The test pieces shall be stored at laboratory conditions for at least 7 days.

B The test pieces shall be conditioned at (23 ± 2) °C and (50 ± 10) % relative humidity for at least 7 days.

For reaction to fire and external fire performance, the number of samples and the conditioning shall be according to the requirements of EN 13501-1 and EN 13501-5 respectively.

6.2 Cutting of the corrugated bitumen sheet

Figures 1 and 2 show the positions from which samples shall be taken, with the numbers referring to the test subclause in the standard. Samples shall not be taken within the area of 200 mm from either end.

Dimensions in millimeters

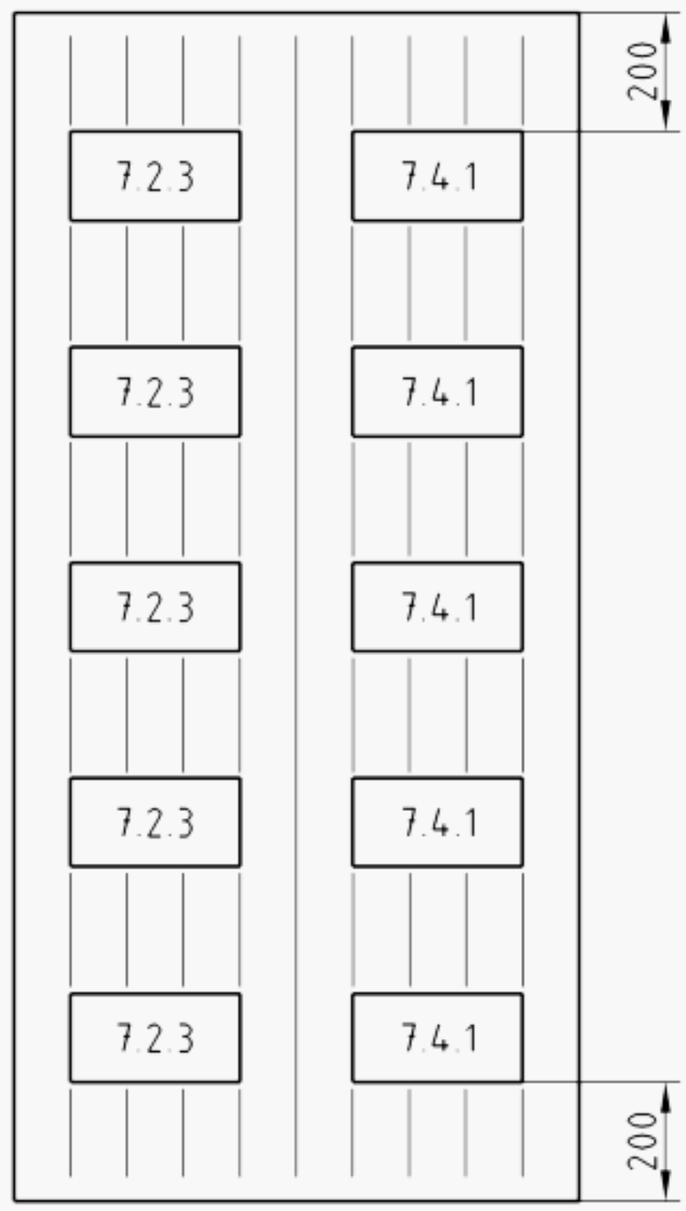

Figure 1 — Positions from which samples are taken

Licensed Copy: sheffieldun sheffieldun, na, Mon Nov 06 09:46:29 GMT+00:00 2006, Uncontrolled Copy, (c) BSI

Dimensions in millimetres

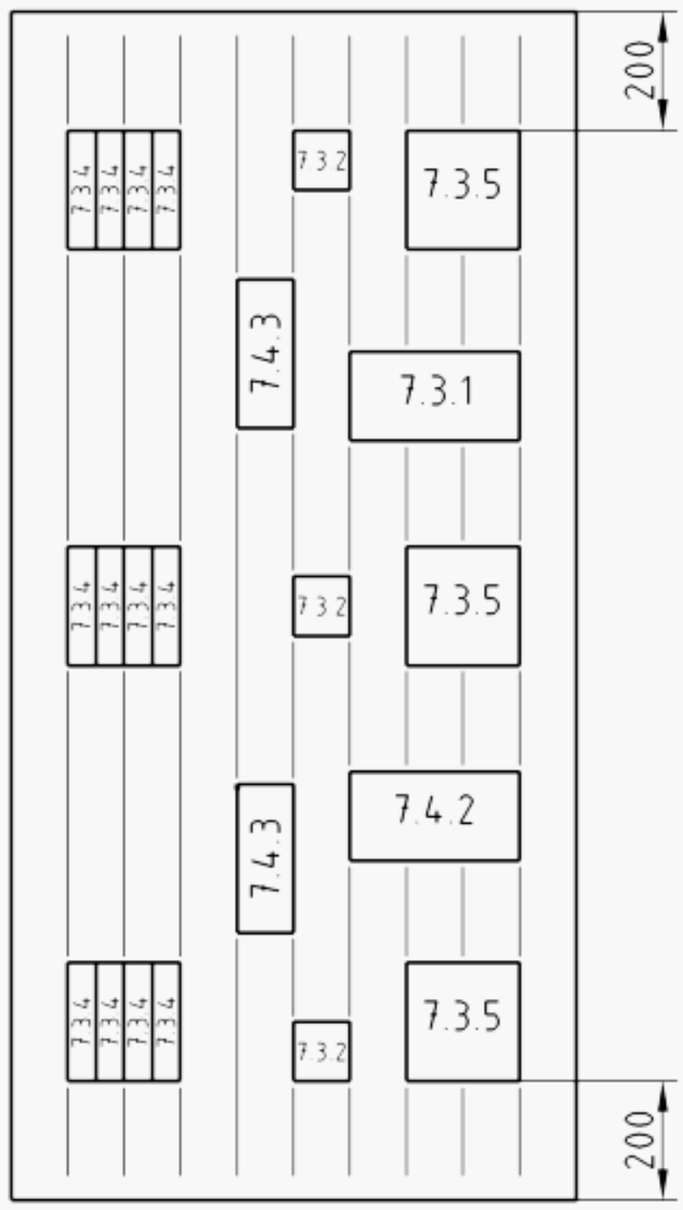

Figure 2 — Positions from which samples are taken

7 Test methods

7.1 Geometrical properties

7.1.1 Length

7.1.1.1 Equipment

The test equipment is shown in Figure 3 and consists of a precision ruler with 0,5 mm divisions and a stable flat plane.

7.1.1.2 Procedure

The measurement shall be taken while the sheet is supported on a stable flat plane.

The length shall be measured either at the crown of the corrugation or in the valley of the corrugation on the second and penultimate corrugations.

The test is carried out on 3 different corrugated bitumen sheets.

7.1.1.3 Results

The result is the mean of the three mean values of the two measured values of each corrugated bitumen sheet.

Licensed Copy: sheffieldun sheffieldun, na, Mon Nov 06 09:46:29 GMT+00:00 2006, Uncontrolled Copy, (c) BSI

Dimensions in millimetres

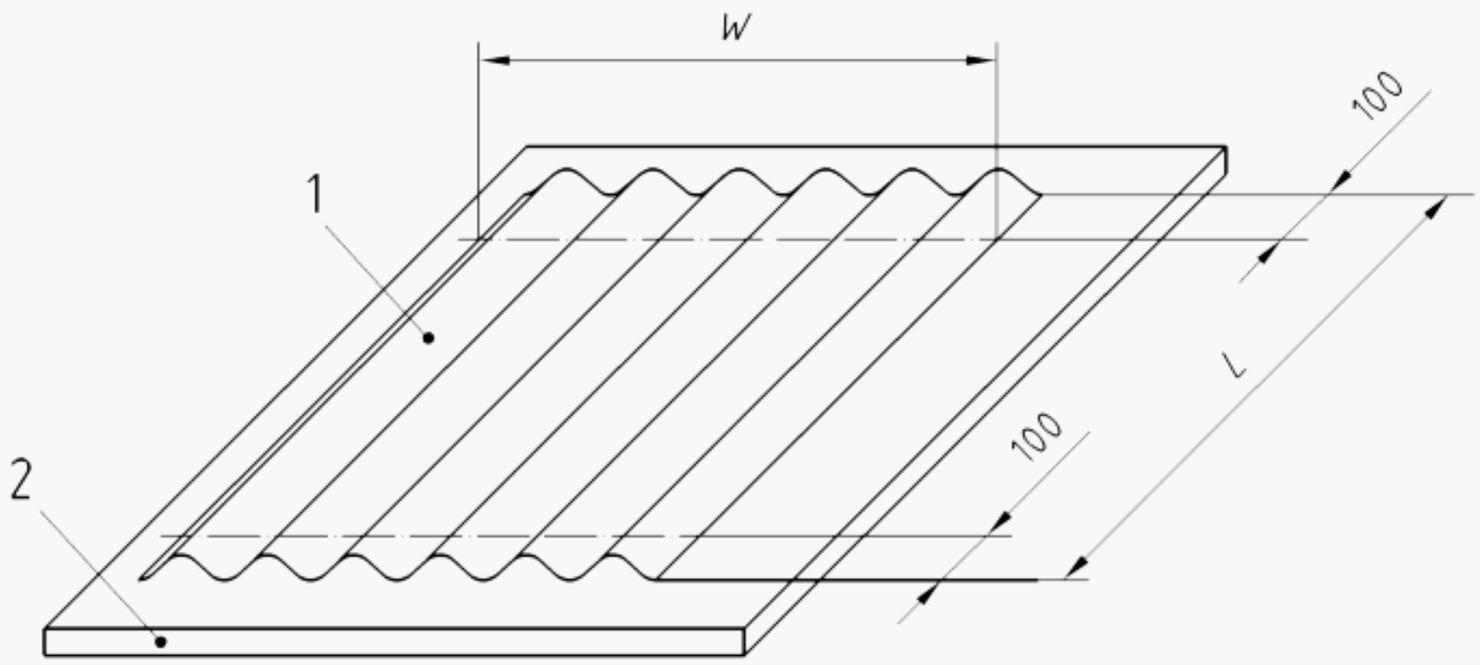

Key

1 test piece

2 stable flat plane

Figure 3 — Length and width measurement

7.1.2 Width

7.1.2.1 Equipment

The test equipment is shown in Figure 3 and consists of a precision ruler with 0,5 mm divisions and a stable flat plane.

7.1.2.2 Procedure

The measurement shall be taken while the sheet is supported on a stable flat plane.

The width shall be measured at a position 100 mm from each end of the sheet.

The test is carried out on 3 different corrugated bitumen sheets.

7.1.2.3 Results

The result is the mean of the three mean values of the two measured values of each corrugated bitumen sheet.

7.1.3 Thickness

7.1.3.1 Equipment

The equipment is shown schematically in Figure 4 and consists of a precision measuring device with 0,1 mm divisions and with flat contact surfaces of minimum 5 mm diameter.

7.1.3.2 Procedure

The measurements shall be taken on the flank of the corrugation or on the flat part, 50 mm from the edge of the sheet. 10 different flanks and/or flat parts positions shall be measured, 5 measurements at each end of the sheet.

Licensed Copy: sheffieldun sheffieldun, na, Mon Nov 06 09:46:29 GMT+00:00 2006, Uncontrolled Copy, (c) BSI

NOTE Cutting of the sheet may be necessary to ensure that the measurement can be taken correctly.

The measurement shall be performed with a maximum pressure of 2 N/cm^2, which guarantees a stable measurement without compression of the surface.

The test is carried out on one corrugated bitumen sheet.

7.1.3.3 Results

The result is the arithmetic mean of the 10 measured values.

The result shall be expressed to the nearest 0,1 mm.

Dimensions in millimetres

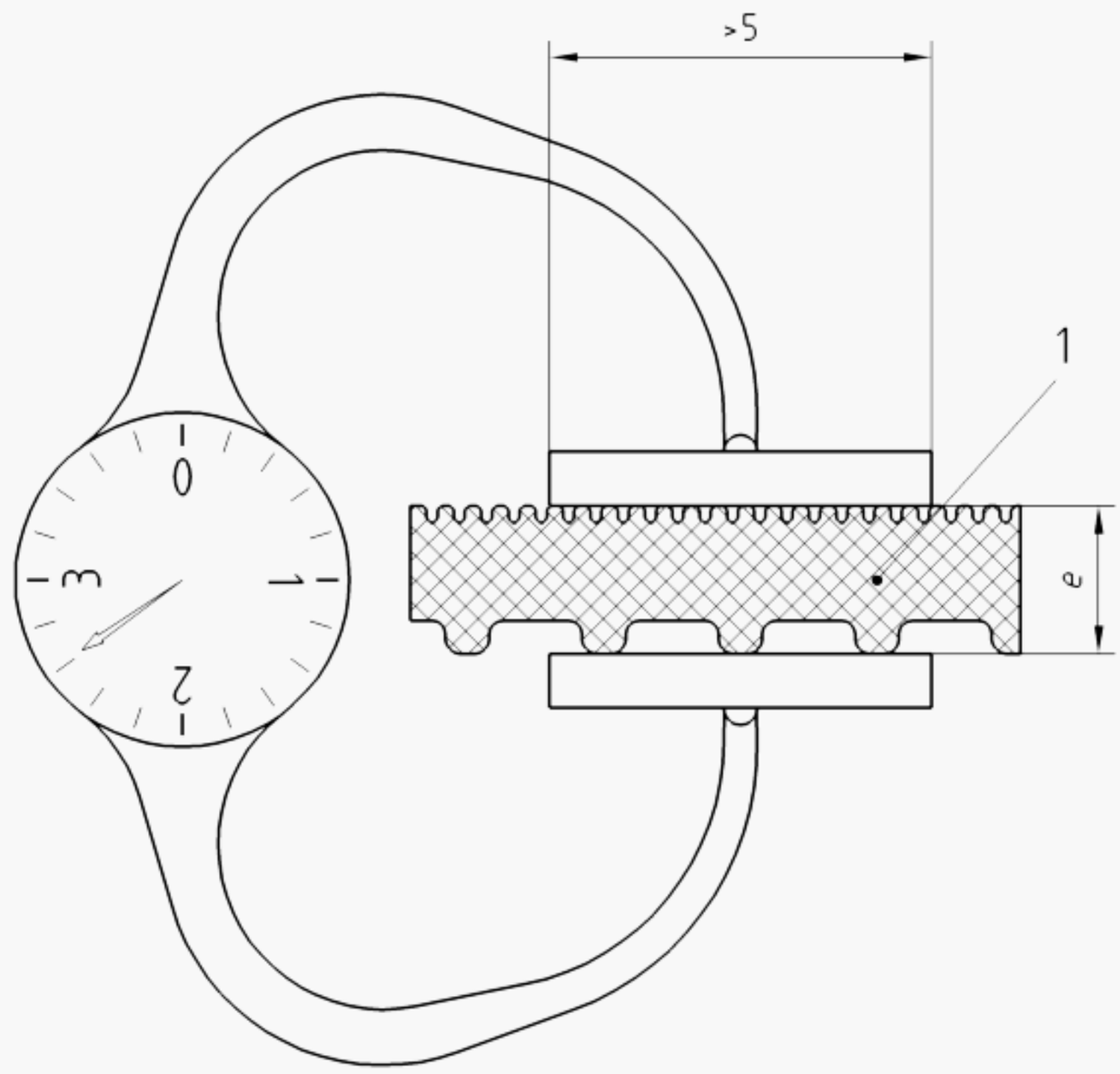

Key

1 test piece

Figure 4 — Thickness measurement

7.1.4 Height of corrugations

7.1.4.1 Equipment

The test equipment is shown in Figure 5 and consists of a precision measuring device with 0,1 mm divisions, a flat bar with a length longer than the corrugation pitch and a stable flat plane.

7.1.4.2 Procedure

The measurement shall be taken while the sheet is supported on a stable flat plane. The zero shall be obtained by measuring the thickness of the flat bar before inserting the sheet.

Licensed Copy: sheffieldun sheffieldun, na, Mon Nov 06 09:46:29 GMT+00:00 2006, Uncontrolled Copy, (c) BSI

The flat bar shall be placed on two adjacent corrugations of the same height. The height of corrugations shall be measured at 50 mm from each end of the sheet.

Four measurements, evenly distributed over the width of the corrugated sheet, leaving out the first and last corrugations, shall be taken.

The test is carried out on one corrugated bitumen sheet.

7.1.4.3 Results

The result is the arithmetic mean of the 8 measured values.

The result shall be expressed to the nearest 0,1 mm.

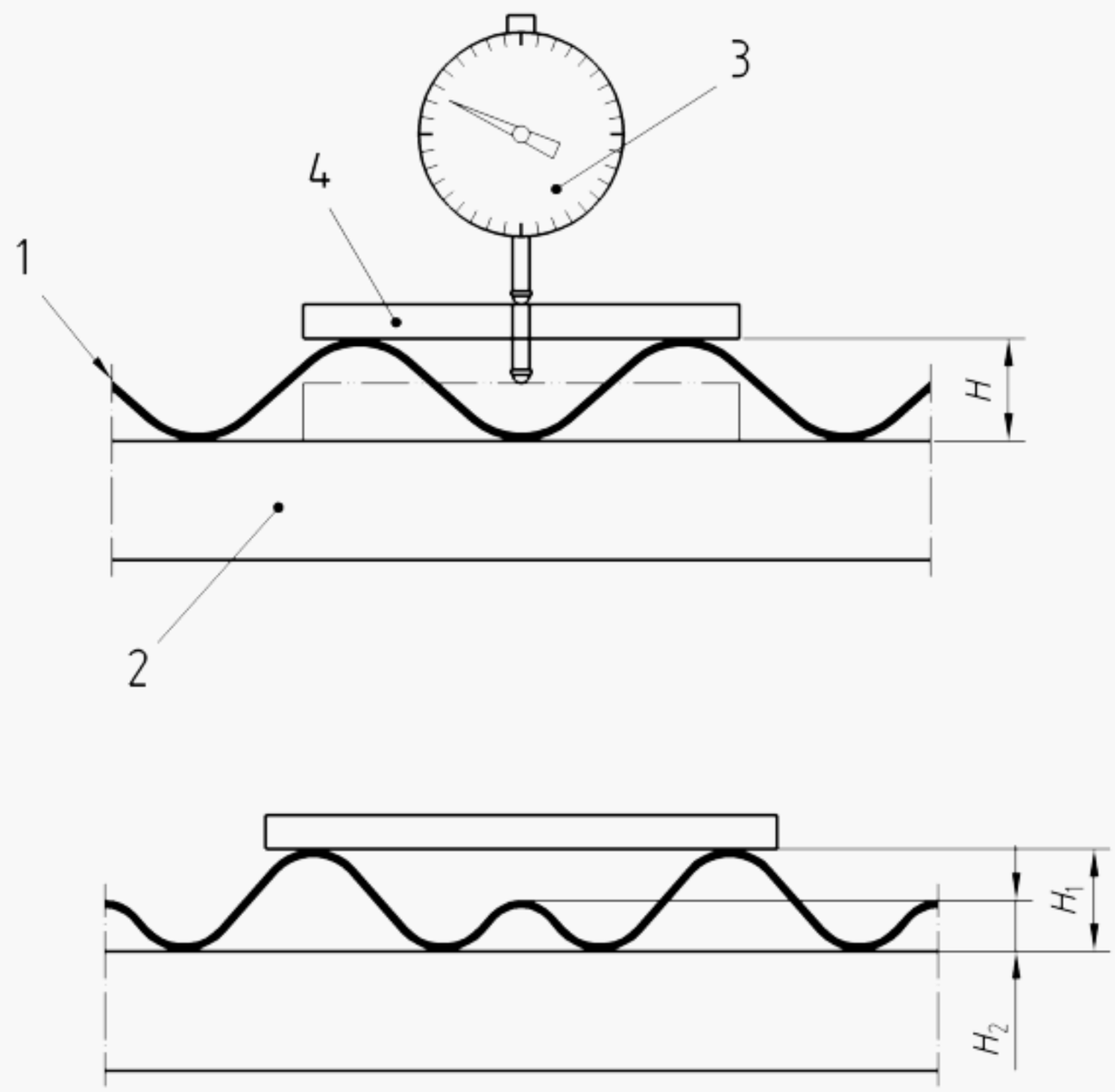

Key

1 test piece
2 stable flat plane
3 measuring device
4 flat bar

Figure 5 — Height of corrugation measurement

7.1.5 Pitch of corrugations

7.1.5.1 Equipment

The equipment is shown in Figure 6 and consists of a precision metal ruler with 0,5 mm divisions, a stable flat plane and a set of at least three iron tubes with the same diameter of 200 mm length (the diameter of the tube shall be such as to touch both flanks of the corrugations).

Licensed Copy: sheffieldun sheffieldun, na, Mon Nov 06 09:46:29 GMT+00:00 2006, Uncontrolled Copy, (c) BSI

Licensed Copy: sheffieldun sheffieldun, na, Mon Nov 06 09:46:29 GMT+00:00 2006, Uncontrolled Copy, (c) BSI

7.1.5.2 Procedure

Before measuring the pitch, the edge shall be free of burrs so that the tube is lying properly on the flanks.

The measurement shall be taken while the sheet is supported on the stable flat plane, ensuring that the valley of every corrugation is in contact with it.

At one end of the sheet, lay the tubes into the valleys of the corrugations with the end slightly out from the end of the sheet. Measure the distance between the tubes to at least the nearest 0,5 mm.

On each side of the sheet, three measurements of the pitch and/or period shall be taken, evenly distributed over the width of the corrugated sheet, leaving out the first and last pitch of corrugation.

The test is carried out on one corrugated bitumen sheet.

7.1.5.3 Results

The result is the arithmetic mean of the six measured values.

The result shall be expressed to at least the nearest 0,5 mm.

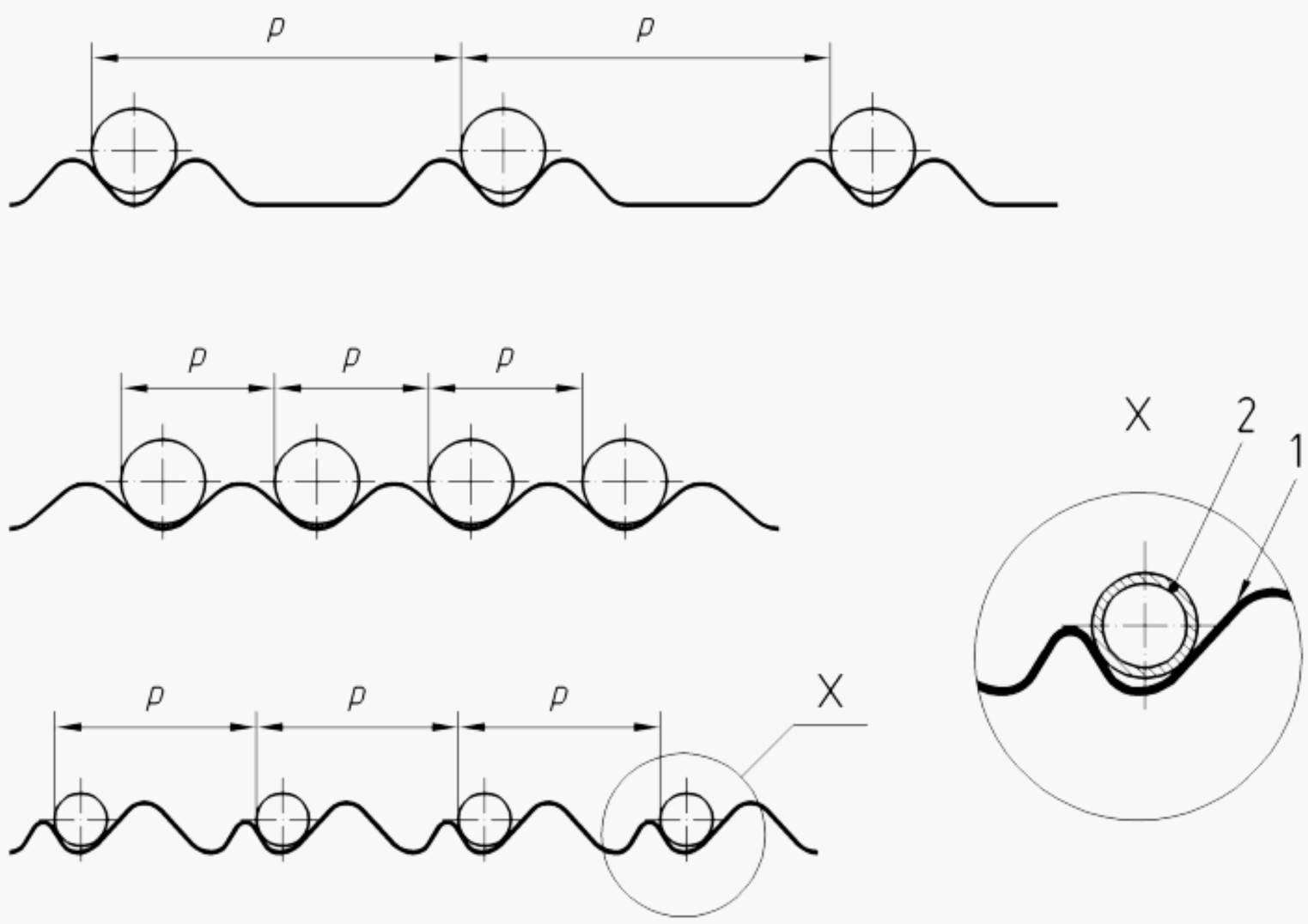

Key

1 test piece
2 metal tube

Figure 6 — Examples of pitch and period of corrugations

7.1.6 Squareness

7.1.6.1 Equipment

The equipment is shown in Figure 7 and consists of a stable flat plane exactly cut with 90° angle and with a square edge on the bottom, one tube with a length 5 % longer than the length of the corrugated bitumen sheet

and a diameter such that it touches both flanks of the corrugations, and a precision metal ruler with 0,5 mm divisions.

7.1.6.2 Procedure

The corrugated bitumen sheet shall be put on a stable flat plane, so that the corrugated end of the sheet is resting on the square edge at the end of the plane. The tube shall be put in the middle of the corrugated bitumen sheet centrally into a valley of the corrugation.

The distances x_1 and x_2, from the side of the tube to the edge of the stable flat plane shall be measured (Figure 7).

The distance Lx is then measured between x_1 and x_2.

After this the corrugated bitumen sheet shall be turned around so that the other corrugated end of the sheet is resting against the square edge. The same measurements as before shall be taken.

The test is carried out on one corrugated bitumen sheet.

7.1.6.3 Result

The squareness E is calculated as:

$$E = \left| (x_1 - x_2) \right| / Lx \text{ [mm/m]}$$

The result is the arithmetic mean of the two calculated values.

Licensed Copy: sheffieldun sheffieldun, na, Mon Nov 06 09:46:29 GMT+00:00 2006, Uncontrolled Copy, (c) BSI

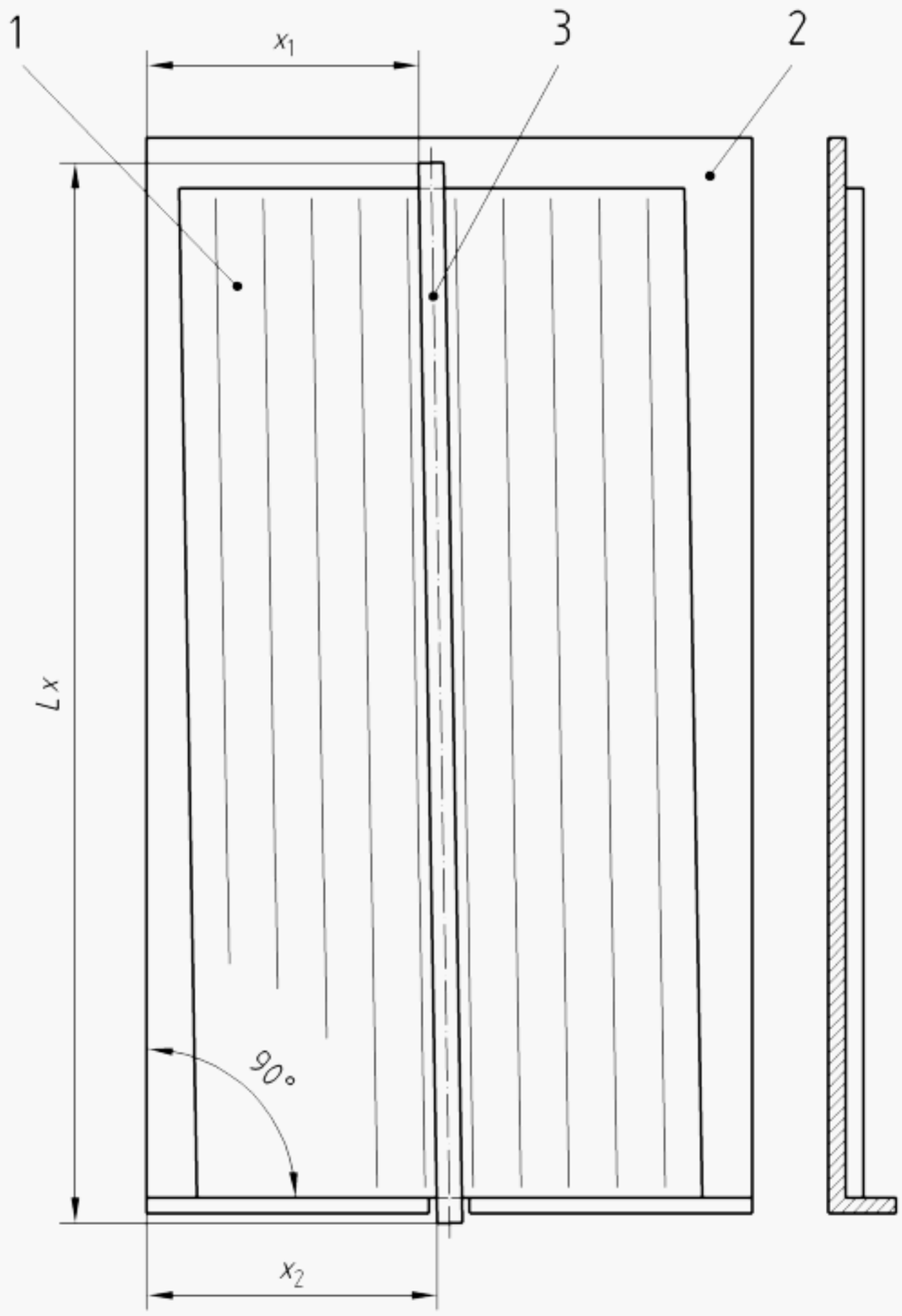

The result is expressed to the nearest 1 mm.

Key

1 test piece
2 stable flat plane
3 tube

Figure 7 — Squareness measurement

Licensed Copy: sheffieldun sheffieldun, na, Mon Nov 06 09:46:29 GMT+00:00 2006, Uncontrolled Copy, (c) BSI

Licensed Copy: sheffieldun sheffieldun, na, Mon Nov 06 09:46:29 GMT+00:00 2006, Uncontrolled Copy, (c) BSI

7.2 Mechanical properties

7.2.1 Bending under downward load

7.2.1.1 Equipment

The equipment is shown in Figure 8. It consists of:

— strong horizontal bench larger than the corrugated bitumen sheet;

— four square tubes MSH 60 / 60 / 5 mm with a minimum length 10 % longer than the width of the sheet;

— six channels 40 / 35 / 5 mm, with a length 10 % longer than the width of the sheet;

— three supports;

— three square bars 20 / 20 mm x 40 mm;

— I-beam HEA 140 x 1 500 mm;

— hydraulic or electro-mechanical cylinder capable of supplying a force of 10 kN;

— force receiver, mounted between I-beam and the cylinder;

— one electronic elongation device accurate to 0,01 mm with a fixed disk of 20 mm on the top;

— precision metal ruler with 0,5 mm divisions.

7.2.1.2 Procedure

7.2.1.2.1 Set up

With reference to Figure 8, the four square tubes are placed on the bench, adjusted to the span of 620 mm and properly fixed to the bench. The corrugated bitumen sheet is placed on the square tubes and adjusted centrally under the cylinder. In the case of an irregular profile, the nearest bottom of a corrugation is always at the centre of the cylinder.

The six channels with the three supports are placed loose on the sheet and adjusted. In the middle of each support a square bar is placed as a joint for the I-beam.

The total mass of the preload shall be equal to (60 ± 5) kg.

The elongation device is mounted rigid and vertical underneath the test piece. The position shall be exactly in the middle between the two square tubes and at the bottom of a corrugation directly central under the cylinder.

After applying the six channels, three supports, I-beam, the force receiver and the elongation device, ensure that there is no gap between the corrugated bitumen sheet and the two central square tubes. If a gap exists, the corrugated bitumen sheet is not suitable for this test and shall be changed.

Once this check has been made, the electronic elongation device is set to zero.

Licensed Copy: sheffieldun sheffieldun, na, Mon Nov 06 09:46:29 GMT+00:00 2006, Uncontrolled Copy, (c) BSI

7.2.1.2.2 Area of the load

The width w of the corrugated bitumen sheet is measured before the test according to 7.1.2. The length shall be three times the distance between the square tubes, i.e. 3 x 620 mm = 1 860 mm.

The area over which the load is distributed shall be calculated as:

load area = w x 1 860 / 1 x 10^6 [m^2]

All dimensions are in millimetres

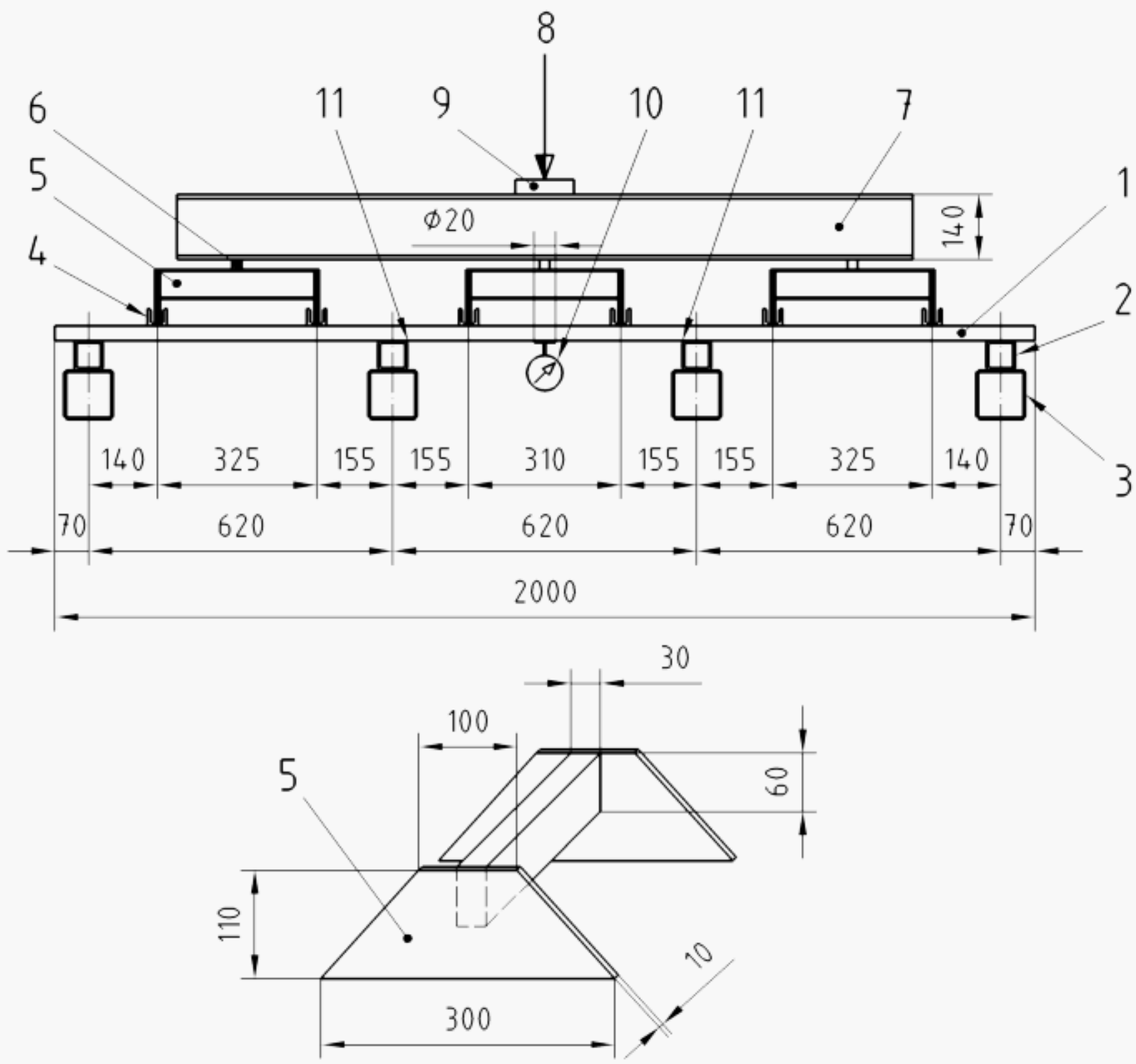

Key

1	test piece	5	three supports	9	force receiver
2	four square tubes	6	three square bars	10	elongation device
3	horizontal bench	7	I-beam	11	check
4	six channels	8	cylinder		

Figure 8 — Bending under downward load

7.2.1.2.3 Test execution

The speed of the cylinder shall be between 1 to 3 mm/min.

Force and elongation shall be recorded simultaneously, until the deflection is greater than 4,0 mm.

The test is carried out on five different corrugated bitumen sheets.

7.2.1.3 Results

Five graphs (one for each sheet) giving deflection as a function of force shall be produced. The force at an elongation of 3,1 mm shall be read off these graphs. The uniform load for each sheet shall be calculated using:

uniform load = force / load area [N/m^2]

The result is the arithmetic mean of the five corrugated bitumen sheets, expressed to the nearest 10 N/m^2.

7.2.2 Impact strength

7.2.2.1 Equipment

The equipment is shown in Figure 9 and comprises:

— strong horizontal bench with a minimum height of 700 mm;

— four supports made of a metal square tube profile MSH 60 / 60 / 5 mm;

— four supports made of wood 60 / 60 mm;

— eight clamps;

— sphero-conical bag (ISO 7892) filled with sand having a total mass of 40 kg;

— release hook.

7.2.2.2 Procedure

The corrugated bitumen sheet shall be laid on the construction and fixed by the four wooden supports, using clamps or screws without compressing the height of the sheet.

The sack shall be positioned to have a height of fall between the bottom of the sack and the crown of the corrugations, at mid-point between two supports and at the centre of the sheet, depending on the category.

The sack shall be released without any initial momentum.

The test is carried out on five different corrugated bitumen sheets.

7.2.2.3 Results

The sheet shall resist the impact of the bag. The test is deemed to have failed if the sack passes completely through the sheet.

For the test to be passed, all five corrugated bitumen sheet shall pass.

Licensed Copy: sheffieldun sheffieldun, na, Mon Nov 06 09:46:29 GMT+00:00 2006, Uncontrolled Copy, (c) BSI

All dimensions are in millimetres

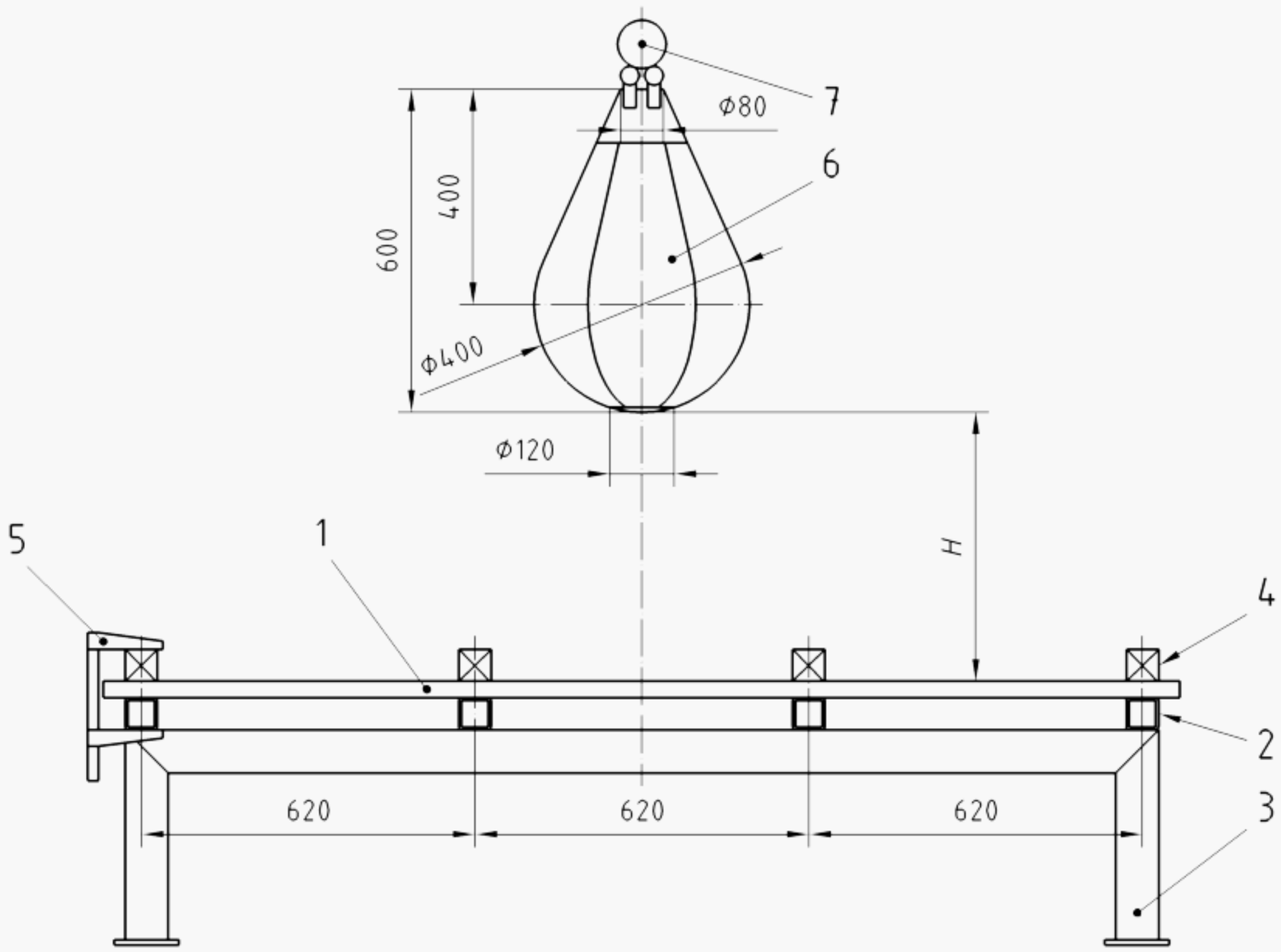

Key

1	test piece	5	eight clamps
2	four metal support	6	sphero-conical bag
3	horizontal bench	7	release hook
4	four wooden supports	H	height of fall

Figure 9 — Impact strength test

7.2.3 Tearing strength

7.2.3.1 Equipment

The test equipment is shown in Figure 10 and consists of:

— tensile machine with a speed of 50 mm/min;

— counter plate with a hole of 50 mm in the centre;

— two clamps, to prevent the test piece from moving;

— spacer to prevent the test piece from moving;

— steel disk with a diameter of 13 mm and a thickness of 6 mm minimum;

— one nail with a diameter of 3 mm.

Licensed Copy: sheffieldun sheffieldun, na, Mon Nov 06 09:46:29 GMT+00:00 2006, Uncontrolled Copy, (c) BSI

Licensed Copy: sheffieldun sheffieldun, na, Mon Nov 06 09:46:29 GMT+00:00 2006, Uncontrolled Copy, (c) BSI

7.2.3.2 Procedure

A 3 mm hole is drilled in the middle of the central corrugation of the test piece.

The nail is placed in the middle of the central corrugation with the disk resting on the crown of the corrugation. The shank of the nail is fixed in the jaw of the tensile machine.

The maximum force required to pull the disk through the test piece shall be measured.

The test is carried out on five different sheets.

If a manufacturer declares that a certain corrugation has to be nailed, only that corrugation on each sheet shall be tested.

7.2.3.3 Results

The result is the arithmetic mean of the five measurements, expressed to the nearest Newton.

All dimensions are in millimetres

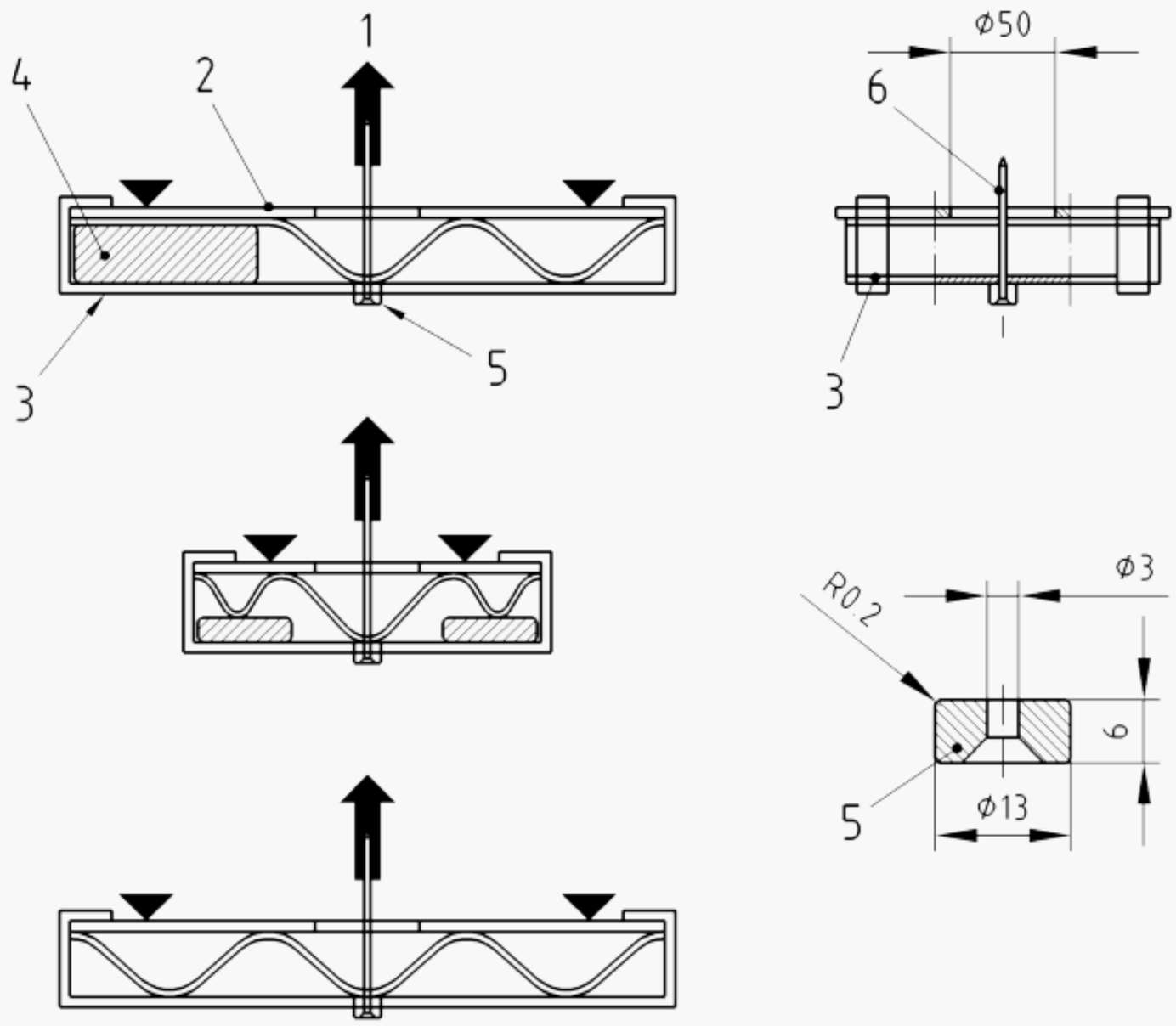

Key

1 tensile machine
2 counter plate
3 two clamps
4 spacer
5 disk
6 nail

Figure 10 — Tearing strength test

Licensed Copy: sheffieldun sheffieldun, na, Mon Nov 06 09:46:29 GMT+00:00 2006, Uncontrolled Copy, (c) BSI

7.3 Physical properties

7.3.1 Water impermeability

7.3.1.1 Equipment

The equipment is shown in Figure 11 and comprises a frame adapted to the test piece and a seal. Demineralised water is also used.

7.3.1.2 Procedure

The frame shall be placed around the test piece and the edges between test piece and the wall of the frame shall be sealed watertight.

Demineralised water shall be poured into this container to a height of 100 mm above the crown of the corrugation. The temperature of the water shall be (23 ± 2) °C.

The resulting test specimen shall be left for (48 ± 2) h in laboratory conditions, temperature (23 ± 3) °C, after which the underside of the test piece shall be examined to see if there is any water penetration.

The test is carried out on one sample.

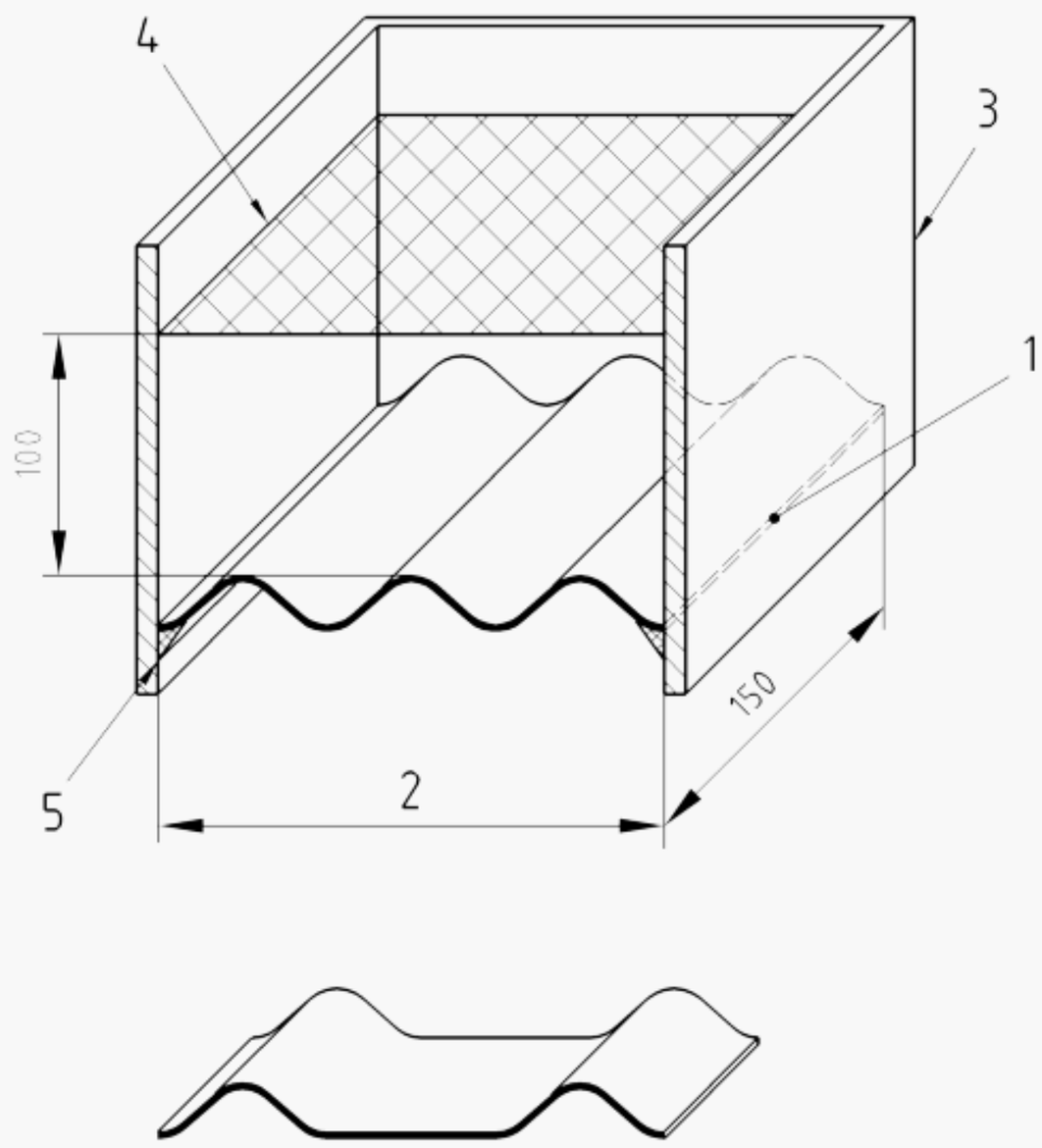

NOTE Three corrugations when the product includes a flat area.

Key

1 test piece
2 three corrugations
3 frame
4 demineralised water
5 seal

Figure 11 — Water impermeability test

Licensed Copy: sheffieldun sheffieldun, na, Mon Nov 06 2006, 09:46:29 GMT+00:00 2006, Uncontrolled Copy, (c) BSI

7.3.1.3 Results

The test shall be judged to have passed or failed using visual assessment.

7.3.2 Proportion of bitumen

7.3.2.1 Equipment

The equipment necessary consists of a bitumen extractor apparatus (e.g. Kumagawa or Soxhlet) and a drying cabinet. Methylene chloride, Trichloroethylene or Toluene are also required.

7.3.2.2 Procedure

The test pieces shall be put into the drying cabinet at least for 48 h at 70 °C. The test pieces are then weighed to the nearest 0,01 g, this being the mass before extraction.

The test pieces shall then be placed into the hot extraction apparatus, and extraction shall continue until the solvent remains clear.

The test pieces shall then be removed and the solvent allowed to evaporate under a ventilated hood.

When the solvent has evaporated, the test pieces are put into the drying cabinet for at least for 12 h at 105 °C. The test pieces are then weighed to the nearest 0,01 g, this being the mass after extraction.

The test is carried out on three different samples.

7.3.2.3 Results

The bitumen content is calculated using:

content = [(mass before extraction – mass after extraction) / mass before extraction] x 100 [%].

The test is passed when all three tested samples meet the requirement.

7.3.3 Mass

7.3.3.1 Equipment

The equipment consists of a balance with a precision of ± 10 g.

7.3.3.2 Procedure

The total mass of each corrugated bitumen sheet shall be divided by the length (7.1.1) and width (7.1.2) of the sheet.

The test is carried out on five different corrugated bitumen sheets.

7.3.3.3 Results

The result shall be the arithmetic mean of all five tested corrugated bitumen sheets, expressed to the nearest 0,02 kg/m^2.

Licensed Copy: sheffieldun sheffieldun, na, Mon Nov 06 09:46:29 GMT+00:00 2006, Uncontrolled Copy, (c) BSI

7.3.4 Homogeneity of the product

7.3.4.1 Equipment

The equipment consists of a cutter.

7.3.4.2 Procedure

Each test piece shall be peeled by hand (or with the help of a cutter) so as to reveal the largest possible torn surface (see Figure 12).

Each surface shall be checked to see if there is any area without bitumen larger than 1 cm^2.

The test is carried out on twelve samples.

7.3.4.3 Results

The test is passed if, for all twelve samples, no surface contains any area without bitumen larger than 1 cm^2.

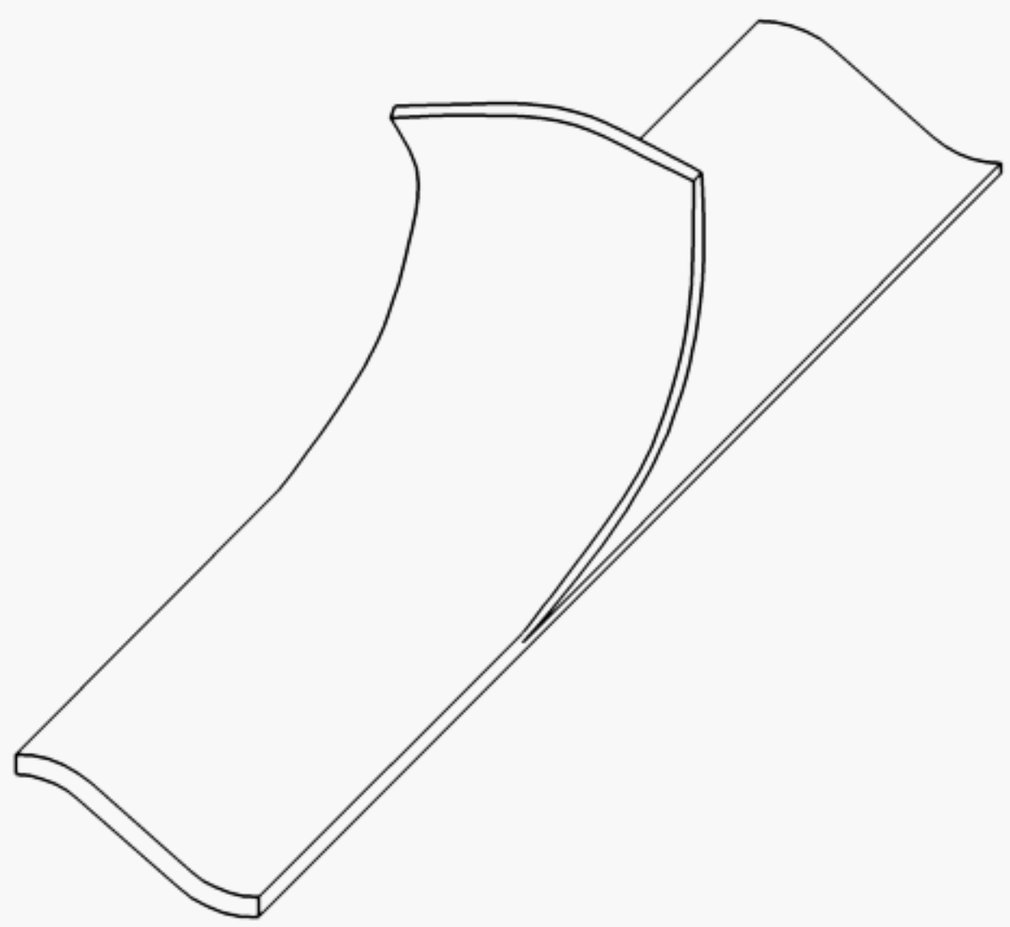

Figure 12 — Homogeneity of the product

7.3.5 Water absorption

7.3.5.1 Equipment

The equipment consists of a water bath, a drying cabinet and a balance. Demineralised water is also required.

7.3.5.2 Procedure

The test pieces shall be put into the drying cabinet for at least 48 h at 70 °C until their mass becomes constant. The test pieces are then weighed to the nearest 0,01 g, this being the mass before absorption.

The test pieces shall then be placed horizontally in a container of demineralised water, without protection of the cut surfaces. The temperature of the water shall be (23 ± 2) °C and its level shall be 100 mm above the crown of the corrugations. The test pieces shall not touch each other.

After (24 ± 1) h, the test pieces shall be removed from the water and their surfaces wiped to remove any drops of water. The test pieces are then weighed to the nearest 0,01 g, this being the mass after absorption.

The test is carried out on three samples.

7.3.5.3 Results

The water absorption is calculated using:

absorption = [(mass after absorption – mass before absorption)/mass before absorption] x 100 [%].

The test is passed when all three tested samples meet the requirement.

7.4 Durability

7.4.1 Tearing strength after freeze/thaw ageing

7.4.1.1 Procedure

First the frost resistance conditioning procedure (7.4.4) shall be performed on each test piece. After the last cycle, the test pieces shall be stored for 24 h at laboratory conditions and then the tearing strength test (7.2.3) shall be performed.

The test is carried out on five samples.

7.4.1.2 Results

The result is the mean of the five measurements, expressed to the nearest Newton.

7.4.2 Water impermeability after freeze/thaw ageing

7.4.2.1 Procedure

First the frost resistance conditioning procedure (7.4.4) shall be performed on the test piece. After the last cycle, the test pieces shall be stored for at least 24 h at laboratory conditions and then the water impermeability test (7.3.1) shall be performed. After (48 ± 2) h the underside of the test piece shall be examined to see if there is any water penetration.

The test is carried out on one sample.

7.4.2.2 Results

The test shall be judged to have been passed or failed using visual assessment.

7.4.3 Thermal coefficient

7.4.3.1 Equipment

The equipment consists of two small needles, a heating chamber and a slide gauge.

7.4.3.2 Procedure

The two needles shall be affixed on the side of the test piece 200 mm apart. The distance between the needles shall be measured with the slide gauge to an accuracy of ± 0,1 mm.

Licensed Copy: sheffieldun sheffieldun, na, Mon Nov 06 09:46:29 GMT+00:00 2006, Uncontrolled Copy, (c) BSI

Licensed Copy: sheffieldun sheffieldun, na, Mon Nov 06 09:46:29 GMT+00:00 2006, Uncontrolled Copy, (c) BSI

The test piece shall then be placed in the heating chamber, heated to (73 ± 2) °C and maintained at this temperature for (4 ± 1) h. The test piece shall then be taken out and the distance between the two needles shall be measured immediately with the slide gauge.

The test is carried out on two samples.

7.4.3.3 Results

The thermal coefficient α shall be calculated using:

α = (length after heating – length before heating) / (length before heating x ΔT) [1/K].

The result is the mean of the two measurements, expressed in 10^{-6} 1/K.

7.4.4 Frost resistance conditioning

7.4.4.1 Equipment

The equipment consists of a water bath, a ventilated oven capable of maintaining +50 °C and a freezer capable of maintaining –20 °C. Demineralised water is also used.

7.4.4.2 Procedure

7.4.4.2.1 Absorption

The test pieces are placed horizontally in a container of demineralised water, without protection of the cut surfaces. The temperature of the water shall be (23 ± 2) °C and the water level shall be 100 mm above the crown of the corrugations. The test pieces shall not touch each other.

The test piece shall be removed from the water without wiping the water from the surface.

7.4.4.2.2 Freezing

The test piece shall be put immediately from the water bath into the freezer at –20 °C.

7.4.4.2.3 Thawing

The test piece shall be put immediately from the freezer into a ventilated oven at +50 °C.

7.4.4.2.4 Test cycles

The test piece shall be subject to the following cycles:

— Step 1 : absorption for (24 ± 1) h;

— Step 2 : cycle of:

- freezing (16 ± 1) h;
- thawing (4 ± 0,5) h;
- absorption (4 ± 0,5) h.

Repeat this cycle 22 times.

— Step 3 : last cycle:

- (16 ± 1) h freezing;
- (72 ± 2) h thawing.

In case of interruption of this test, the cycle may only be stopped during the freezing cycle, in which case the test piece shall be left in the freezer.

NOTE This procedure is used only as conditioning for the tests in 7.4.1 and 7.4.2.

7.5 Fire performance

7.5.1 Reaction to fire

Where required, the reaction to fire of corrugated bitumen sheets shall be tested and classified in accordance with the provisions of EN 13501-1. Where a specific test method requires it, products shall be mounted and fixed in the test apparatus in a manner representative of the product's intended end use conditions.

7.5.2 External fire performance

Where required, the external fire performance of corrugated bitumen sheets shall be tested according to one or more of the methods described in ENV 1187 and shall be classified in accordance with the provisions of EN 13501-5. Products shall be mounted and fixed in the test apparatus in a manner representative of the product's intended end use conditions.

8 Evaluation of conformity

8.1 General

The compliance of corrugated bitumen sheets with the requirements of this standard and with the stated values shall be demonstrated by:

— initial type testing;

— factory production control by the manufacturer, including product assessment.

For the purposes of testing, corrugated bitumen sheets may be grouped into families where it is considered that the results for a given characteristic from any one product in a family are representative for all other products within that family.

NOTE Products may be grouped into different families depending on the characteristic.

8.2 Initial type testing

Initial type testing shall be performed to demonstrate conformity to this standard. Tests previously performed in accordance with the provisions of this standard (same product, same characteristic(s), test method, sampling procedure, system of attestation of conformity, etc.) may be taken into account. In addition, initial type testing shall be performed at the beginning of the production of a new corrugated bitumen sheets type (unless a member of the same family) or at the beginning of a new method of production (where this may affect the stated properties).

Products for initial type testing shall be sampled and conditioned in accordance with Clause 6.

Licensed Copy: sheffieldun sheffieldun, na, Mon Nov 06 09:46:29 GMT+00:00 2006, Uncontrolled Copy, (c) BSI

Licensed Copy: sheffieldun sheffieldun, na, Mon Nov 06 09:46:29 GMT+00:00 2006, Uncontrolled Copy, (c) BSI

The results of all type tests shall be recorded and held by the manufacturer for at least 10 years after the last date of production of the products to which they refer.

Whenever a change occurs in the corrugated bitumen sheets design, the raw material of supplier of the components, or the production process (subject to the definition of a family), which would change significantly one or more of the characteristics, the type tests shall be repeated for the appropriate characteristic(s).

8.3 Factory production control (FPC)

8.3.1 General

The manufacturer shall establish, document and maintain an FPC system to ensure that the products placed on the market conform to the stated performance characteristics. The FPC system shall consist of procedures, regular inspections and tests and/or assessments and the use of the results to control raw and other incoming materials or components, equipment, the production process and the product.

An FPC system conforming to the requirements of EN ISO 9001, and made specific to the requirements of this standard, is considered to satisfy the above requirements.

The results of inspections, tests or assessments requiring action shall be recorded, as shall any action taken. The action to be taken when control values or criteria are not met shall be recorded.

8.3.2 Equipment

All weighing, measuring and testing equipment shall be calibrated and regularly inspected according to documented procedures, frequencies and criteria.

8.3.3 Raw materials and components

The specifications of all incoming raw materials and components shall be documented, as shall the inspection scheme for ensuring their conformity.

8.3.4 Non-conforming products

In the event of any non-conformity of any product, that product shall be placed into quarantine and action taken to rectify the cause of the non-conformity. Products may not subsequently be dispatched until the problem has been resolved.

8.3.5 Frequency of testing

The minimum frequency of testing for factory production control is shown in Table A.1.

8.3.6 Tests methods

For factory production control, indirect methods may be used instead of the method described in this standard if a statistical correlation for the product in question can be established.

9 Marking

The packaging and/or accompanying commercial documents of corrugated bitumen sheets shall contain the following information:

a) product trade mark or other symbol used for product recognition;

b) number of this standard (EN 534);

c) nominal length and width of the corrugated bitumen sheets;

d) pitch and/or period of corrugation;

e) height of corrugation;

f) corrugations used for fixing (if relevant).

A minimum of 40 % of the corrugated bitumen sheets in each delivered unit shall be durably marked at least with the date of manufacture (day, month, year or special code).

Where ZA.3 covers the same information as required by the clause, the requirements of this clause are met.

Licensed Copy: sheffieldun sheffieldun, na, Mon Nov 06 09:46:29 GMT+00:00 2006, Uncontrolled Copy, (c) BSI

Licensed Copy: sheffieldun sheffieldun, na, Mon Nov 06 09:46:29 GMT+00:00 2006, Uncontrolled Copy, (c) BSI

Annex A
(normative)

Frequencies of testing for factory production control

The minimum frequencies of testing for factory production quality control are given in Table A.1.

Table A.1 — Minimum frequencies for factory production control testing

		Frequency of FPC (production time)
7.1	**Geometrical properties**	
7.1.1	Length	24 h
7.1.2	Width	24 h
7.1.3	Thickness	week
7.1.4	Height of corrugation	week
7.1.5	Pitch of corrugation	week
7.1.6	Squareness	week
7.2	**Mechanical properties**	
7.2.1	Bending under downward load	year
7.2.2	Impact strength	year
7.2.3	Tearing strength	year
7.3	**Physical properties**	
7.3.1	Water impermeability	half year
7.3.2	Proportion of bitumen	8 h
7.3.3	Mass	8 h
7.3.4	Homogeneity of the product	week
7.3.5	Water absorption	month
7.4	**Durability**	
7.4.1	Tearing strength after freeze/thaw ageing	a)
7.4.2	Water impermeability after freeze/thaw ageing	a)
7.4.3	Thermal coefficient	a)
7.5	**Fire performance**	
7.5.1	Reaction to fire	a)
7.5.2	External fire performance	a)
a) For durability and fire performance, no direct testing is required for FPC purposes. The composition of the product shall, however, be kept within specifications defined in the manufacturer's FPC documentation such that the results of initial type testing remain valid.		

Annex ZA
(informative)

Clause of this European Standard addressing the provisions of the EU Construction Products Directive (89/106/EEC)

ZA.1 Scope and relevant clauses

This European Standard has been prepared under the Mandates M/121 "Internal and external wall and ceiling finishes" and M/122 "Roof coverings, rooflights, roof windows and ancillary products" given to CEN by the European Commission and the European Free Trade Association.

The clauses of this European Standard shown in this Annex meet the requirements of the mandates given under the EU Construction Products Directive (89/106/EEC).

Compliance with these clauses confers the presumption of fitness of the construction products covered by this European Standard for their intended use, reference shall be made to the information accompanying the CE marking symbol.

WARNING — Other requirements and EU directives, not affecting the fitness for intended use, may be applicable to a construction product falling within the scope of this standard.

NOTE 1 In addition to any specific clauses relating to dangerous substances contained in this standard, there may be other requirements applicable to the products falling within its scope (e.g. transposed European legislation and national laws, regulations and administrative provisions). In order to meet the provisions of the EU Construction Products Directive, these requirements need also to be complied with, when and where they apply.

NOTE 2 An informative database of European and national provisions on dangerous substances is available at the Construction web site on EUROPA (accessed *through http://europa.eu.int/comm/enterprise/construction/internal/dangsub.htm).*

This Annex establishes the conditions for the CE marking of corrugated bitumen sheets intended for the uses indicated in Tables ZA.1.1 and ZA.1.2 and the relevant clauses applicable.

This Annex ZA has the same scope as Clause 1 of this standard.

Licensed Copy: sheffieldun sheffieldun, na, Mon Nov 06 09:46:29 GMT+00:00 2006, Uncontrolled Copy, (c) BSI

Licensed Copy: sheffieldun sheffieldun, na, Mon Nov 06 09:46:29 GMT+00:00 2006, Uncontrolled Copy, (c) BSI

Table ZA1.1 — Relevant clauses for corrugated bitumen sheets for roofs

Product: Corrugated bitumen sheets **Intended use:** Discontinuously laid roof coverings for buildings			
Essential characteristics	**Requirement clauses in this European Standard**	**Levels and classes**	**Notes**
Bending under downward load	5.2.1	–	Threshold value : R ≥ 1400 N/m^2 S > 700 N/m^2
Impact strength	5.2.2	–	Threshold value : R = 400 mm, S = 250 mm
Tearing strength	5.2.3	–	Threshold value : R = 200 N, S = 150 N
Water impermeability	5.3.1	-	Pass/fail
Tearing strength after freeze/thaw ageing	5.4.1	–	Threshold value : R = 200 N, S = 150 N
Water impermeability after freeze/thaw ageing	5.4.2	-	Pass/fail
Thermal coefficient	5.4.3	-	Threshold value : $\alpha < 100 \cdot 10^{-6}$ 1/K
Reaction to fire	5.5.1	See EN 13501-1	
External fire performance	5.5.2	See EN 13501-5	

Table ZA.1.2 — Relevant clauses for corrugated bitumen sheets for external walls

Product: Corrugated bitumen sheets **Intended use:** Discontinuously laid external wall finishes for buildings			
Essential Characteristics	**Requirement clauses in this European Standard**	**Levels and classes**	**Notes**
Tearing strength	5.2.3	–	Threshold value : R = 200 N, S = 150 N
Water impermeability	5.3.1	-	Pass/fail
Tearing strength after freeze/thaw ageing	5.4.1	–	Threshold value : R = 200 N, S = 150 N
Water impermeability after freeze/thaw ageing	5.4.2	-	Pass/fail
Reaction to fire	5.5.1	See EN 13501-1	

Licensed Copy: sheffieldun sheffieldun, na, Mon Nov 06 09:46:29 GMT+00:00 2006, Uncontrolled Copy, (c) BSI

The requirement on a certain characteristic is not applicable in those Member States (MSs) where there are no regulatory requirements on that characteristic for the intended use of the product. In this case, manufacturers placing their products on the market of these MSs are not obliged to determine nor declare the performance of their products with regard to this characteristic and the option “No performance determined” (NPD) in the information accompanying the CE marking (see ZA.3) may be used. The NPD option may not be used, however, where the characteristic is subject to a threshold level.

ZA.2 Procedure for the attestation of conformity of corrugated bitumen sheets

ZA.2.1 Systems of attestation of conformity

The systems of attestation of conformity for corrugated bitumen sheets indicated in Tables ZA.1.1 and ZA.1.2, in accordance with the decisions of the Commission of 98/436/EC and 98/437/EC, as given in Annex 3 of the mandates, are shown in Table ZA.2 for the indicated intended use(s) and relevant classes.

Table ZA.2 — Attestation of conformity systems for corrugated bitumen sheets

Product	Intended use	Classes (reaction to fire)	Attestation of conformity systems
Corrugated bitumen sheets	For uses subject to reaction to fire regulations	A1*, A2*, B*, C*	1
		A1**, A2**,B**, C**, D, E,	3
		F	4
	For uses subject to external fire performance regulations[a]	See EN 13501-5	3
	For uses subject to regulations in dangerous substances	-	3
	For uses other than specified above	-	4

System 1: See CPD Annex III.2 (i), without audit-testing of samples.

System 3: See CPD Annex III.2.(ii), Second possibility.

System 4: See CPD Annex III.2.(ii), Third possibility.

a Does not apply to external wall finishing products.

* Products/materials for which a clearly identifiable stage in the production process results in an improvement of the reaction to fire classification (e.g. an addition of fire retardants or a limiting of organic material).

** Products/materials not covered by footnote (*).

The attestation of conformity of the corrugated bitumen sheets in Tables ZA.1.1 and/or ZA.1.2 shall be according to the evaluation of conformity procedures indicated in Tables ZA.3.1 to ZA.3.3 resulting from application of the clauses of this European Standard indicated therein.

Licensed Copy: sheffieldun sheffieldun, na, Mon Nov 06 09:46:29 GMT+00:00 2006, Uncontrolled Copy, (c) BSI

Table ZA.3.1 – Assignment of evaluation of conformity tasks under system 1

Tasks		Content of the task	Evaluation of conformity clauses to apply
Tasks under the responsibility of the manufacturer	Factory production control (FPC)	Parameters related to characteristics of Tables ZA.1.1 and/or ZA.1.2 relevant for the intended use	8.3
	Initial type testing by a notified test lab	External fire performance[a] and release of dangerous substances	8.2
	Initial type testing	Characteristics of Tables ZA.1.1 and/or ZA.1.2 except reaction to fire, external fire performance and release of dangerous substances relevant for the intended use	8.2
Tasks under the responsibility of the product certification body	Initial type testing	Reaction to fire Classes (A1, A2, B, C) *	8.2
	Initial inspection of factory and of F.P.C	Parameters related to characteristics of Tables ZA.1.1 and/or ZA.1.2, in particular reaction to fire relevant for the intended use	8.3
	Continuous surveillance, assessment and approval of F.P.C	Parameters related to characteristics of Tables ZA.1.1 and ZA.1.2, in particular reaction to fire relevant for the intended use	8.3

[a] Applies to roofing products only.

*) See footnote in Table ZA.2.

Table ZA.3.2 – Assignment of evaluation of conformity tasks under system 3

Tasks		Content of the task	Evaluation of conformity clauses to apply
Tasks under the responsibility of the manufacturer	Factory production control (F.P.C)	Parameters related to characteristics of Tables ZA.1.1 and/or ZA.1.2 relevant for the intended use	8.3
	Initial type testing by the manufacturer	Characteristics of Tables ZA.1.1 and/or ZA.1.2 except external fire performance[a], reaction to fire Classes A1**, A2**, B**, C**, D and E, and release of dangerous substances relevant for the intended use	8.3
	Initial type testing by a notified test lab	External fire performance[a], reaction to fire Classes A1**, A2**, B**, C**, D and E, and release of dangerous substances	8.2

[a] Applies to roofing products only.

**) See footnote in Table ZA.2.

Table ZA.3.3 – Assignment of evaluation of conformity tasks under system 4

Tasks		Content of the task	Evaluation of conformity clauses to apply
Tasks under the responsibility of the manufacturer	Factory production control (FPC)	Parameters related to all characteristics of Tables ZA.1.1 and/or ZA.1.2 relevant for the intended use.	8.3
	Initial type testing	All characteristics of Tables ZA.1.1 and/or ZA.1.2, namely bending under downward load[a], impact strength[a], tearing strength, water impermeability, durability and thermal coefficient[a] relevant for the intended use	8.2

[a] Applies to roofing products only.

Licensed Copy: sheffieldun sheffieldun, na, Mon Nov 06 09:46:29 GMT+00:00 2006, Uncontrolled Copy, (c) BSI

Licensed Copy: sheffieldun sheffieldun, na, Mon Nov 06 2006, 09:46:29 GMT+00:00 2006, Uncontrolled Copy, (c) BSI

ZA.2.2 EC Certificate and Declaration of conformity

(In case of products under system 1): When compliance with the conditions of this Annex is achieved, the certification body shall draw up a certificate of conformity (EC Certificate of conformity), which entitles the manufacturer to affix the CE marking.

This certificate shall include:

— name and address and identification number of the certification body;

— name and address of the manufacturer, or his authorized representative established in the EEA, and place of production;

— description of the product (identification, use, ...);

NOTE Where some of the information required for the Declaration is already given in the CE marking information, it does not need to be repeated.

— provisions to which the product conforms (i.e. Annex ZA of this EN), and a reference to ITT and FPC reports as appropriate;

— particular conditions applicable to the use of the product, (e.g. provisions for use under certain conditions);

— number of the certificate;

— conditions of validity of the certificate, where applicable;

— name of, and position held by, the person empowered to sign the certificate;

In addition, the manufacturer shall draw up a declaration of conformity (EC Declaration of conformity), including the following:

— name and address of the manufacturer, or his authorized representative established in the EEA;

— name and address of the certification body;

— description of the product (identification, use, ...), and a copy of the information accompanying the CE marking;

— provisions to which the product conforms (i.e. Annex ZA of this EN);

— particular conditions applicable to the use of the product (e.g. provisions for use under certain conditions);

— number of the accompanying EC Certificate of conformity;

— name of, and position held by, the person empowered to sign the declaration on behalf of the manufacturer or of his authorized representative.

(In case of products under system 3): when compliance with the conditions of this Annex is achieved, the manufacturer or his agent established in the EEA shall prepare and retain a declaration of conformity (EC Declaration of Conformity), which authorizes the affixing of the CE marking. This declaration shall include:

— name and address of the manufacturer, or his authorized representative established in the EEA, and place of production;

— description of the product (identification, use, ...), and a copy of the information accompanying the CE marking;

NOTE Where some of the information required for the Declaration is already given in the CE marking information, it does not need to be repeated.

— provisions to which the product conforms (i.e.: Annex ZA of this EN) , and a reference to ITT and FPC reports as appropriate;

— particular conditions applicable to the use of the product (e.g. provisions for use under certain conditions);

— name and address of the notified laboratory(ies);

— name of, and position held by, the person empowered to sign the declaration on behalf of the manufacturer or of his authorized representative.

(In case of products under system 4): when compliance with the conditions of this Annex is achieved, the manufacturer or his agent established in the EEA shall prepare and retain a declaration of conformity (EC Declaration of Conformity), which authorizes the affixing of the CE marking. This declaration shall include:

— name and address of the manufacturer, or his authorized representative established in the EEA, and place of production;

— description of the product (identification, use, ...), and a copy of the information accompanying the CE marking;

NOTE Where some of the information required for the Declaration is already given in the CE marking information, it does not need to be repeated.

— provisions to which the product conforms (i.e.: Annex ZA of this EN), and a reference to ITT and FPC reports as appropriate;

— particular conditions applicable to the use of the product (e.g. provisions for use under certain conditions);

— name of, and position held by, the person empowered to sign the declaration on behalf of the manufacturer or of his authorized representative.

The declaration, and certificate if relevant, shall be presented in the language or languages accepted in the Member State in which the product is to be used.

Licensed Copy: sheffieldun sheffieldun, na, Mon Nov 06 09:46:29 GMT+00:00 2006, Uncontrolled Copy, (c) BSI

Licensed Copy: sheffieldun sheffieldun, na, Mon Nov 06 09:46:29 GMT+00:00 2006, Uncontrolled Copy, (c) BSI

ZA.3 CE marking

The manufacturer or his authorised representative established within the EEA is responsible for the affixing of the CE marking. The CE marking symbol to affix shall be in accordance with Directive 93/68/EEC and shall appear on the packaging and/or on the accompanying commercial documents, together with the following information:

— identification number of the certification body (if relevant), and;

— name or identifying mark and registered address of the manufacturer, and;

— last two digits of the year in which the marking was affixed, and;

— number of the EC product conformity certificate (system 1 products only);

— number of this standard (EN 534), and;

— product category, and;

— information on the relevant essential characteristics in Tables ZA.1.1 and/or ZA.1.2:

  — external fire performance (if relevant), including mounting and fixing conditions;

  — reaction to fire categories (if relevant), including mounting and fixing conditions if appropriate;

  — thermal coefficient (if relevant).

The “No performance determined” (NPD) option may not be used where the characteristic is subject to a threshold level. Otherwise, the NPD option may be used when and where the characteristic, for a given intended use, is not subject to regulatory requirements.

Figure ZA.1 gives an example of the information to be given on the packaging and/or on the accompanying commercial documents for products intended for both roof and external wall covering, in reaction to fire Class F (i.e. attestation system 3 on account of external fire performance).

CE	*CE conformity marking, consisting of the "CE"-symbol given in Directive 93/68/EEC.*
AnyCo Ltd, PO Box 21, B-1050 **06**	*Name or identifying mark and registered address of the producer* *Last two digits of the year in which the marking was affixed*
EN 534 Corrugated bitumen sheets for roof and external wall covering Category S Reaction to fire: F External fire performance: B_{roof}(2), tested: screwed on timber battens with no underlying material Thermal coefficient: 80×10^{-6} 1/K	*No. of European Standard* *Description of product* *and* *information on regulated characteristics*

Figure ZA.1 — Example CE marking information

In addition to any specific information relating to dangerous substances shown above, the product should also be accompanied, when and where required and in the appropriate form, by documentation listing any other legislation on dangerous substances for which compliance is claimed, together with any information required by that legislation.

NOTE *European legislation without national derogations need not be mentioned.*

Licensed Copy: sheffieldun sheffieldun, na, Mon Nov 06 09:46:29 GMT+00:00 2006, Uncontrolled Copy, (c) BSI

Licensed Copy: sheffieldun sheffieldun, na, Mon Nov 06 09:46:29 GMT+00:00 2006, Uncontrolled Copy, (c) BSI

blank

Licensed Copy: sheffieldun sheffieldun, na, Mon Nov 06 09:46:29 GMT+00:00 2006, Uncontrolled Copy, (c) BSI

BSI — British Standards Institution

BSI is the independent national body responsible for preparing British Standards. It presents the UK view on standards in Europe and at the international level. It is incorporated by Royal Charter.

Revisions

British Standards are updated by amendment or revision. Users of British Standards should make sure that they possess the latest amendments or editions.

It is the constant aim of BSI to improve the quality of our products and services. We would be grateful if anyone finding an inaccuracy or ambiguity while using this British Standard would inform the Secretary of the technical committee responsible, the identity of which can be found on the inside front cover. Tel: +44 (0)20 8996 9000. Fax: +44 (0)20 8996 7400.

BSI offers members an individual updating service called PLUS which ensures that subscribers automatically receive the latest editions of standards.

Buying standards

Orders for all BSI, international and foreign standards publications should be addressed to Customer Services. Tel: +44 (0)20 8996 9001. Fax: +44 (0)20 8996 7001. Email: orders@bsi-global.com. Standards are also available from the BSI website at http://www.bsi-global.com.

In response to orders for international standards, it is BSI policy to supply the BSI implementation of those that have been published as British Standards, unless otherwise requested.

Information on standards

BSI provides a wide range of information on national, European and international standards through its Library and its Technical Help to Exporters Service. Various BSI electronic information services are also available which give details on all its products and services. Contact the Information Centre. Tel: +44 (0)20 8996 7111. Fax: +44 (0)20 8996 7048. Email: info@bsi-global.com.

Subscribing members of BSI are kept up to date with standards developments and receive substantial discounts on the purchase price of standards. For details of these and other benefits contact Membership Administration. Tel: +44 (0)20 8996 7002. Fax: +44 (0)20 8996 7001. Email: membership@bsi-global.com.

Information regarding online access to British Standards via British Standards Online can be found at http://www.bsi-global.com/bsonline.

Further information about BSI is available on the BSI website at http://www.bsi-global.com.

Copyright

Copyright subsists in all BSI publications. BSI also holds the copyright, in the UK, of the publications of the international standardization bodies. Except as permitted under the Copyright, Designs and Patents Act 1988 no extract may be reproduced, stored in a retrieval system or transmitted in any form or by any means – electronic, photocopying, recording or otherwise – without prior written permission from BSI.

This does not preclude the free use, in the course of implementing the standard, of necessary details such as symbols, and size, type or grade designations. If these details are to be used for any other purpose than implementation then the prior written permission of BSI must be obtained.

Details and advice can be obtained from the Copyright & Licensing Manager. Tel: +44 (0)20 8996 7070. Fax: +44 (0)20 8996 7553. Email: copyright@bsi-global.com.

BSI

389 Chiswick High Road

London

W4 4AL