BRITISH STANDARD

BS 5709:2001

Gaps, gates and stiles — Specification

ICS 91.090

NO COPYING WITHOUT BSI PERMISSION EXCEPT AS PERMITTED BY COPYRIGHT LAW

Licensed copy: Vocational Training Council, Vocational Training Council, Version correct as of 18/03/2017

Committees responsible for this British Standard

The preparation of this British Standard was entrusted to Technical Committee B/201, Fences and crossing points, upon which the following bodies were represented:

Association of Security Consultants

British Precast Concrete Federation Ltd.

County Surveyors' Society

Department of the Environment, Transport and the Regions [Building Research Establishment (BRE)]

Department of the Environment, Transport and the Regions (Highways Agency)

European Fencing Industry Association

Fencing Contractors' Association

Forestry Commission

Galvanizers' Association

National Farmers' Union

Open Spaces Society

Security Facilities Executive

Timber Trade Federation

UK Forest Products Association

UK Steel Association

The following bodies were also represented in the drafting of the standard, through subcommittees and panels:

British Horse Society

British Trust for Conservation Volunteers

British Wood Preserving and Damp-proofing Association

Country Landowners' Association

Countryside Agency

Fieldfare Trust

Institute of Public Rights of Way Officers

National Trust

Ramblers Association

Co-opted members

This British Standard, having been prepared under the direction of the Sector Committee for Building and Civil Engineering, was published under the authority of the Standards Committee and comes into effect on 15 June 2001

© BSI 06-2001

First published as BS 5709 March 1979
Second edition June 2001

The following BSI references relate to the work on this standard:
Committee reference B/201
Draft for comment 99/108871 DC

ISBN 0 580 33287 X

Amendments issued since publication

Amd. No.	Date	Comments

Licensed copy: Vocational Training Council, Version correct as of 18/03/2017

Contents

		Page
Committees responsible		Inside front cover
Foreword		ii
1	Scope	1
2	Terms and definitions	1
3	Selection of gap, gate or stile — order of preference	2
3.1	General	2
3.2	Choice of structure	3
4	Performance requirements for gaps and structures	3
4.1	General requirements applicable to all gaps and structures	3
4.2	Gaps	4
4.3	Pedestrian gates and bridle gates	5
4.4	Kissing gates	7
4.5	Stiles	12
4.6	Dog gates	16
Annex A (informative) Materials		18
Bibliography		19
Figure 1 — Example of a gap constructed in a hedge		4
Figure 2 — Example of a one-way opening timber, unlatched, pedestrian gate		6
Figure 3 — Example of a self-closing two-way opening timber bridle gate using a slotted plate self-closing mechanism		7
Figure 4 — Example of a trapezial timber kissing gate		8
Figure 5 — Example of a rectangular timber kissing gate		9
Figure 6 — Example of a curved metal kissing gate with RADAR bypass		10
Figure 7 — Example of a curved design metal kissing gate		11
Figure 8 — Example of a wide post and rail stile		13
Figure 9 — Example of a narrow post and rail stile		14
Figure 10 — Example of a stone stile		15
Figure 11 — Example of a horse stile		16
Figure 12 — Example of a dog gate attached to a timber post and rail stile		17
Table 1 — Accessibility of structures on footpaths		3

Licensed copy: Vocational Training Council, Vocational Training Council, Version correct as of 18/03/2017

Foreword

This British Standard has been prepared by Technical Committee B/201. It is a revision of BS 5709:1979, which is withdrawn.

Country walking, cycling and riding have continued to increase since the first edition of this standard was published in 1979. For path users, recent thinking and legislation has focused on the need for less able bodied and disabled people to be able to access the countryside. The proportion of walkers of advancing years, with decreased mobility associated with arthritis of the knee and hip and other age related disabilities, has also increased.

This revision places emphasis on the needs of all path users in the context of the actual agricultural needs of the landowners.

The United Kingdom is noted for the variety of stiles and other devices which enable crossings to be made of boundaries where animals need to be contained. Whilst local traditional forms of gates and stiles should not be lightly discarded for a standard design, it should be borne in mind that the main objective is for gates and stiles to be adequately stockproof while providing good access for all legitimate users. Accordingly this edition specifies structures by their functional performance, thus allowing many types of structure to conform to the requirements. However, it also tries to meet the need for actual buildable designs by means of examples that meet the functional performance criteria.

This standard is intended to be used by:

a) those planning, specifying, or approving new structures on paths (e.g. highway authorities, district councils, landowners, tenants, user groups, and others handling diversions, creations or dedications of paths subject to gaps, gates and stiles);

b) those making and buying gate and stile kits;

c) those installing gates and stiles (e.g. landowners, contractors, volunteers);

d) those replacing, maintaining and inspecting gates and stiles (e.g. farmers and highway authority officers).

It also gives guidance on design where field-measurement is physically difficult or subjective.

NOTE This standard confines itself to the main structure across boundaries (e.g. hedge, fence, wall). Where the path is wider than this structure an additional structure needs to fill the rest of the width. This may be the original hedge or fence or a new one.

Gates and stiles, and also gaps where the side structure or growth restrict the full width of the right of way, are legally obstructions unless the path has been dedicated subject to those limitations, or unless they have been authorized by the Highway Authority, or by a public path order or creation agreement (see Highways Act, 1980 [1]). Gates, stiles and the side structures or growth alongside gaps are required to be maintained by the landowner to a standard of repair required to prevent unreasonable interference with the rights of persons using the footpath or bridleway. This British Standard provides specifications for gaps, gates and stiles to ensure that they cause the minimum of inconvenience to users whilst fulfilling the requirement for gates and stiles of substantially preventing the passage of animals and, for all structures, where appropriate and lawful, preventing access to some of those not entitled to use the path.

In considering if and what type of structure is necessary the needs of those with disabilities should be taken into account and possible liabilities under the Disability Discrimination Act 1995 [2] should be considered. The Countryside and Rights of Way Act 2000 [3] requires local authorities authorizing the installation of stiles, gates and other works on footpaths and bridleways to have regard to the needs of people with mobility problems.

Licensed copy: Vocational Training Council, Vocational Training Council, Version correct as of 18/03/2017

© BSI 06-2001

Annex A is informative.

A British Standard does not purport to include all necessary provisions of a contract. Users of British Standards are responsible for their correct application.

Compliance with a British Standard does not itself confer immunity from legal obligations.

Licensed copy: Vocational Training Council, Vocational Training Council, Version correct as of 18/03/2017

Summary of pages

This document comprises a front cover, an inside front cover, pages i to iv, pages 1 to 19 and a back cover.

The BSI copyright notice displayed in this document indicates when the document was last issued.

Licensed copy: Vocational Training Council, Vocational Training Council, Version correct as of 18/03/2017

blank

Licensed copy: Vocational Training Council, Version correct as of 18/03/2017

1 Scope

This British Standard specifies field-measurable performance requirements for gaps, gates and stiles for footpaths and bridleways. It provides a hierarchy of performance requirements to enable choices to be made as to which type of structure is most appropriate in given circumstances.

This British Standard does not apply to stiles with moving parts.

2 Terms and definitions

For the purposes of this British Standard the following terms and definitions apply.

2.1
bridle gate
device hinged at one side installed in a boundary such as a fence, hedge or wall which acts as a barrier to livestock and motor vehicles, but which allows the passage of horse-riders, cyclists, pedestrians and their dogs, and mobility vehicles

2.2
cycle
wheeled, non-motorized, pedal or hand powered vehicle

2.3
cyclist
user of wheeled, non-motorized, pedal or hand powered vehicle

2.4
dog gate
device allowing the passage of a dog, whilst preventing the passage of livestock

2.5
gap
unimpeded way through a boundary together with any structure defining its width

2.6
horse stile
non-moving structure designed to allow horses to pass whilst forming a deliberate barrier to motor cycles

2.7
kissing gate
device consisting of a hinged gate that is constrained to swing between two posts at the opening of an enclosure forming part of the structure, and which allows the passage of legitimate users, whilst preventing the passage of livestock etc.

2.8
livestock
animals such as cattle, sheep (including lambs) and horses, but excluding dogs and deer

2.9
manoeuvring space
space needed by persons, horses, cycles, mobility vehicles to traverse the gap or structure conveniently and safely

2.10
mobility vehicle
wheeled vehicle such as a wheelchair, invalid carriage or children's pushchair or pram

NOTE This term includes invalid carriages of Classes 1, 2, and 3 as defined in S.I. 1988 No. 2268 Road traffic — The Use of Invalid Carriages on Highways Regulations 1988 [4].

2.11
pedestrian gate
device hinged at one side, installed in a boundary such as a fence, hedge or wall which acts as a barrier to livestock etc., but which allows the passage of pedestrians and their dogs, and mobility vehicles

Licensed copy: Vocational Training Council, Vocational Training Council Version correct as of 18/03/2017

2.12
RADAR lock
lock with a key, normally only available to disabled people

NOTE The key is the design of the Royal Association for Disability and Rehabilitation (RADAR), 250 City Road, London EC1V 8AF.

2.13
self-closing gate
gate which always returns to a position touching, or in line with, the closing post

2.14
stile
fixed device allowing the passage of pedestrians over or through a fence, wall or hedge, while forming a barrier to livestock or other animals, cycles and vehicles

NOTE Stiles with moving parts are not covered by this standard because they may be prone to failure or vandalism and may cause a safety hazard.

2.15
stockproof
descriptive of a structure that is intended to prevent the passage of livestock

NOTE Animals other than livestock, including wild animals, may require specially designed structures (e.g. tall kissing gates to prevent the passage of deer).

3 Selection of gap, gate or stile — order of preference

3.1 General

The selection of a gap, gate or stile, which permits people to use a path crossing a field boundary such as a hedge, fence or stone wall, shall result in as little restriction as possible for potential users, while meeting the actual agricultural needs of the landowners (principle of least restrictive option).

The following are legitimate path users with respect to categories of rights of way (see Highways Act 1980 [1] and Countryside Act 1968 [5]):

a) footpaths:

1) walkers (pedestrians);

2) wheelchair users;

3) walkers with dogs under control;

4) walkers with prams/pushchairs;

b) bridleways:

1) all footpath users;

2) horse riders;

3) cyclists;

4) persons leading horses.

NOTE 1 Where a landowner grants access by concession there is scope to define the range of users differently from those in right of way legislation for public paths. For example, a permissive path could allow walkers and horse riders but preclude cyclists.

NOTE 2 Care is required in planning and installing gaps, gates and stiles on all routes where restrictions to mobility vehicle users, including invalid carriage users and other disabled persons, may be created (see Foreword).

If a gate, kissing gate or stile is to be provided on a path an assessment shall be made of whether such action is reasonable. The following points shall be considered in the assessment:

a) the likelihood of the structure, taken in the context of its environment, causing some restriction to users (e.g. a gate will be difficult for some people with reach or dexterity difficulties);

b) the extent of any restriction which will be created (e.g. a stile will create an absolute barrier to wheelchair users and many walkers with pushchairs);

c) the effort or cost that would be required to take other measures to remove the need for a restriction.

 © BSI 06-2001

Licensed copy: Vocational Training Council, Version correct as of 18/03/2017

In general terms the principle of applying the least restrictive option means that a path crossing a field boundary shall in the first instance be through a gap (see **4.1** and **4.2**). If a gap is inappropriate, for example because of the need to control livestock, the second choice shall be a gate (see **4.1** and **4.3**), which is easy to operate in both directions of travel by all people entitled to use the path. If a gate is inappropriate, a kissing gate (see **4.1** and **4.4**) shall be chosen. Stiles shall only be used for new structures when exceptional circumstances require them. With the exception of horse stiles (see **4.5.4**), this standard is aimed at the repair and refurbishment of existing stiles.

NOTE 3 As no single structure provides access across field boundaries that is satisfactory in all situations, this standard provides a hierarchy of performance requirements to enable choices to be made as to which structure is most appropriate.

3.2 Choice of structure

Where there are no explicitly identified counter reasons, the type of structure chosen shall be the least restrictive option in accordance with the following list (displayed in least restrictive option order):

a) gap;

b) gate;

c) kissing gate;

d) stile.

Table 1 shows the performance normally to be expected from the structures listed in their order of preference.

Table 1 — Accessibility of structures on footpaths

Structure (in order of preference)	Type of structure	Performance
Gap	Defined gap	Allows all users
Gate	Pedestrian gate or bridle gate without latch	Allows most users
	Pedestrian gate or bridle gate with latch	Inhibits some users (e.g. those with dexterity and reach difficulties)
Kissing gate	Kissing gate, without latch	Inhibits some users (e.g. wheelchair users) depending on layout and size
	Kissing gate, with latch	Inhibits some users (e.g. wheelchair users) and generally more difficult to use than latchless gates
Stile	Wide post and rail stile Narrow post and rail stile Stone stile	Prevents pushchairs, and wheelchair users; inhibits the less agile and some walkers with dogs

4 Performance requirements for gaps and structures

4.1 General requirements applicable to all gaps and structures

4.1.1 There shall be no barbed wire, or electric fencing capable of giving a shock, inside the gap or structure or within 1 m of the gap or structure or of the manoeuvring space.

4.1.2 Any finger or direction post carrying a protruding direction sign shall not form part of the stile or gate post, but shall be mounted separately so that the direction arm cannot overhang the gap or structure or intrude into the manoeuvring space.

4.1.3 The ground within 1 m of the structure and the ground through the structure shall be kept free of surface water (except immediately after rain), and provide a firm surface.

Licensed copy: Vocational Training Council, Version correct as of 18/03/2017

4.1.4 Where the structure abuts a vehicular road the structure shall be set back at least 4 m from the carriageway for bridleways and at least 2 m for footpaths to allow users to access and traverse the structure without risk of being struck by vehicles. For footpaths likely to be used by groups of walkers and in all cases where a footpath directly crosses a road (i.e. to another path), the structure shall be set back 4 m.

4.1.5 The structure shall contain no projections such as bolts likely to catch on the clothing of path users or to injure people or animals. All edges likely to come into contact with the user shall be rounded to a radius no sharper than 2 mm or chamfered with at least a 3 mm flat. Protrusions integral to the design (e.g. latches) shall be rounded, e.g. using "D" loops.

4.1.6 Where moving parts of the structure could trap fingers, for instance at the gate closure line, the area shall be maximized to reduce the point pressure.

NOTE This trapping may be avoided by preventing the gate closing completely, for example by installing a block of resilient material on a part of the closing line.

4.1.7 When the gap or structure fails to conform to any one or more of the requirements of this standard it shall be repaired, replaced, or removed.

4.1.8 The specified requirements shall be checked by visual inspection and measurements which can be carried out on the installed structure and which do not require the use of specialized equipment.

NOTE The structure should be built and maintained with adequate strength and rigidity and quality of material and design to meet the requirements in this standard and to ensure the safe and convenient passage of users, as well as providing a reliable barrier to stock if required to do so.

4.2 Gaps

Gaps shall conform to the following requirements in addition to those of **4.1** (see example in Figure 1):

a) for footpaths the minimum width of gaps shall be 900 mm;

b) for bridleways the minimum width of gaps shall be 1 525 mm.

NOTE Many path maintenance vehicles can gain access to paths through a 1 525 mm gap.

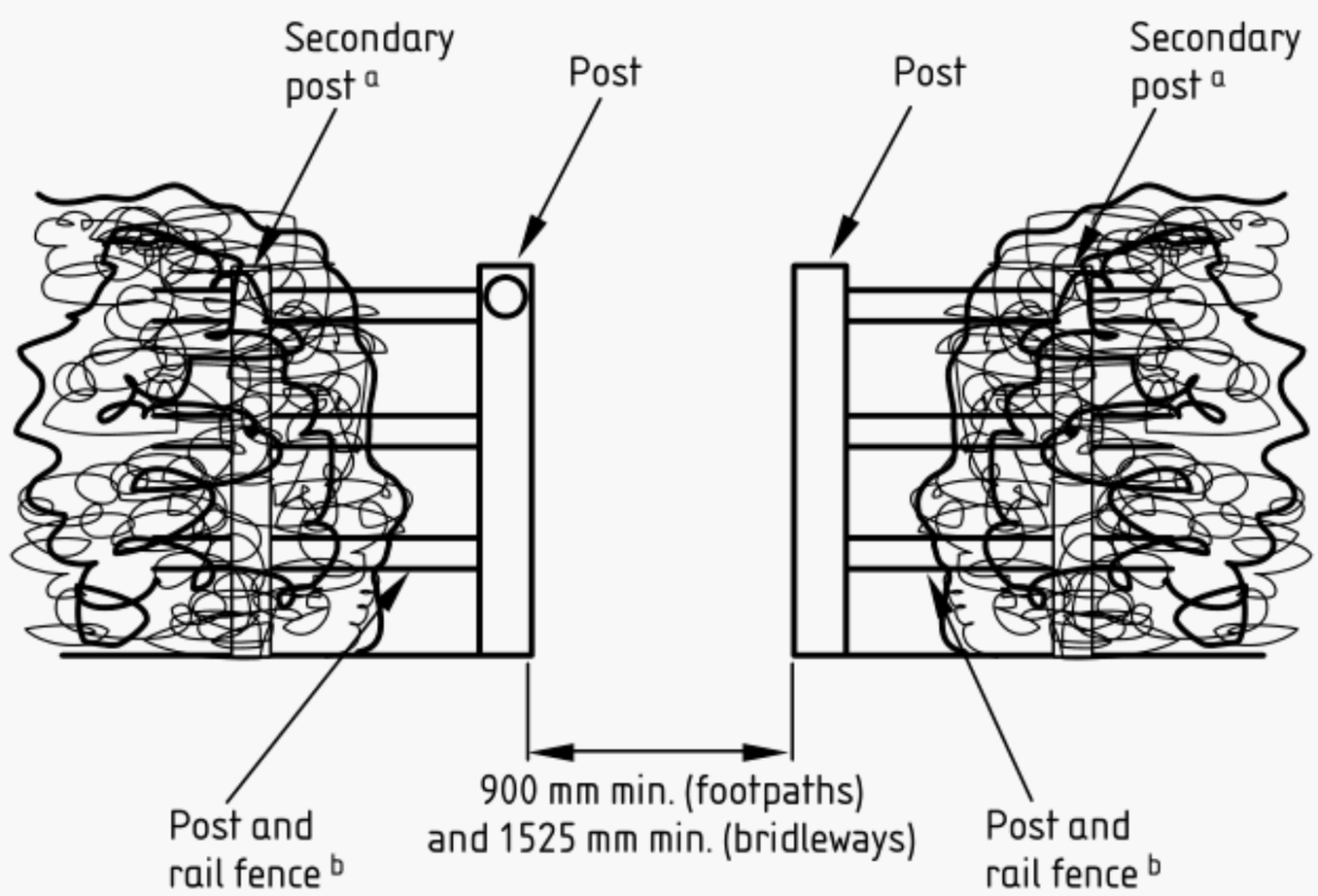

This example is illustrative of one design of a gap for which dimensional and other requirements are specified in **4.1** and **4.2**.

[a] The two secondary posts are driven into the ground.
[b] The post and rail fence is extended 1.5 m to 2 m either side of the two posts which define the gap width ensuring that the hedge does not need to be cut back, clear of the gap, as frequently as if the hedge formed the edge of the gap.

Figure 1 — Example of a gap constructed in a hedge

© BSI 06-2001

Licensed copy: Vocational Training Council, Vocational Training Council Version correct as of 18/03/2017

4.3 Pedestrian gates and bridle gates

Pedestrian gates and bridle gates shall conform to the following requirements in addition to those of **4.1** (see examples in Figure 2 and Figure 3).

a) The minimum clear width of pedestrian gates shall be 1 000 mm and the minimum width of bridle gates between posts shall be 1 525 mm.

NOTE 1 Many path maintenance vehicles can gain access to paths through a 1 525 mm spacing between posts;

b) Latches, if fitted, shall be visible, accessible and operable from both sides of the gate.

NOTE 2 All latches should be easily unlatched and simple to operate.

c) Gates shall swing freely and a force no greater than 50 N shall be needed to open them fully.

NOTE 3 50 N is approximately represented by 5 kg on a spring balance scale.

d) Self-closing pedestrian gates and bridle gates which do not adjoin roads shall be two-way.

NOTE 4 Gates are normally easier to use for all users if they open in the direction of travel, i.e. they are two-way. This avoids back-tracking to open the gate. It also avoids the risk with self-closing gates of the horse or mobility vehicle being jammed by the closing gate.

NOTE 5 The recommended method of self-closing is by means of offset hinges.

e) A manoeuvring space shall be provided either side of pedestrian gates and bridle gates to allow path users to operate the latch (if fitted) as well as to pass through the gateway.

NOTE 6 The opening side of one-way gates will normally need substantially more manoeuvring space than two-way gates owing to the need for the user to keep out of the way of the gate as it opens. Some horses and mobility vehicles need at least 3 m diameter to turn around in.

f) Gateposts shall not be used as straining posts for a fence.

g) In order to reduce shearing action on fingers etc. where two-way gates swing past a post, gates shall be at least 30 mm from the post they swing past (except for any latch area).

h) For gates on public paths, a notice indicating a public footpath or bridleway shall be made clearly visible to users approaching from either side of the gate. The notice shall be on the structure or within 2 m of it.

NOTE 7 See the Countryside Commission's publication *Waymarking public rights of way*, CCP246, 1992 [6] and the Countryside Act 1968, section 27 [5].

i) For one-way opening gates, the overlap at the closing line on the closing post shall be at least 30 mm.

Licensed copy: Vocational Training Council, Version correct as of 18/03/2017

Dimensions in millimetres

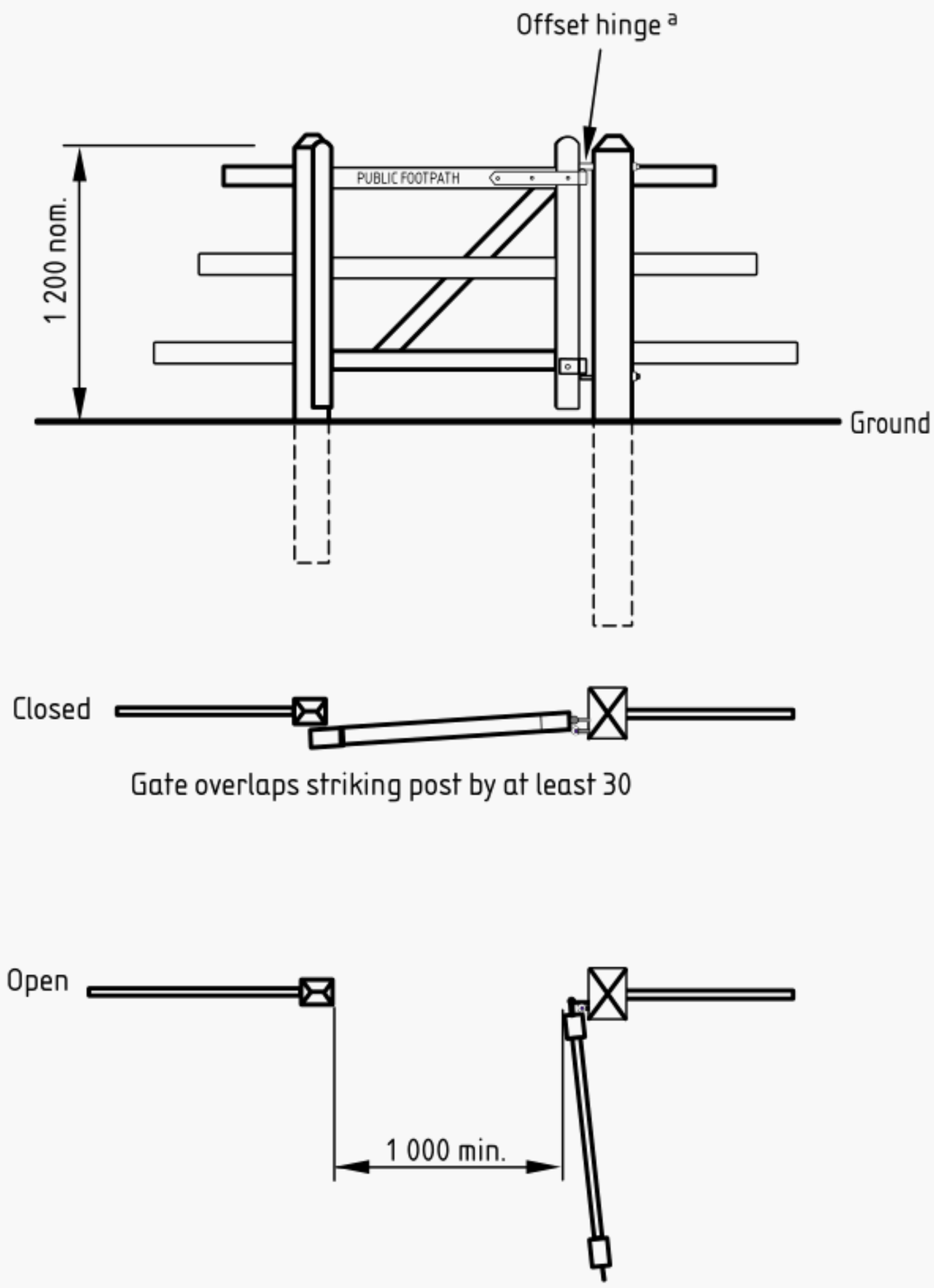

This example is illustrative of one design of a pedestrian gate for which dimensional and other requirements are specified in **4.1** and **4.3**.

NOTE A ground (or other) stop may be needed to prevent opening the gate beyond the point where self-closing functions correctly.

[a] Offset hinges designed for 90° opening.

Figure 2 — Example of a one-way opening timber, unlatched, pedestrian gate

© BSI 06-2001

Licensed copy: Vocational Training Council, Version correct as of 18/03/2017

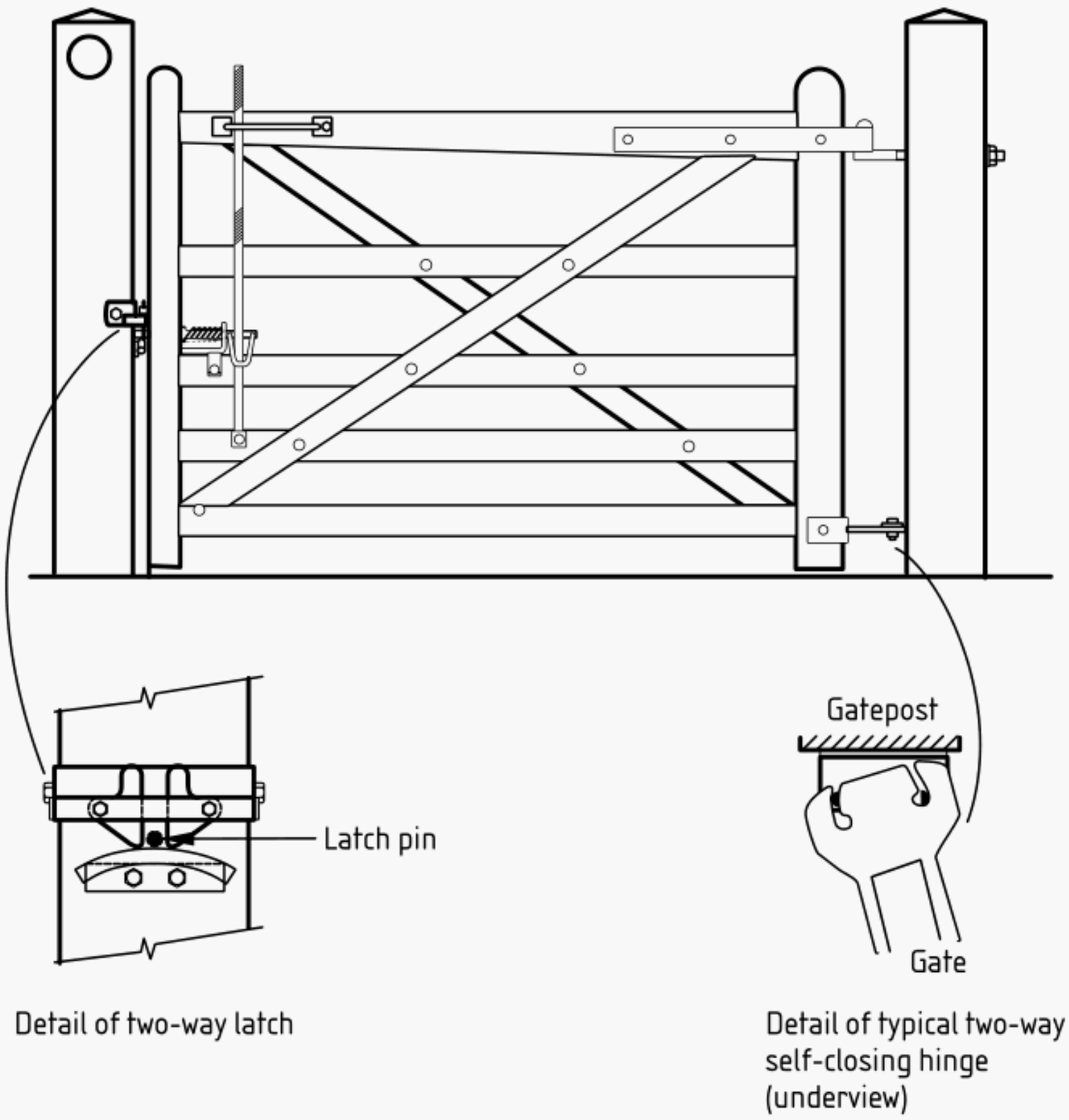

This example is illustrative of one design of a bridle gate for which dimensional and other requirements are specified in **4.1** and **4.3**.

Figure 3 — Example of a self-closing two-way opening timber bridle gate using a slotted plate self-closing mechanism

4.4 Kissing gates

Kissing gates shall conform to the following requirements in addition to those of **4.1** (see examples in Figure 4, Figure 5, Figure 6 and Figure 7).

a) A minimum internal manoeuvring space shall be provided so as to allow a 1 m diameter cylinder to pass through the kissing gate with its flat end on the ground.

NOTE 1 This requirement allows many mobility vehicles, including most pushchairs and some wheelchairs, to pass through the gate but deters motor cycles [a trapezium shape (see example in Figure 4) allows this requirement to be met whilst keeping the size of the structure to a minimum].

NOTE 2 With a self-closing gate, with or without latches, larger (deeper from gate to end of enclosure) enclosures are also stockproof and can allow larger wheelchairs to pass through the gate. A space of 1 600 mm from the gate in mid position to the mid point of the far end of the enclosure allows large wheelchairs to pass through, but also allows many motorcycles. A space of 1 400 mm prevents most motorcycles. A space of 1 200 mm to 1 400 mm allows most pushchairs but prevents wheelchairs.

NOTE 3 Where the length from the gate to the end of the enclosure is less than 1 600 mm consideration should be given to the provision of a RADAR lock operated gate. This RADAR gate may be either the gate that forms part of the kissing gate or a separate gate.

b) Latches, if fitted, shall be easily accessible from both sides of the kissing gate by all path users.

c) Gates shall swing freely.

d) A manoeuvring space shall be provided on either side of the gate to allow path users to operate the latch (if fitted) as well as to pass through the gateway.

NOTE 4 Some mobility vehicles need at least 3 m diameter to turn around in.

e) The gate overlap at the closing line on the closing post (whether the whole gate or just the locking tongue) shall be at least 30 mm.

f) For gates on public paths, a notice saying "Public Footpath" shall be made clearly visible to users approaching from either side. The notice shall be on the structure or within 2 m of it.

NOTE 5 Waymarks may fulfil this requirement.

g) Where use of a mobility vehicle is practicable, the ground within the gate, and the manoeuvring space shall either be level or shall be on a slope all in one plane and less than 1 in 10 gradient.

NOTE 6 In order to be stockproof, kissing gates should normally close away from the side of the boundary used predominantly by livestock and upright wickets, sheep netting or other means of stockproofing should be used according to agricultural requirements.

Dimensions in millimetres

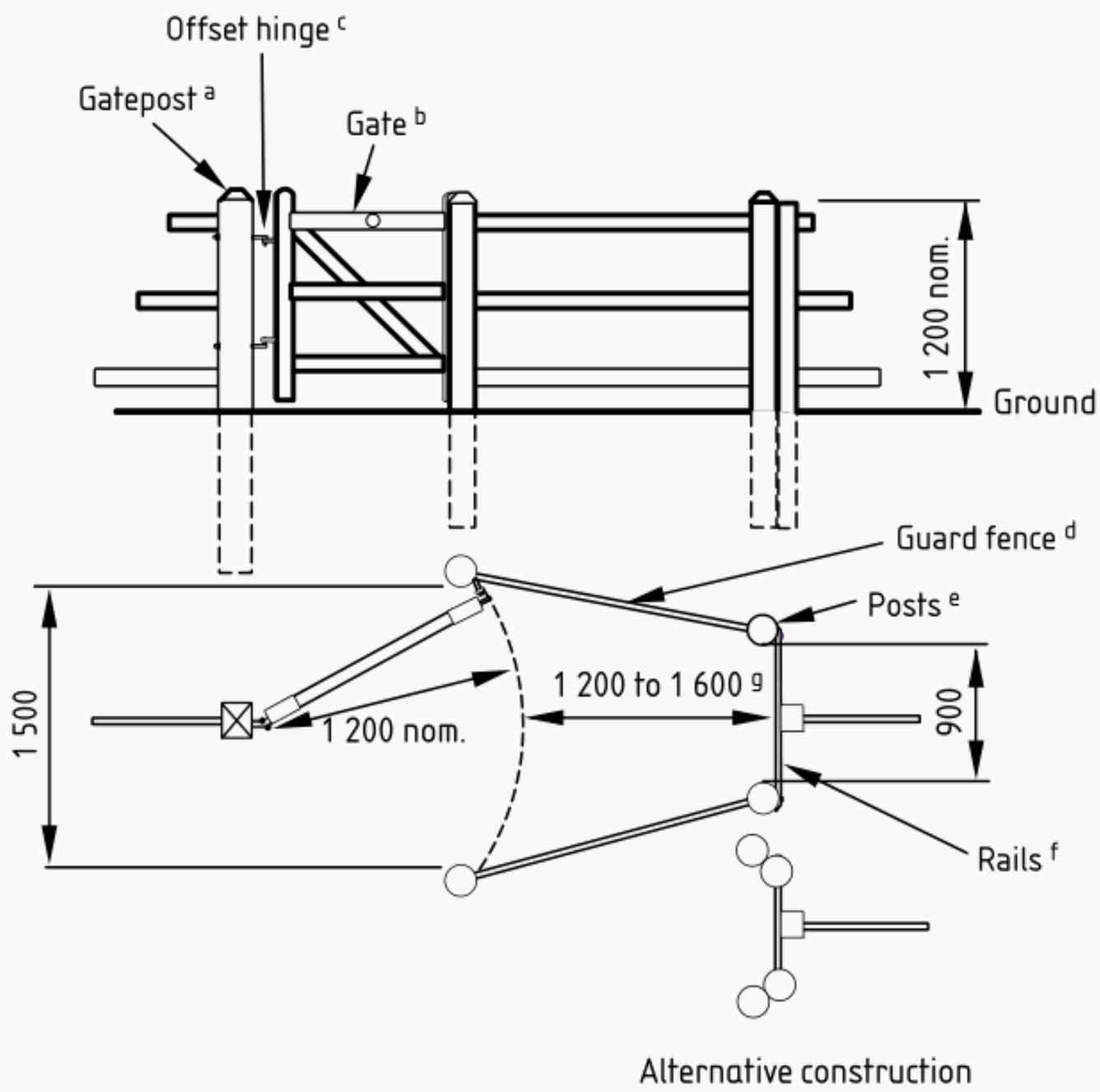

This example is illustrative of one design of a kissing gate for which dimensional and other requirements are specified in **4.1** and **4.3**.

This is an efficient structure that can be used by certain mobility vehicles.

[a] Gatepost: 125 mm × 125 mm × 1 950 mm, four ways weathered, embedded 750 mm into the ground, and concreted in.
[b] Gate: post and rail or wicket type, diagonally braced, 1 000 mm high and set 50 mm above ground level.
[c] Offset hinges to provide automatic closing.
[d] Guard fence: three sections.
[e] Posts 100 mm round or square × 1 850 mm long, embedded 600 mm in ground.
[f] Rails 75 mm × 50 mm morticed into posts or (for centre section) nailed into recesses in posts.
[g] See **4.4**, NOTE 2.

Figure 4 — Example of a trapezial timber kissing gate

Licensed copy: Vocational Training Council, Version correct as of 18/03/2017

© BSI 06-2001

Licensed copy: Vocational Training Council, Version correct as of 18/03/2017

Dimensions in millimetres

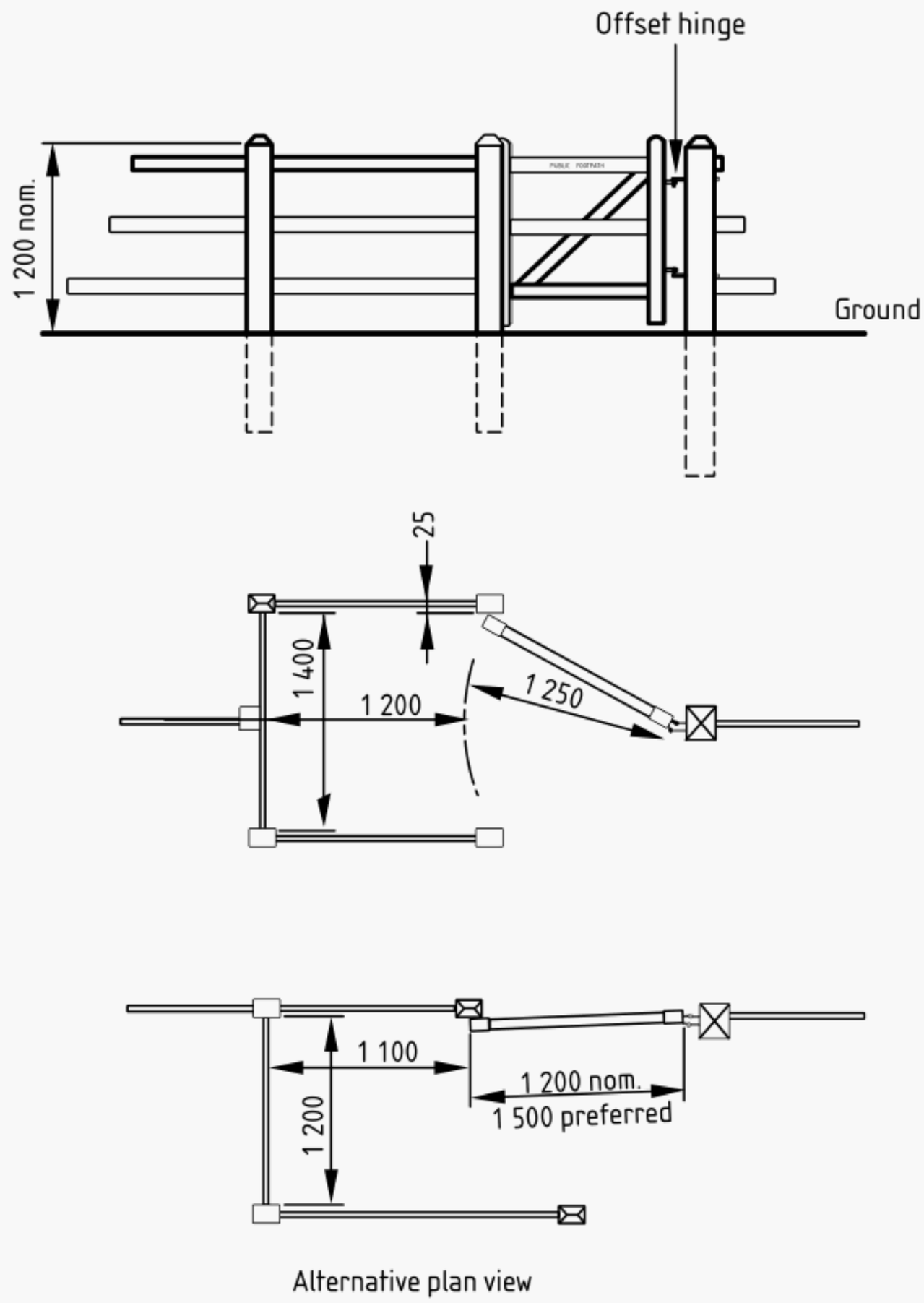

Alternative plan view for flush boundary fence (one-side construction). This layout may help avoid concern about leg injuries to horses. It is also useful on land ownership boundaries, requiring only one approval.

This example is illustrative of one design of a kissing gate for which dimensional and other requirements are specified in **4.1** and **4.4**.

Figure 5 — Example of a rectangular timber kissing gate

Licensed copy: Vocational Training Council, Version correct as of 18/03/2017

Dimensions in millimetres

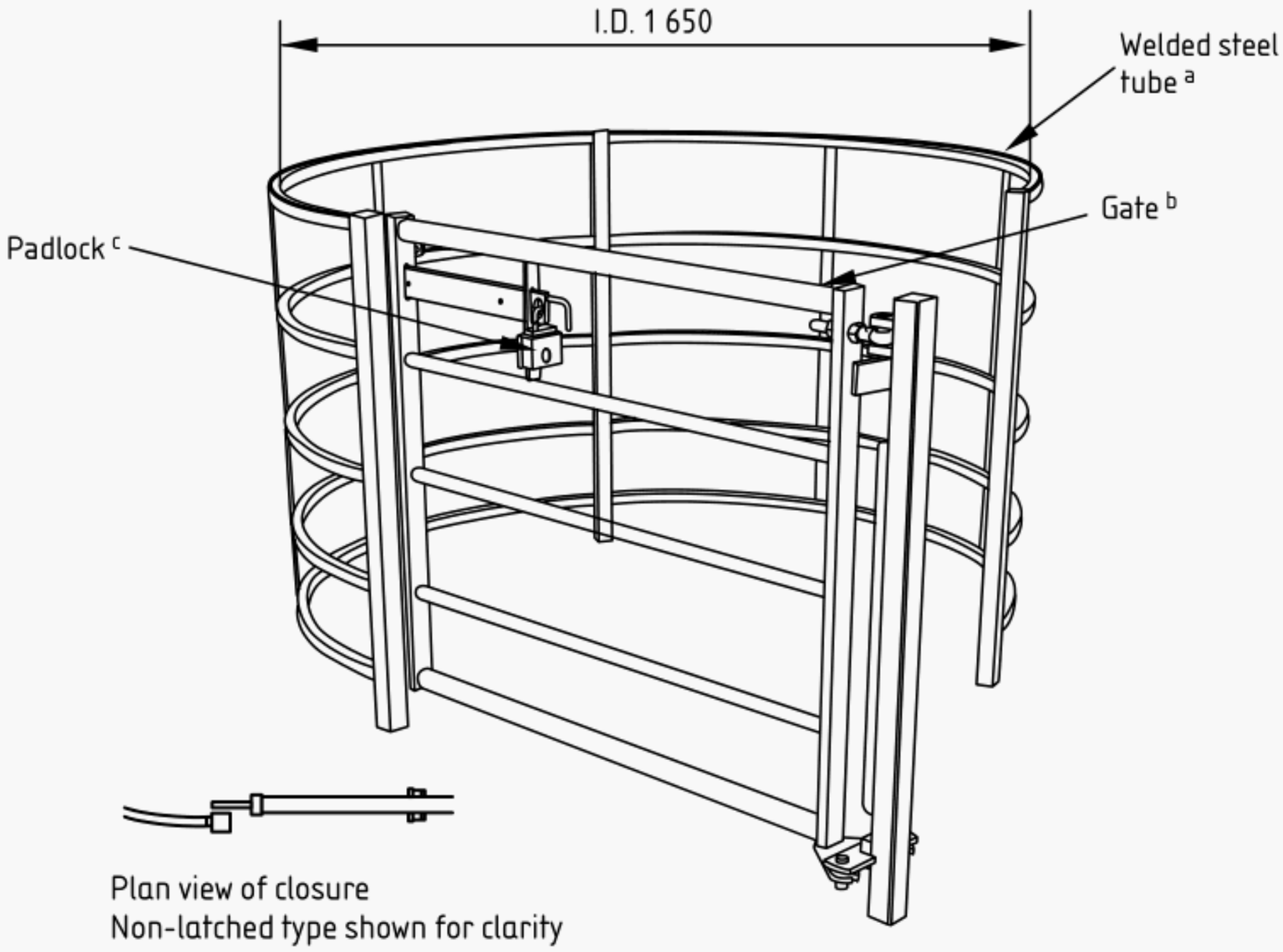

This example is illustrative of one design of a kissing gate for which dimensional and other requirements are specified in **4.1** and **4.4**.

Gate operates in two modes.

— As a conventional self-closing kissing gate suitable for pedestrians, dogs, and most mobility vehicles (children's pushchairs, wheelchairs). The design inhibits motorcycles and affords a high degree of stockproofing.

— With the release of the sliding latch by the use of a RADAR key the gate may be opened beyond the normal closing point allowing larger mobility vehicles and some path maintenance vehicles to pass through the gate.

NOTE See also Annex A for information on materials.

[a] Welded steel tube, hot dip galvanized.
[b] Gate 1 200 mm nominal length. (Gate may be either latched or unlatched type.)
[c] Padlock is captive, RADAR key operated.

Figure 6 — Example of a curved metal kissing gate with RADAR bypass

© BSI 06-2001

Licensed copy: Vocational Training Council, Version correct as of 18/03/2017

Dimensions in millimetres

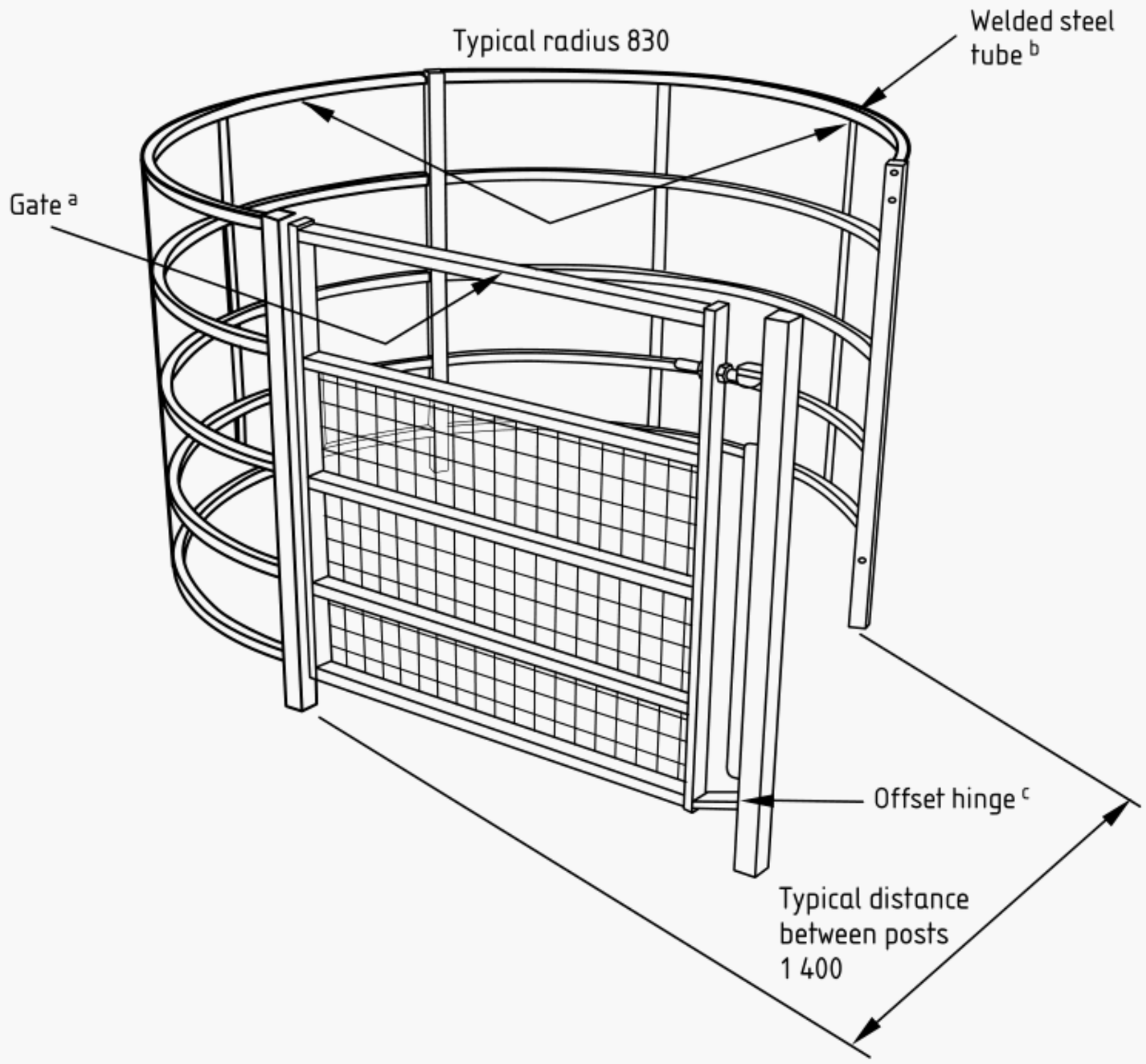

This example is illustrative of one design of a kissing gate for which dimensional and other requirements are specified in **4.1** and **4.4**.

NOTE See also Annex A for information on materials.

[a] Gate 1 200 mm nominal width.
[b] Welded steel tube, hot dip galvanized.
[c] Offset hinge ensures self-closing.

Figure 7 — Example of a curved design metal kissing gate

Licensed copy: Vocational Training Council, Version correct as of 18/03/2017

4.5 Stiles

4.5.1 *General*

NOTE Stiles should only be used for new structures when exceptional circumstances require them. With the exception of horse stiles, this standard is aimed at the repair and refurbishment of existing stiles.

All stiles, except horse stiles, shall conform to the following requirements in addition to those of **4.1** (see examples in Figure 8, Figure 9, Figure 10 and Figure 11).

a) Stiles shall have a maximum of two steps, of minimum width 200 mm, except on sloping ground when a third step, forming a stepping platform, of double step-width on one side of the stile only, may be provided.

b) The maximum distance between the ground and the top of the bottom step shall be 300 mm. The distance between the tops of the steps shall be a maximum of 300 mm.

c) When a mass of 75 kg is placed anywhere on a step or top rail a maximum deflection of 15 mm shall occur. When a mass of 150 kg is placed anywhere on a step or top rail no visible permanent deformation or cracking shall take place.

d) One, or two, hand posts shall be provided [see **4.5.2**d) and **4.5.3**d) respectively] unless the construction material is not appropriate [e.g. stone stiles, see f)]. The section of the hand post shall be between 70 mm and 100 mm diameter or across faces.

e) All edges of the structure likely to come into contact with the user shall be rounded to a radius no sharper than 2 mm or chamfered with at least a 2 mm flat.

f) For structures where hand posts are considered inappropriate (for example stone stiles), handholds shall be provided to help steady users of the structure.

g) Neither the hand posts nor any other posts of the main structure shall be used as straining posts for the adjoining fence.

h) Steps shall not have a slope in any direction greater than 1 in 30 (i.e. over any 300 mm of the step surface it shall not be more than 10 mm out of level). Posts shall also be vertical to 1 in 30 (i.e. over 1 m a post shall be not more than 33 mm away from the vertical).

4.5.2 *Wide post and rail stiles*

NOTE This type of stile is normally used by swinging each leg sideways over the stile in turn.

In addition to the requirements of **4.1** and **4.5.1**, wide post and rail stiles shall conform to the following requirements (see example in Figure 8).

a) The distance between the top of the top step and the top of the top rail shall be a maximum of 450 mm.

b) The minimum width of the stile measured along the top rail shall be 1 200 mm between stile posts.

c) The height of the top rail from the ground (measured beside the top step) shall be a maximum of 1 050 mm and a minimum of 900 mm.

d) Either one stile post shall be provided, forming a handpost, extending 500 mm to 700 mm above the top rail or a handhold pole shall be attached to a stile post, extending the same distance. The other stile post shall extend a maximum of 75 mm above the rail.

e) Steps shall either be at 90° ± 10° to the fence line (or stile rails) or crossed over at 45° ± 10° to it.

f) The horizontal distance between the centre of the top step and the near side of the extended post shall be between 350 mm and 450 mm for parallel (90°) steps and between 500 mm and 600 mm for crossed (45°) steps.

g) The length of step shall be a minimum of 900 mm.

© BSI 06-2001

Licensed copy: Vocational Training Council, Version correct as of 18/03/2017

Dimensions in millimetres

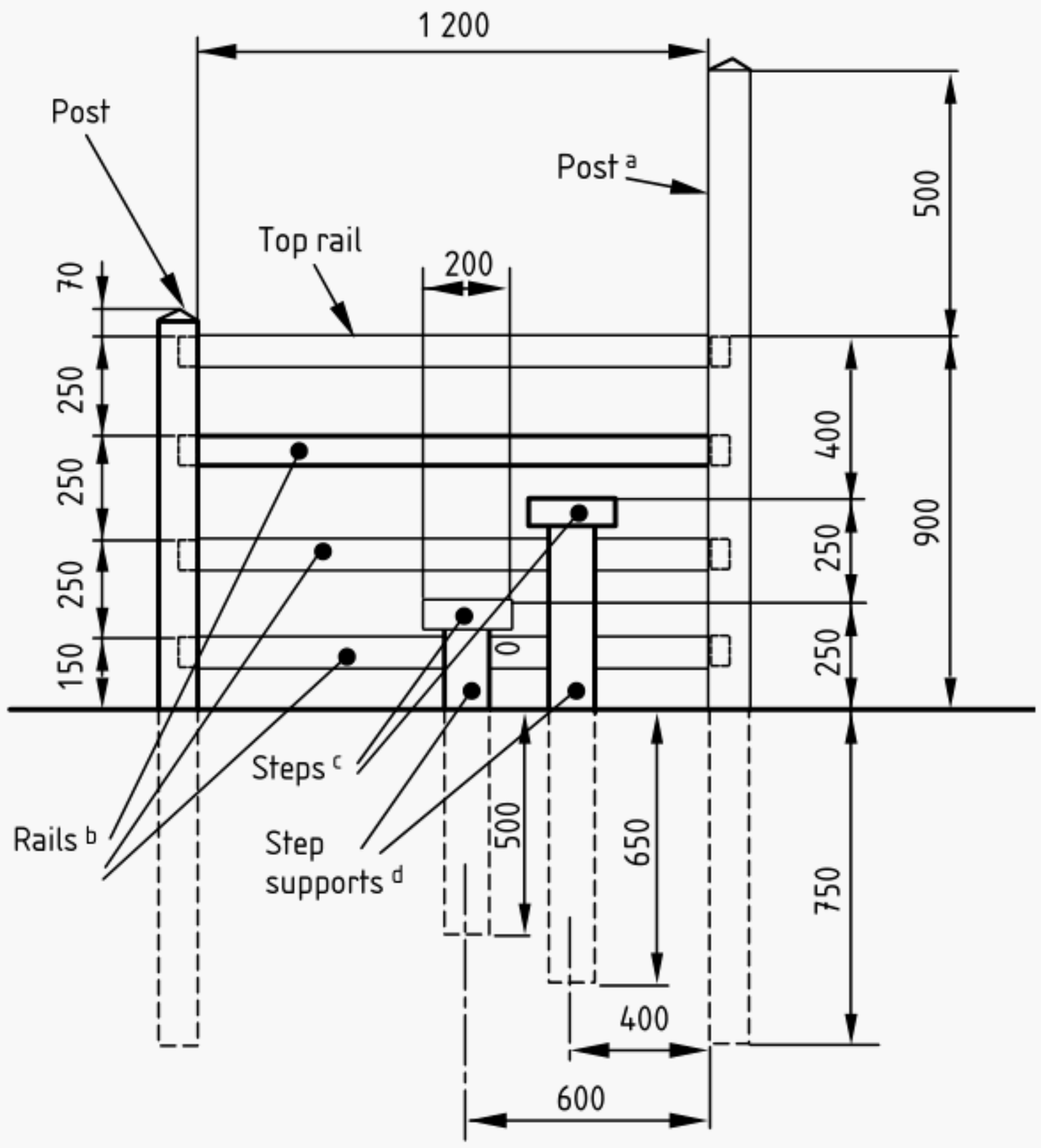

This example is illustrative of one design of a wide stile for which dimensional and other requirements are specified in **4.1**, **4.5.1** and **4.5.2**.

Possible variations.

— Maximum height top rail 1 050 mm with rails at 150, 250, 300 and 350 mm intervals and step heights of 300 mm and 600 mm (giving stepover height of 450 mm). Step supports 1 200 mm and 750 mm long.

— The tall post, instead of being extended, can have handhold pole, rounded to a minimum of 50 mm diameter, securely bolted to the stile post.

— Steps can be crossover at 45° to stile but this may be awkward going one-way if holding onto the post or handpole.

NOTE See also Annex A for information on materials.

[a] Posts: 100 mm × 100 mm, 4 ways weathered and embedded to a minimum of 750 mm in the ground.
[b] Rails: 75 mm (vertical) × 50 mm (horizontal), stub morticed into posts.
[c] Steps: 900 mm × 200 mm × 50 mm, drilled and skew-nailed with 125 mm nails.
[d] Step supports: 150 mm × 75 mm × 1 100 mm (top step) or 700 mm (bottom step) (for minimum height stile).

Figure 8 — Example of a wide post and rail stile

Licensed copy: Vocational Training Council, Version correct as of 18/03/2017

4.5.3 *Narrow post and rail stiles*

NOTE 1 This type of stile is normally used by stepping over without swinging a leg sideways.

In addition to the requirements of **4.1** and **4.5.1**, narrow two post and rail stiles shall conform to the following requirements (see example in Figure 9).

a) The distance between the top of the top step and the top of the top rail shall be a maximum of 300 mm.

b) The width of the stile measured along the top rail shall be between 600 mm and 700 mm between the stile posts.

c) Where the stile is required to be stockproof the height of the top rail from the ground (measured at the side of the steps) shall be between 800 mm and 900 mm.

NOTE 2 For the stile to be stockproof some infilling may be required, for example 300 mm gaps between rails may be used for cattle, 150 mm for sheep, or sheep netting may be installed.

d) Either two stile posts shall be provided extending above the top rail by between 500 mm and 700 mm or hand hold poles shall be attached securely to the stile posts, extending the same distance. For stone stiles and stiles in which the top rail is a flat surface at least 300 mm wide, two stile posts shall be provided extending above the top rail by between 800 mm and 1 000 mm.

e) For all stiles, except for stiles of cantilevered stone and similar material [see f)], the length of step shall be 1 000 mm min. Steps shall be crossed over at 45° ± 10° to the fence line (or stile rails). Steps shall be centred between the posts within 30 mm.

f) For stiles of cantilevered stone and similar material the length of each step shall be at least 300 mm from the cantilever face. At least 200 mm of each step viewed in plan shall be visible and within the width of the top rail (or equivalent structure).

Dimensions in millimetres

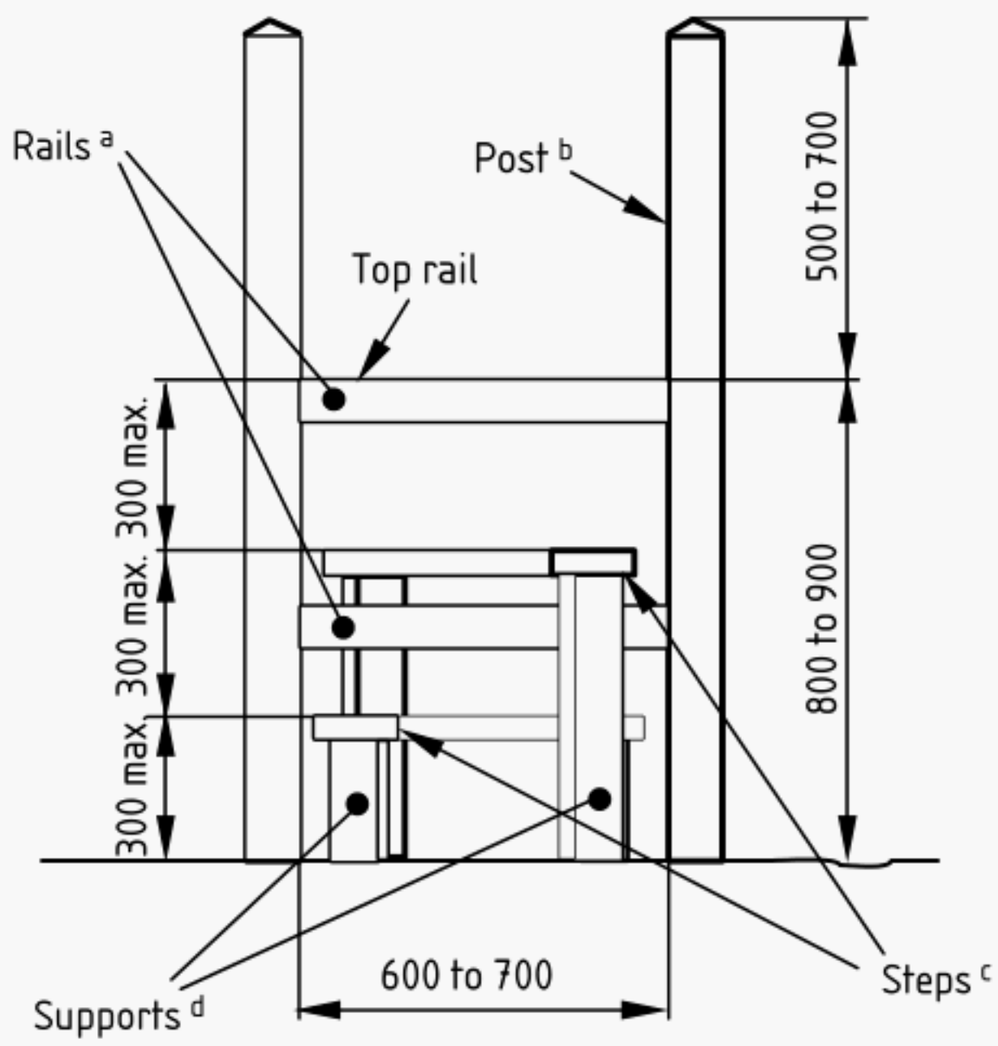

This example is illustrative of one design of a narrow stile for which dimensional and other requirements are specified in **4.1**, **4.5.1** and **4.5.3**.

NOTE See also Annex A for information on materials.

Typical construction.

[a] Rails: bolted to posts with 8 mm galvanized bolts and the nut recessed into a counterbore. Or rails morticed to post. Rail section: 100 mm × 38 mm, top rail chamfered and smoothed all edges.

[b] Posts: 100 mm square set 750 mm into ground (or depth to suit ground conditions). The edges of the posts above the top rail rounded off.

[c] Steps: 1 100 mm long (min. 1 000 mm) × 250 mm wide (min. 200 mm) × 50 mm nominal thickness drilled and skew nailed to each 150 mm × 75 mm support with three 125 mm × 4 mm galvanized nails.

[d] Supports: 500 mm and 650 mm into ground (or depth to suit ground conditions) for low and high step respectively.

Figure 9 — Example of a narrow post and rail stile

© BSI 06-2001

Licensed copy: Vocational Training Council, Vocational Training Council, Version correct as of 18/03/2017

Dimensions in millimetres

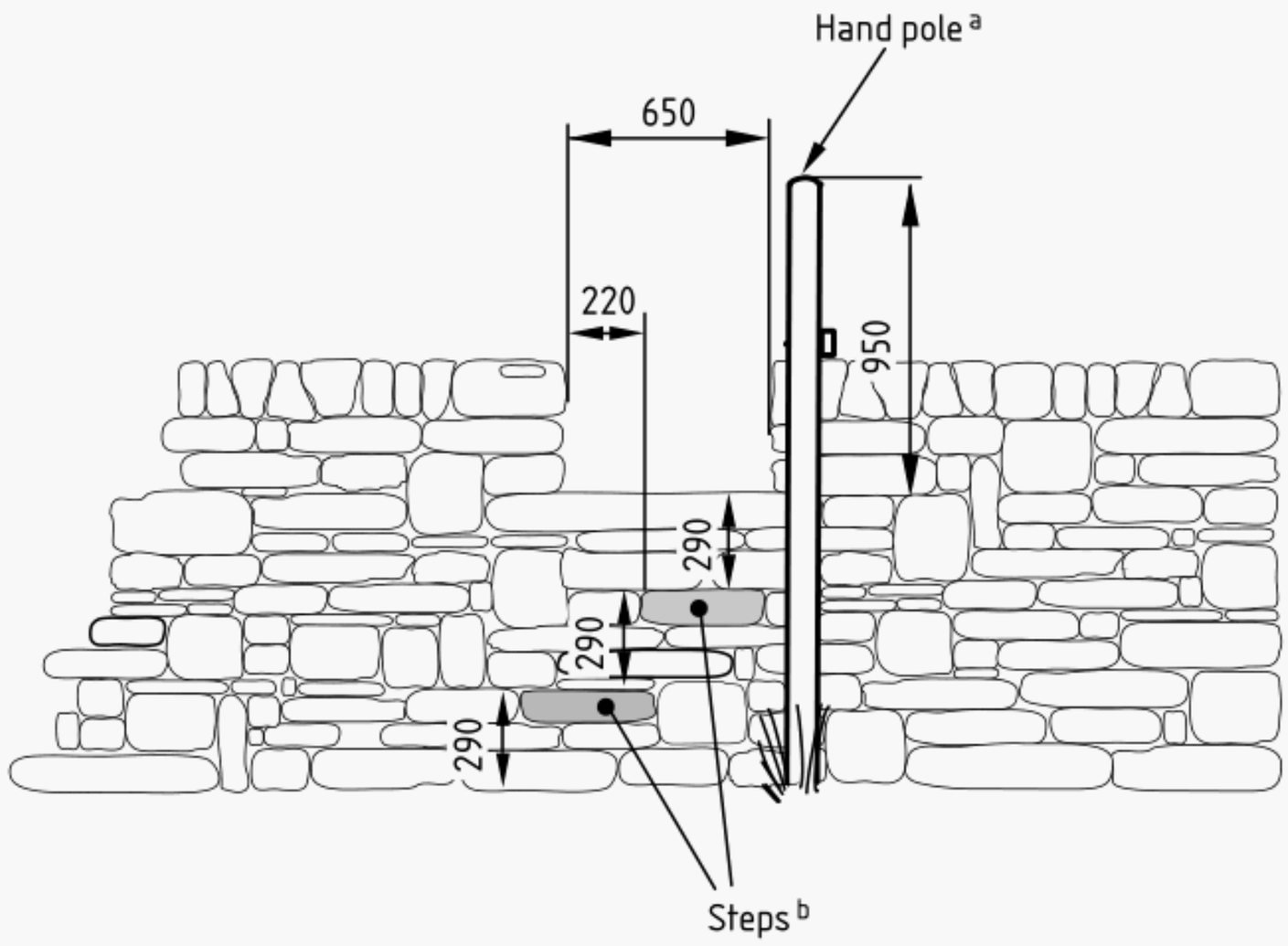

This example is illustrative of one design of a stile for which dimensional and other requirements are specified in **4.1**, **4.5.1** and **4.5.3**.

[a] Two hand-poles, one on each side, are joined by bolted crosspiece for rigidity.
[b] Steps protrude a minimum of 300 mm from the wall.

Figure 10 — Example of a stone stile

4.5.4 *Two bar horse stiles*

NOTE 1 A horse stile can be used on paths where there is a proven need to deter use by motorcycles.

NOTE 2 A horse stile does not prevent the passage of livestock.

In addition to the requirements of **4.1**, two bar horse stiles shall conform to the following requirements (see example in Figure 11).

a) Two bars shall be installed on the ground across the path with a space between them and with no gap between the ground and the bars. A side fence or rail shall also be provided to prevent bypassing the structure. The height of the top of the bars above ground shall be 190 ± 60 mm.

b) The thickness of the bars on the ground shall be between 80 mm and 160 mm.

c) The minimum width of the bars across the path shall be 1 525 mm.

d) The distance between the centre lines of the bars on the ground shall be 1 200 ± 100 mm.

e) A clear manoeuvring space 4 m high, 3 m long and at least 2 m wide shall be provided immediately before and after the horse stile.

f) The space between the bars shall be free draining.

g) Access for other users shall be provided to the side of the horse stile, for example a kissing gate with RADAR lock facility.

h) Manoeuvring space shall be provided to allow the horse to walk straight through the structure. No gates shall need to be opened whilst walking through.

NOTE 3 In order not to startle horses, the bars should be constructed of a material that does not make a sudden ring or noise when struck by horses' hooves.

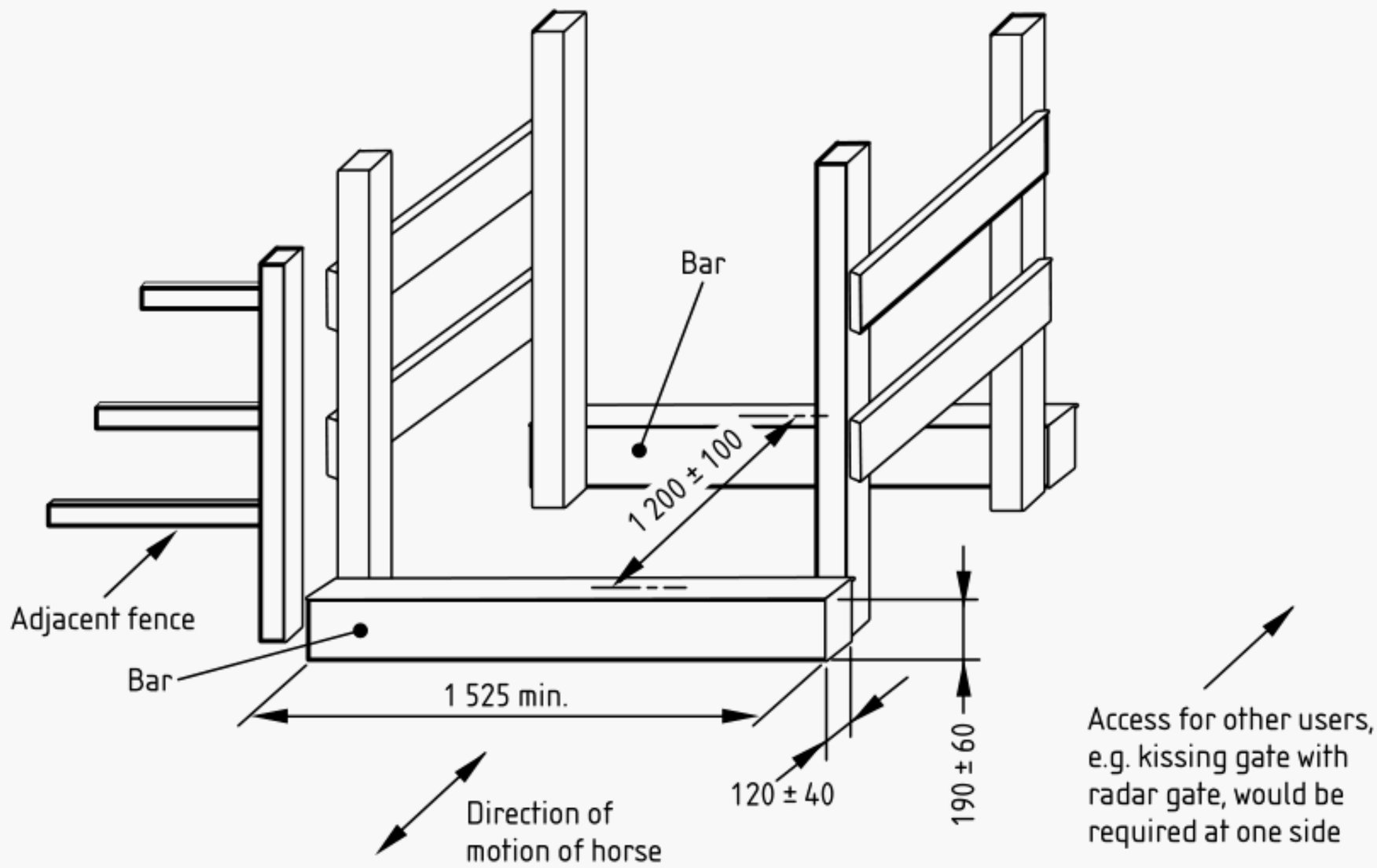

This example is illustrative of one design of a horse stile for which dimensional and other requirements are specified in **4.1** and **4.5.4**.

Figure 11 — Example of a horse stile

4.6 Dog gates

Dog gates shall conform to the following requirements in addition to those of **4.1** (see example in Figure 12).

a) Dog gate doors shall be of the vertical lift-up door type. Dog gate doors shall not be capable of being lifted out of the structure and shall automatically close after use.

b) The gap when the door is fully open shall be a minimum of 300 mm in width and a minimum of 375 mm in height.

c) When the door is in the closed position, a gap no greater than 75 mm shall exist between the gate and the side posts.

d) The door shall have a lower edge of at least 50 mm thick by 100 mm wide.

e) The mass of the door shall be a maximum of 3.5 kg.

f) A handle shall be attached to the door. It shall be visible and not obstruct the use of any adjacent stile or gate and shall allow operation from both sides of the structure.

g) When shut, the door shall be not less than 25 mm or more than 50 mm from the ground.

Licensed copy: Vocational Training Council, Vocational Training Council, Version correct as of 18/03/2017

© BSI 06-2001

Licensed copy: Vocational Training Council, Version correct as of 18/03/2017

Dimensions in millimetres

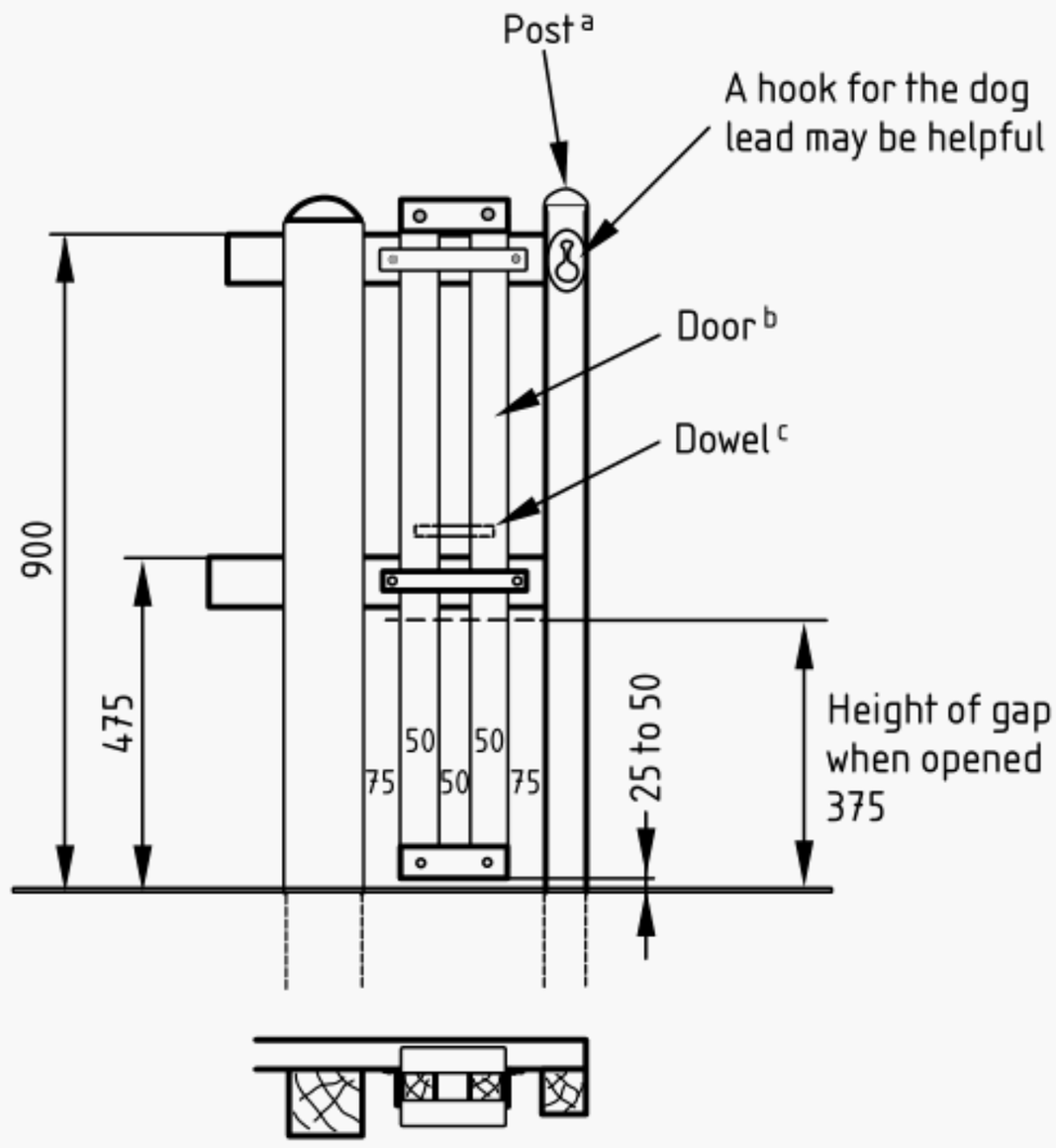

This example is illustrative of one design of a dog gate for which dimensional and other requirements are specified in **4.1**, **4.5.1** and **4.6**.

[a] Post of 75 mm × 75 mm.

[b] Door of bolted 50 mm × 50 mm frame, uprights 925 mm and crosspieces 150 mm. Top crosspiece holds door when not in use. Lower crosspiece rises to touch one of two metal straps, bent to allow free up and down movement of door.

[c] Dowel of 20 mm diameter near mid level facilitates lifting of the door while retaining the dog's lead. Alternatively a dowel can be put through the top of the door.

Figure 12 — Example of a dog gate attached to a timber post and rail stile

Annex A (informative)
Materials

This standard is based on a performance based approach and does not include any requirements for materials to be used. However, the following standards contain detailed provisions for materials for use for fences that may also be suitable for gates and stiles.

a) Concrete components of steel-reinforced concrete conforming to BS 1722-5:1999, annex A.

b) Timber components of sawn timber conforming to BS 1722-5:1999, annex B.

c) Welded steel tube conforming to BS EN ISO 1461 and BS EN 10240.

Licensed copy: Vocational Training Council, Vocational Training Council, Version correct as of 18/03/2017

© BSI 06-2001

Bibliography

Standards publications

BS 1722-5:1999, *Fences — Part 5: Specification for close-boarded fences and wooden palisade fences.*

BS EN 10240:1998, *Internal and/or external protective coatings for steel tubes — Specification for hot dip galvanized coatings applied in automatic plants.*

BS EN ISO 1461:1999, *Hot dip galvanized coatings on fabricated iron and steel articles — Specifications and test methods.*

Other documents

[1] GREAT BRITAIN. Highways Act 1980. London: The Stationery Office.

[2] GREAT BRITAIN. Disability Discrimination Act 1995. London: The Stationery Office.

[3] GREAT BRITAIN. Countryside and Rights of Way Act 2000. London: The Stationery Office.

[4] GREAT BRITAIN. S.I. 1988 No. 2268 Road traffic — The Use of Invalid Carriages on Highways Regulations 1988. London: The Stationery Office.

[5] GREAT BRITAIN. Countryside Act 1968. London: The Stationery Office.

[6] COUNTRYSIDE COMMISSION. *Waymarking public rights of way,* CCP246, 1992. Countryside Agency.[1)]

[1)] Available from Countryside Agency Publications, PO Box 125, Wetherby, West Yorkshire, LS23 7EP.

© BSI 06-2001

Licensed copy: Vocational Training Council, Vocational Training Council, Version correct as of 18/03/2017

BSI — British Standards Institution

BSI is the independent national body responsible for preparing British Standards. It presents the UK view on standards in Europe and at the international level. It is incorporated by Royal Charter.

Revisions

British Standards are updated by amendment or revision. Users of British Standards should make sure that they possess the latest amendments or editions.

It is the constant aim of BSI to improve the quality of our products and services. We would be grateful if anyone finding an inaccuracy or ambiguity while using this British Standard would inform the Secretary of the technical committee responsible, the identity of which can be found on the inside front cover. Tel: 020 8996 9000. Fax: 020 8996 7400.

BSI offers members an individual updating service called PLUS which ensures that subscribers automatically receive the latest editions of standards.

Buying standards

Orders for all BSI, international and foreign standards publications should be addressed to Customer Services. Tel: 020 8996 9001. Fax: 020 8996 7001. Standards are also available from the BSI website at http://www.bsi-global.com.

In response to orders for international standards, it is BSI policy to supply the BSI implementation of those that have been published as British Standards, unless otherwise requested.

Information on standards

BSI provides a wide range of information on national, European and international standards through its Library and its Technical Help to Exporters Service. Various BSI electronic information services are also available which give details on all its products and services. Contact the Information Centre. Tel: 020 8996 7111. Fax: 020 8996 7048.

Subscribing members of BSI are kept up to date with standards developments and receive substantial discounts on the purchase price of standards. For details of these and other benefits contact Membership Administration. Tel: 020 8996 7002. Fax: 020 8996 7001. Further information about BSI is available on the BSI website at http://www.bsi-global.com.

Copyright

Copyright subsists in all BSI publications. BSI also holds the copyright, in the UK, of the publications of the international standardization bodies. Except as permitted under the Copyright, Designs and Patents Act 1988 no extract may be reproduced, stored in a retrieval system or transmitted in any form or by any means – electronic, photocopying, recording or otherwise – without prior written permission from BSI.

This does not preclude the free use, in the course of implementing the standard, of necessary details such as symbols, and size, type or grade designations. If these details are to be used for any other purpose than implementation then the prior written permission of BSI must be obtained.

If permission is granted, the terms may include royalty payments or a licensing agreement. Details and advice can be obtained from the Copyright Manager. Tel: 020 8996 7070.

BSI

389 Chiswick High Road

London

W4 4AL

Licensed copy: Vocational Training Council, Vocational Training Council, Version correct as of 18/03/2017