BRITISH STANDARD

BS 6043-1-1:2002
ISO 6257:2002

Methods of sampling and test for carbonaceous materials used in aluminium manufacture —

Part 1: Electrode pitch — Section 1.1: Sampling

ICS 71.100.10

NO COPYING WITHOUT BSI PERMISSION EXCEPT AS PERMITTED BY COPYRIGHT LAW

British Standards

National foreword

This British Standard reproduces verbatim ISO 6257:2002 and implements it as the UK national standard. It supersedes BS 6043-1-1:1981 which is withdrawn.

The UK participation in its preparation was entrusted to Technical Committee CII/24, Raw materials for the aluminium industry, which has the responsibility to:

- aid enquirers to understand the text;
- present to the responsible international/European committee any enquiries on the interpretation, or proposals for change, and keep the UK interests informed;
- monitor related international and European developments and promulgate them in the UK.

A list of organizations represented on this committee can be obtained on request to its secretary.

Cross-references

The British Standards which implement international publications referred to in this document may be found in the *BSI Catalogue* under the section entitled "International Standards Correspondence Index", or by using the "Search" facility of the *BSI Electronic Catalogue* or of British Standards Online.

This publication does not purport to include all the necessary provisions of a contract. Users are responsible for its correct application.

Compliance with a British Standard does not of itself confer immunity from legal obligations.

This British Standard, having been prepared under the direction of the Materials and Chemicals Sector Policy and Strategy Committee, was published under the authority of the Standards Policy and Strategy Committee on 14 November 2002

Summary of pages

This document comprises a front cover, an inside front cover, the ISO title page, pages ii to v, a blank page, pages 1 to 21 and a back cover.

The BSI copyright date displayed in this document indicates when the document was last issued.

Amendments issued since publication

Amd. No.	Date	Comments

© BSI 14 November 2002

ISBN 0 580 40737 3

INTERNATIONAL STANDARD

ISO 6257

Second edition
2002-10-01

Carbonaceous materials used in the production of aluminium — Pitch for electrodes — Sampling

Produits carbonés utilisés pour la production de l'aluminium — Brais pour électrodes — Échantillonnage

Reference number
ISO 6257:2002(E)

Contents

Page

1 Scope **1**
2 Normative references **1**
3 Terms and definitions **1**
4 General procedures and precautions **3**
5 Sampling of solid pitch **5**
6 Soft pitches **9**
7 Hot liquid pitch **10**
8 Sample size reduction **17**
9 Sample containers **19**
10 Sampling report **19**
Bibliography **21**

Foreword

ISO (the International Organization for Standardization) is a worldwide federation of national standards bodies (ISO member bodies). The work of preparing International Standards is normally carried out through ISO technical committees. Each member body interested in a subject for which a technical committee has been established has the right to be represented on that committee. International organizations, governmental and non-governmental, in liaison with ISO, also take part in the work. ISO collaborates closely with the International Electrotechnical Commission (IEC) on all matters of electrotechnical standardization.

International Standards are drafted in accordance with the rules given in the ISO/IEC Directives, Part 3.

Draft International Standards adopted by the technical committees are circulated to the member bodies for voting. Publication as an International Standard requires approval by at least 75 % of the member bodies casting a vote.

Attention is drawn to the possibility that some of the elements of this International Standard may be the subject of patent rights. ISO shall not be held responsible for identifying any or all such patent rights.

International Standard ISO 6257 was prepared by Technical Committee ISO/TC 47, *Chemistry*, Subcommittee SC 7, *Aluminium oxide, cryolite, aluminium fluoride, sodium fluoride, carbonaceous products for the aluminium industry*.

This second edition cancels and replaces the first edition (ISO 6257:1980), which has been technically revised.

Introduction

Sampling is a vital step in analysis and testing. Its importance is recognized in this International Standard which specifies comprehensive methods of sampling the grades of pitch used for the electrolytic production of aluminium.

Such samples should be as representative as possible of the materials sampled (whether from the whole or part of a batch or consignment) and in a form that facilitates the determination of the distribution of values of properties.

Carbonaceous materials used in the production of aluminium — Pitch for electrodes — Sampling

WARNING — This International Standard may involve the use of hazardous materials, operations and equipment. This International Standard cannot address all the safety implications associated with its use. It is the responsibility of the user of this International Standard to establish appropriate health and safety practices and assess the applicability of regulatory limitations prior to use.

1 Scope

This International Standard specifies methods for sampling and preparing samples prior to testing of binder pitch used in the manufacture of electrodes for the electrolytic production of aluminium.

These methods are applicable to grades of pitch in liquid or solid form, the latter having softening points higher than 30 °C (determined according to the method specified in ISO 5940), in bulk, or in a number of containers making up one batch at sites of manufacture, storage, or delivery. Sampling methods and sampling plans for large consignments, or lots, of pitch in liquid form during the loading and unloading of ships are included.

2 Normative references

The following normative documents contain provisions which, through reference in this text, constitute provisions of this International Standard. For dated references, subsequent amendments to, or revisions of, any of these publications do not apply. However, parties to agreements based on this International Standard are encouraged to investigate the possibility of applying the most recent editions of the normative documents indicated below. For undated references, the latest edition of the normative document referred to applies. Members of ISO and IEC maintain registers of currently valid International Standards.

ISO 3165, *Sampling of chemical products for industrial use — Safety in sampling*

ISO 5940, *Carbonaceous materials for the production of aluminium — Pitch for electrodes — Determination of softening point by the ring-and-ball method*

3 Terms and definitions

For the purposes of this International Standard, the following terms and definitions apply.

3.1
sampling unit
defined quantity of material having a boundary which may be physical, for example a container, or hypothetical, for example a particular time or time interval in the case of a stream of material

NOTE 1 A number of sampling units may be gathered together, for example in a package or box.

NOTE 2 In French, the term “individu” is sometimes used, a synonym of “unité d'échantillonnage”. In English, the terms “individual”, “unit” and “item” are sometimes used in practice as synonyms of “sampling unit”.

[ISO 6206]

3.2
sample
one or more sampling units taken from a larger number of sampling units, or one or more increments taken from a sampling unit

[ISO 6206]

3.3
representative sample
sample assumed to have the same composition as the material sampled when the latter is considered as homogeneous whole

[ISO 6206]

3.4
sampling plan
planned procedure of selection, withdrawal and preparation of a sample or samples from a lot (see 3.6) to yield the required knowledge of the characteristic(s) from the final sample (see 3.10) so that a decision can be made regarding the lot

NOTE Considerations of cost, effort and delay usually determine an acceptable sampling error.

[ISO 6206]

3.5
consignment
quantity of material covered by a particular consignment note or shipping document

[ISO 6206]

3.6
lot
total quantity of material to be sampled using a particular sampling plan

NOTE A lot may consist of consignments, batches or items.

[ISO 6206]

3.7
batch
definite quantity of material that may be one item or a number of items which belong together because of their manufacture or production under conditions which are presumed to be uniform

[ISO 6206]

3.8
bulk sample
collected set of samples which do not maintain their individual identity

[ISO 6206]

3.9
incremental sample
one of a series of samples taken during the sampling process

NOTE Incremental samples may or may not retain their individual identity depending on the sampling instructions.

3.10
final sample
sample obtained or prepared under the sampling plan for possible subdivision into identical portions for testing reference or storage

[ISO 6206]

3.11
laboratory sample
sample as prepared for sending to the laboratory and intended for inspection or testing

[ISO 6206]

3.12
reference sample
sample prepared at the same time as, and identical with, the laboratory sample, which is acceptable to the parties concerned and retained for use as a laboratory sample if a disagreement occurs

[ISO 6206]

3.13
spot sample
sample of specified number or size taken from a specified place in the material or at a specified place and time in a stream of material and representative of its own immediate or local environment

NOTE In English, the term “snap sample” is sometimes used as a synonym for “spot sample”.

[ISO 6206]

4 General procedures and precautions

4.1 Sampling methods

Manual and automated sample-taking are equally acceptable. Details of the methods employed shall be described in the sampling report (see clause 10).

4.2 Contamination of sample or of pitch being sampled

The sampling procedure shall not cause contamination of the sample or of the pitch being sampled.

Sample containers, sampling apparatus and any ancillary gear shall be dry.

Sample containers, sampling apparatus, any ancillary gear, the hands and gloves and the protective clothing of the sampler shall be clean.

Pitch undergoes slow surface oxidation in the presence of air. Finely divided products, because of their large surface area per unit mass, may show a significant rise in softening point even if stored for only a short time. It is recommended therefore that finely divided reference samples be prepared for storage by melting and resolidifying as follows.

a) Place a sufficient amount of the powdered sample in a suitable container with a loose-fitting lid in an oven controlled at approximately 50 °C above the expected softening point of the pitch. Leave in the oven for 2 h at this temperature. After heating, the surface of the melt should be smooth, shiny and free of skin.

b) If the surface of the melt is covered with froth, suggesting the presence of water, discard it and prepare another melt using a further portion of the sample which has first been dried by allowing it to stand in an evacuated desiccator in the presence of a suitable desiccant for approximately 2 h.

c) Pour the molten pitch without turbulence, so as to avoid entrapping air bubbles, into an air-tight metal container, allowing it to solidify and seal the container.

d) Note any froth formation during melting in the sample report and, in such cases; retain a separate portion of the finely-divided sample, stored in a sealed air-tight container, for the determination of water content.

If a sample container is opened, it shall be securely closed again as soon as possible and any damaged sealing rings shall be replaced.

4.3 Sampling for the determination of water content of pitch in solid form

For bulk shipments of solid pitch, a series of spot samples shall be taken for determination of water content, either from the conveying system during charge or discharge, or from the hold or compartment, or lorry at the top, middle or bottom during charge or discharge. The individual samples shall be sealed immediately in air-tight containers and tested promptly to avoid loss of moisture.

4.4 Mass of laboratory and reference samples

The mass of the laboratory and reference samples shall be at least three times the amount required for testing and shall never be less than 1 kg unless otherwise agreed in accordance with an established quality procedure. The sample mass shall be included in the sampling report (see clause 10).

The minimum recommended sample mass is 2 kg.

4.5 Safety precautions

Comprehensive safety instructions are given in ISO 3165. Attention is drawn in particular to the following.

— When sampling hot liquid pitch from large containers such as ships, road or rail tanks, the sampler shall closely follow the safety procedures laid down for that site or location. These procedures typically include protective equipment and guidelines on safe working practice.

— Avoid inhalation of pitch vapour and dust.

— Sampling from ships, road or rail vehicles shall be strongly discouraged when in motion or when motion is likely to begin.

4.6 Suspect consignment

A consignment shall be considered suspect if:

a) a container is damaged or defective;

b) there is any doubt as to the nature of the contents of a container, for example because of the presence of an old label or incorrect markings;

c) there is evidence of an unexpected lack of uniformity;

d) there are obvious and unusual variations observed in the consignment.

Such samples shall be fully reported and shall not be regarded as acceptable without mutual agreement between the parties concerned.

NOTE As pitch is a supercooled liquid, some advantage is gained during crushing the sample and cleaning of apparatus by pre-refrigerating the sample.

Any work applied to the sample (e.g. punning) results in heat generation, caking and consequent segregation of the sample.

Preparation of low softening point pitches is also possible under cryogenic conditions.

5 Sampling of solid pitch

5.1 General considerations

Table 1 indicates the minimum amount of representative sample that shall be withdrawn initially from a container or bulk as a series of incremental samples (see 4.4) unless the quantity to be sampled is very large (see 5.2).

Table 1 — Minimum representative sample size

Material mass tonnes	Representative sample mass kg
1 to 10	10
10 to 50	15
50 to 100	20

Each incremental sample taken shall have a minimum mass of approximately 1 kg and a preferred mass of 2 kg unless otherwise agreed in accordance with an established quality procedure. Large sampling errors may arise if the material being sampled is inhomogeneous and under such circumstances, it will be necessary to increase the sample size.

Special considerations will also apply if the quantity to be sampled is small (approximately 1 t or less) or very large (approximately 1 000 t or more).

If the quantity of material to be sampled is more than approximately 1 t but less than approximately 100 t, then no fewer than 10 samples shall be taken to allow for the heterogeneity of the material. Refer to Table 1. The mass of each sample taken from quantities of 1 t to 100 t approximately shall be between 0,5 kg and 1 kg, but shall be at least 20 times the mass of the largest particle.

In the case of large quantities not in containers, several 10 kg samples shall be taken. The procedure specified in 5.2.2 shall be used to determine the number of incremental samples that shall be taken to form the representative sample.

5.2 Sampling plan for large quantities of solid pitch

5.2.1 Large quantities of solid pitch in containers

The minimum number of items to be sampled is given in Table 2.

5.2.2 Consignment of solid pitch not in containers

Use Figure 1 to determine the number of 10 kg incremental samples required to represent the lot or consignment.

5.3 Practical procedures for taking samples of solid pitch

5.3.1 Coarse pitch (including pencil, rod, plate and similar-formed pitch)

5.3.1.1 General considerations

This type of material is likely to show the greatest variation of composition within its container. Particular care shall therefore be taken in obtaining a representative sample. Larger samples are necessary for materials of large particle size or size range. A suitably sized scoop may be used for sampling, preferably of width at least six times the diameter of the largest particles. An open-ended or closed-end sampling spear (see Figures 2 and 3) may be used as alternative sampling tools.

Table 2 — Minimum number of items to be sampled

Number of items in the lot	Minimum number of items to be sampled
1 to 10	All the items
11 to 49	11
50 to 64	12
65 to 81	13
82 to 101	14
102 to 125	15
126 to 151	16
152 to 181	17
182 to 216	18
217 to 254	19
255 to 296	20
297 to 343	21
344 to 394	22
395 to 450	23
451 to 512	24

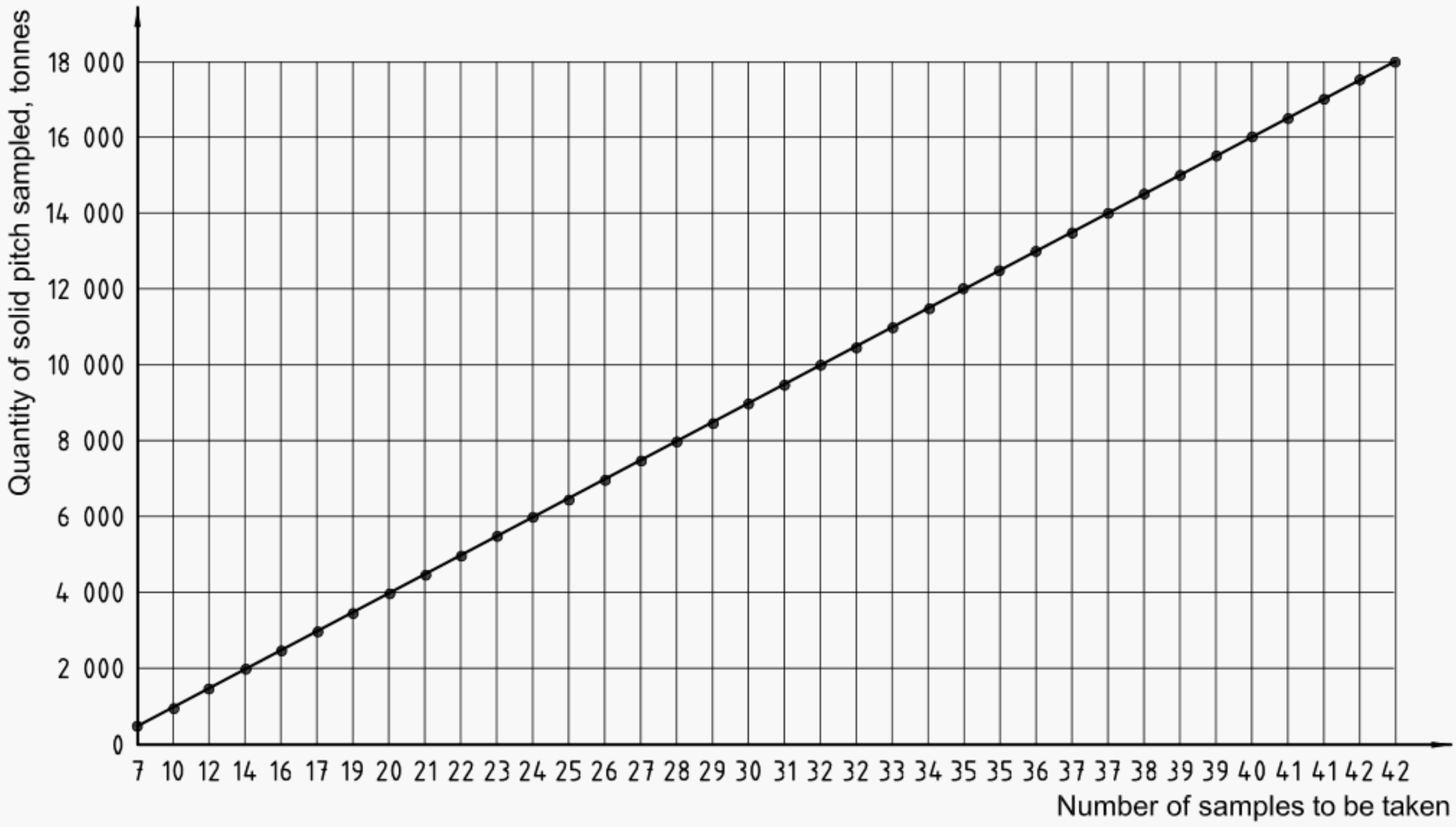

Figure 1 — Number of samples to be taken as a function of the quantity of solid pitch sampled

Sample size reduction shall be effected by means of a riffle (8.2.1) or the coning and quartering method (8.2.2) after first breaking down the lumps in the final sample. A punner, see Figure 4, may be used to break down the lumps.

Prepare a laboratory sample from the final sample by use of a riffle (8.2.1) or by means of the coning and quartering method (8.2.2).

Dimensions in millimetres

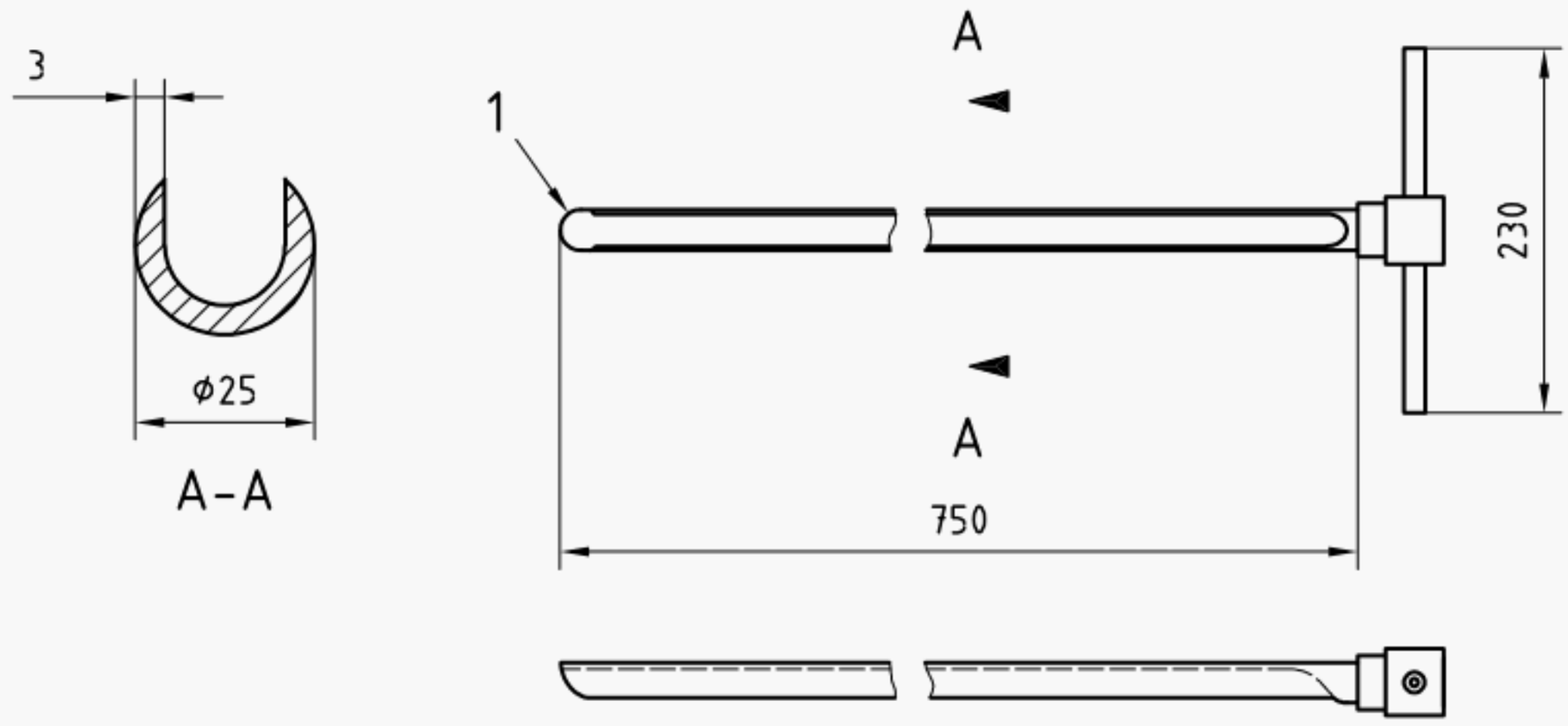

Key

1 Cutting edge, ground

Figure 2 — Open-ended sampling spear — Typical dimensions

Dimensions in millimetres

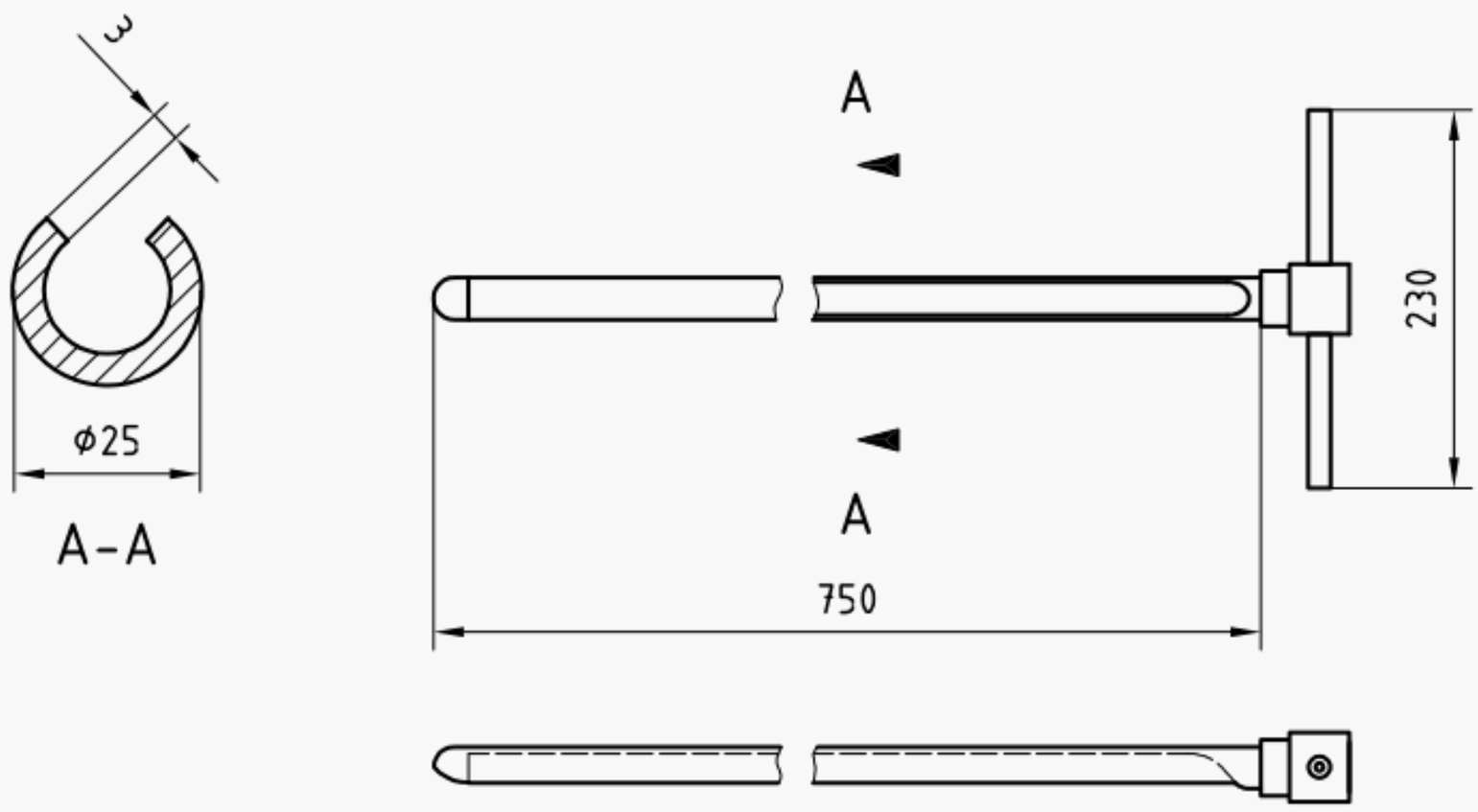

Figure 3 — Closed-end sampling spear — Typical dimensions

5.3.1.2 Small containers

Empty the contents of the container on to a clean surface and abstract from the heap a number of lumps and a quantity of fines roughly representing the particle size distribution of the material.

NOTE The finer particles will remain near the centre of the heap whilst the coarser particles will spread away from the centre and will thus be more easily accessible.

5.3.1.3 Road or rail vehicles

Selectively remove sufficient material from all parts of the vehicle so that it roughly represents the particle size distribution of the material in the vehicle.

NOTE Vibration during transit will tend to segregate the coarser particles to the surface.

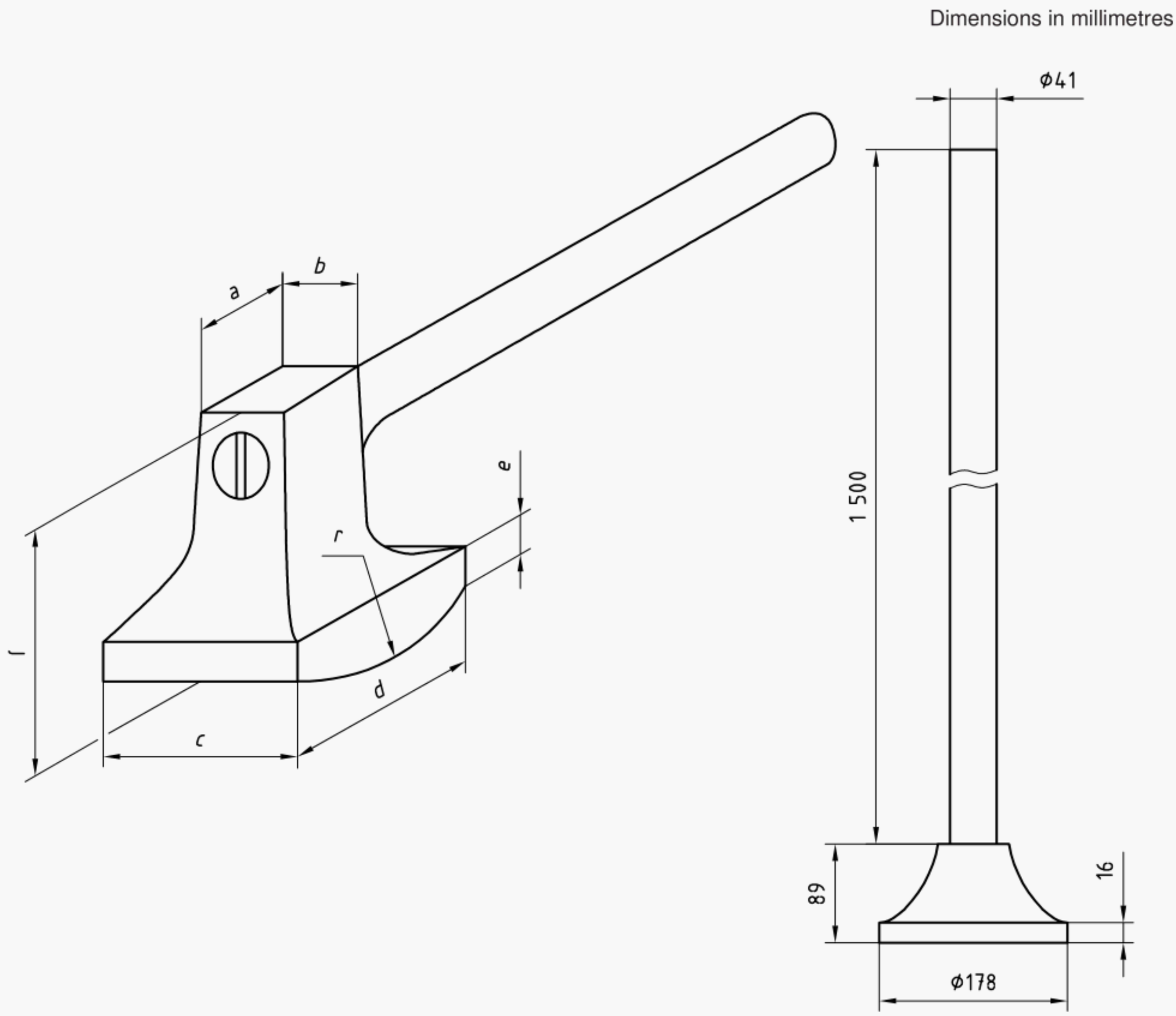

Figure 4 — Typical sample punners

5.3.1.4 Bulk stocks or heaps

Very large bulk stocks (more than 1 000 t) cannot be sampled satisfactorily *in situ*. Sampling should, where practicable, be carried out either as the stocks accumulate or as material is withdrawn.

NOTE Digging into a very large stockpile can cause considerable physical deterioration to the pieces of pitch through breakage.

5.3.1.5 Ships' holds

Sampling shall take place during loading or unloading, so as to avoid sampling only the material at the surface. Material representative of the particle size distribution shall be taken from, for example, the conveying plant at regular intervals during loading or unloading and combined to give the final sample.

5.3.2 Finer, granular pitch (including prill and flake and similarly formed pitch)

5.3.2.1 Method of sampling

Material in this form, generally passing through a 2 mm sieve, shall be sampled by means of a sampling spear (see Figures 2 and 3) as follows.

— Thrust the spear at an angle into the material with its open side underneath and give it two or three turns. With the open side uppermost, withdraw the spear carefully so that it remains filled with the material and empty the contents into the sample container.

— Prepare a laboratory sample from the final sample by use of a riffle (8.2.1) or by means of the coning and quartering method (8.2.2).

5.3.2.2 Bulk stocks or heaps

Flatten the bulk as far as is practicable and take samples with the spear at numerous points so as to obtain as representative a sample as possible. Very large bulk stocks cannot be satisfactorily sampled *in situ*. They shall therefore be sampled either as they accumulate or as material is withdrawn.

5.3.2.3 Bags and sacks

Insert the spear gently at a point where the container may be easily repaired, for example at a corner or top seam. The dimensions of the spear should take into consideration the particle size of the pitch. For example, a spear diameter of three or four times the largest particle size. Remove any fragments of the container from the spear before emptying the contents into the sample container.

5.3.2.4 Casks and kegs

If the top of the container cannot be removed, use a brace and bit to bore holes through which the spear may be inserted. It is advisable to sample one portion from top to bottom and another from side to side and then to combine the two. Remove any fragments of the container from the spear before emptying the contents into the sample container. However, this practice is not recommended because of the risk of causing contamination of the pitch and for operation reasons.

In all cases, seal the container immediately after sampling by driving wooden pegs into the holes.

5.3.3 Pitch stored in drums or barrels

If the container was filled with molten pitch which was allowed to solidify, and if it is impractical to remelt the material for sampling, proceed as follows:

Remove one end of the container and drill two holes. The combined drillings comprise the bulk sample.

6 Soft pitches

Pitches that are too soft at ambient temperatures to allow satisfactory blending shall be sampled by means of one of the following procedures. Method a) is preferred.

a) Melt the pitch and samples as described in 8.3.

b) If melting is impracticable, sample the container by means of an auger of the type shown in Figure 5, or by any other suitable means, taking approximately 1 kg of material from each sampling point. Melt the combined samples in a suitable vessel.

Figure 5 — Typical sample auger

7 Hot liquid pitch

7.1 General

WARNING — Liquid pitch used as a binder in the aluminium industry is usually stored at temperatures in excess of 150 °C**. The sampler shall therefore wear protective clothing, goggles, and heat-resistant gloves and any other equipment laid down for that site or location (see 4.5)**

Each incremental sample taken shall have a minimum mass of approximately 1 kg and a preferred mass of approximately 2 kg. Use one of the methods described in 7.3 to take the samples.

Samples shall be transferred to clean, dry, labelled containers [see sampling report, 10 b)] as soon as possible and shall have loosely fitting covers such as lids or aluminium foil caps to minimize loss of volatile materials and minimize risk of contamination from external sources (see 4.2).

7.2 Sampling plan for large quantities of liquid pitch

Information on a sampling plan for liquid pitch is given in Figure 6.

The sampling plan in Figure 6 and in Table 3 is advisory and not mandatory.

The actual sampling plan used shall be fully described in the sampling report (see clause 10).

Table 3 is extracted from the information contained in Figure 6. The information in Figure 6 takes priority over that in Table 3 for the number samples to be taken from a given tonnage.

If pitch is being sampled during transfer then the samples shall be taken at uniform intervals. The intervals may be defined in terms of time or tonnage throughout the entire pitch transfer process.

7.3 Practical procedures for sampling bulk liquid storage tanks at place of manufacture or despatch or at user's facility

7.3.1 Vertical tanks not capable of being agitated or circulated

7.3.1.1 General

The procedures described in 7.3.1.2 to 7.3.1.5 are applicable to storage tanks from approximately 500 t to 5 000 t capacity.

Samples shall be taken from the upper, middle and lower regions of the tank using a suitable method such as one of those described in 7.3.1.2, 7.3.1.3, 7.3.1.4 or 7.3.1.5.

The sample from the upper region shall be taken from top third of the tank, but a minimum of approximately 0,6 m below the surface of the liquid. The sample from the middle region shall be taken from the middle third of the tank. The sample from the lower region shall be taken from the bottom third of the tank but a minimum of 0,6 m above the bottom of the tank. The bottom of the tank is that level below which liquid pitch cannot be withdrawn and is in part determined by the positioning of suction(s) and by any accumulated solid deposits.

Procedures for further preparation of sample(s) are given in 7.7.

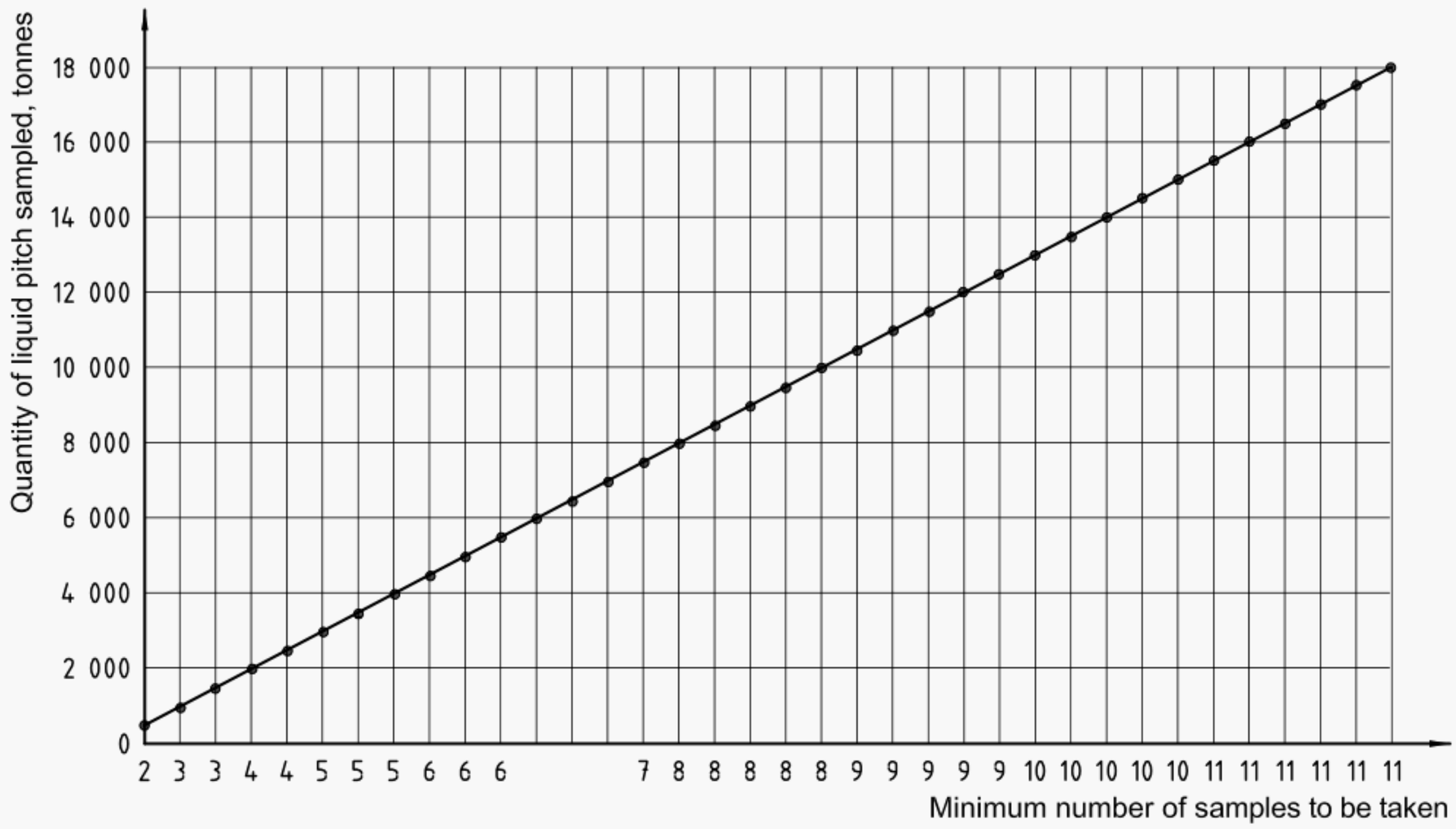

Figure 6 — Number of samples to be taken as a function of the quantity of liquid pitch sampled

Table 3 — Minimum number of samples to be collected

Quantity of liquid pitch to be sampled tonnes	**Minimum number of minimum** 1 kg **samples to be collected**
up to 500	2
501 to 1 500	3
1 501 to 2 500	4
2 501 to 4 000	5
4 001 to 5 500	6
5 501 to 7 500	7
7 501 to 9 500	8

7.3.1.2 Thief sampler method

Samples shall be taken from the upper, middle and lower regions as described in 7.3.1.1 and in accordance with 7.2 by carefully lowering a thief sampler into the material. An example of a thief sampler is given in Figure 7.

Most pitches in a liquid state are of such a viscous and adhesive character that, after normal emptying of a container by pouring, the container retains enough material to cause significant contamination of any subsequent samples secured before the container was thoroughly cleaned. The aforementioned properties also make container cleaning an exacting, tedious and time-consuming task.

The thief sampler illustrated in Figure 7 may be used for repetitive sampling because significant contamination by previous contents is avoided by the self-cleaning action provided by the passage of material through the tube-shaped thief sampler which is open at both ends. This type of sampler is lowered into the tank with the bottom valve open (there is no top closure). Raising and lowering the sampler four or five times through a distance of 1 m to 1,5 m at the sampling depth is recommended. When the thief sampler is at the desired depth, the lowering chain is given a snap (sharp) tug which closes the bottom valve. The sampler is then withdrawn from the tank and the contents transferred to the sample container.

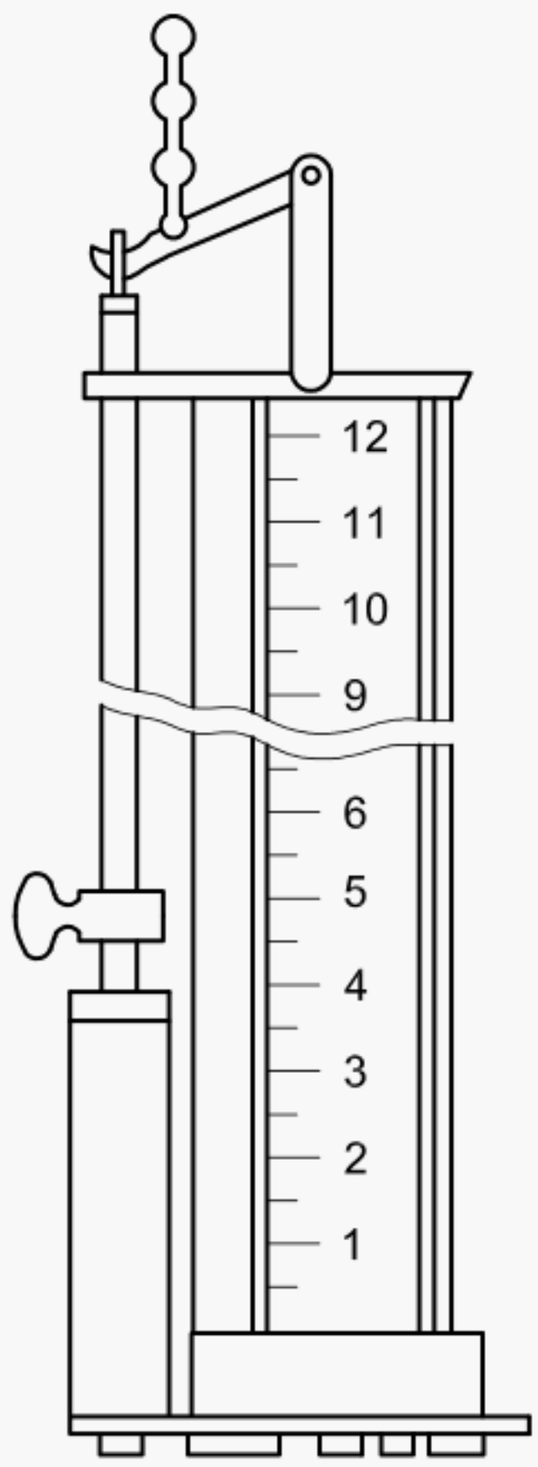

Figure 7 — Thief sampler

7.3.1.3 Weighted can method

A suitable sampling device is illustrated in Figure 8. Samples shall be taken from the upper, middle and lower regions as described in 7.3.1.1 and in accordance with 7.2 by carefully lowering a weighted can into the material. For each sample the stoppered can shall be lowered to the required depth, allowing sufficient time for temperature equilibrium, then removal of the stopper by pulling on the attached chain or line and allowing the can to fill with pitch.

For temperature equilibration of the sampling can and the pitch, 1 min or 2 min should be sufficient.

Carefully remove the can from the storage tank and pour off the upper quarter of the sample to remove most of the liquid collected from higher levels during withdrawal. (See WARNING in 7.1).

Carefully transfer the sample from the can to a clean and dry metal container then protect the sample(s) to minimize volatile materials loss and minimize risk of external sample contamination.

Individual samples may be combined to make a representative sample (see 7.7).

Dimensions in millimetres

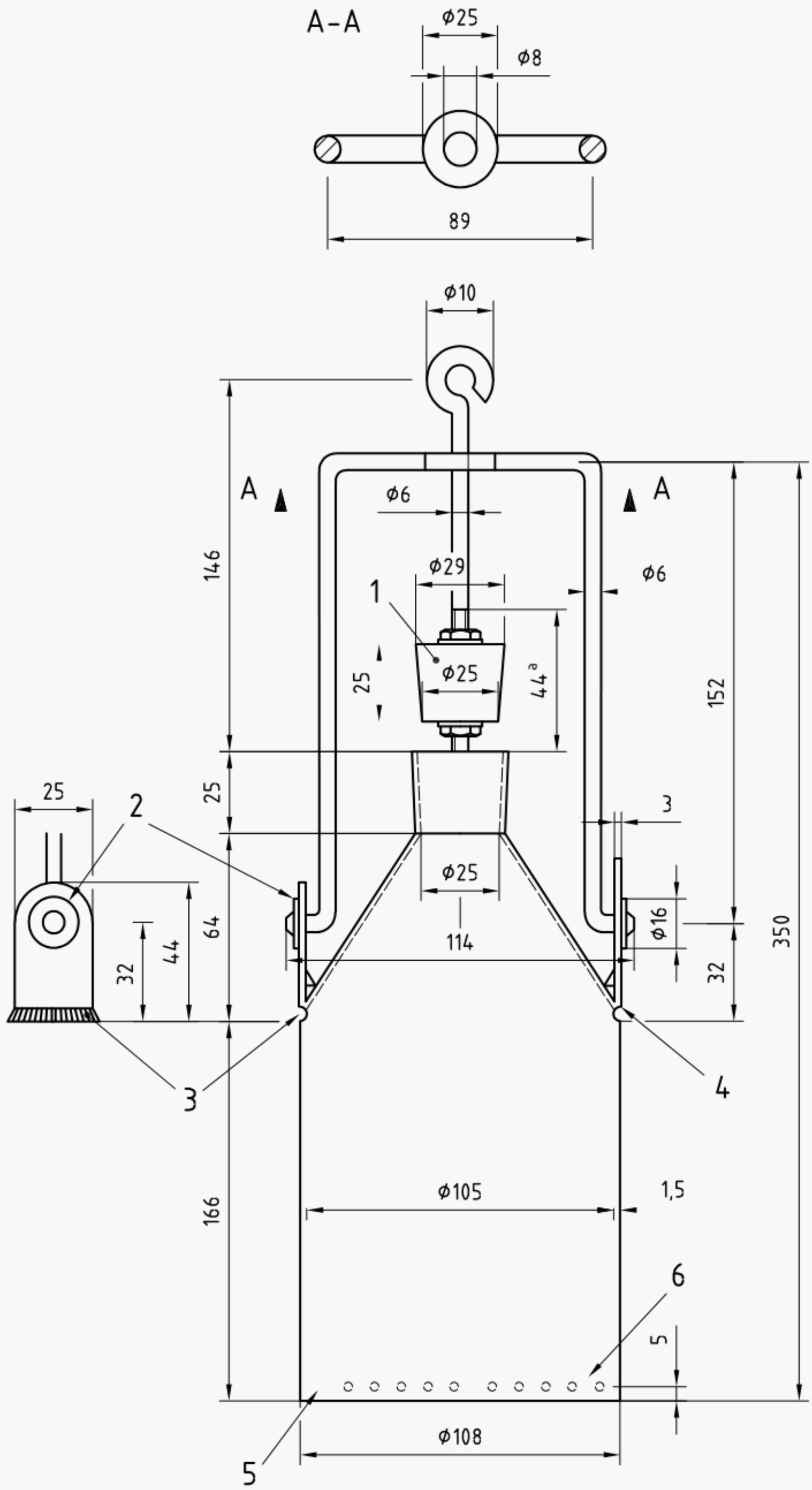

[a] Threaded.

Key

1 Stopper to fill bottle neck

2 Washer welded to rod

3 Hinge plate welded to body

4 Bottom edge of hinge plate curved to fit body

5 Ring of small indentations on inside to retain lead weight

6 Lead added to bring up to 2,5 kg mass

Figure 8 — Typical weighted sampling can

7.3.1.4 Throw-away container method

Samples shall be taken from the upper, middle and lower regions as described in 7.2 by carefully lowering into the pitch a container in a suitable weighted holding device. One type is illustrated in Figure 9.

This type of sampler is lowered into the tank with the stopper in place. When the desired depth is reached, the stopper is removed by means of the attached wire, cord or chain and the container allowed to fill. Complete filling is indicated by the cessation of bubbles of air from the can on the surface of the liquid.

The essential feature is the use of a clean container for each individual sample. Pour the sample(s) into another clean metal container which shall be labelled in accordance with 10 b) of the sampling report for future reference and dispose of the container used to take the sample from the tank.

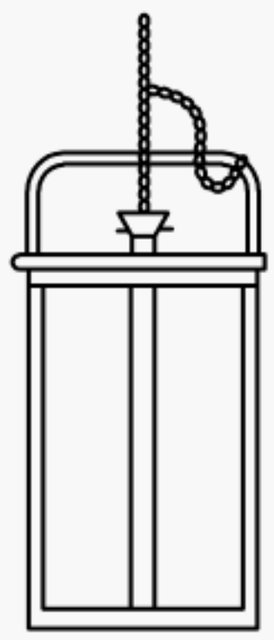

a) Can in weighted holder

b) Stopper detail

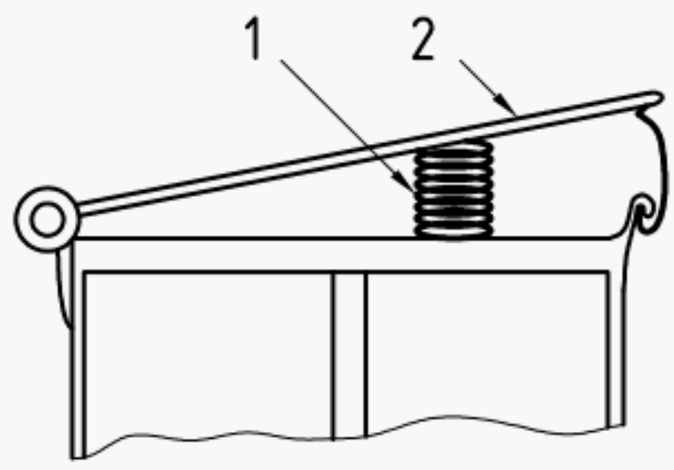

c) Can retainer detail

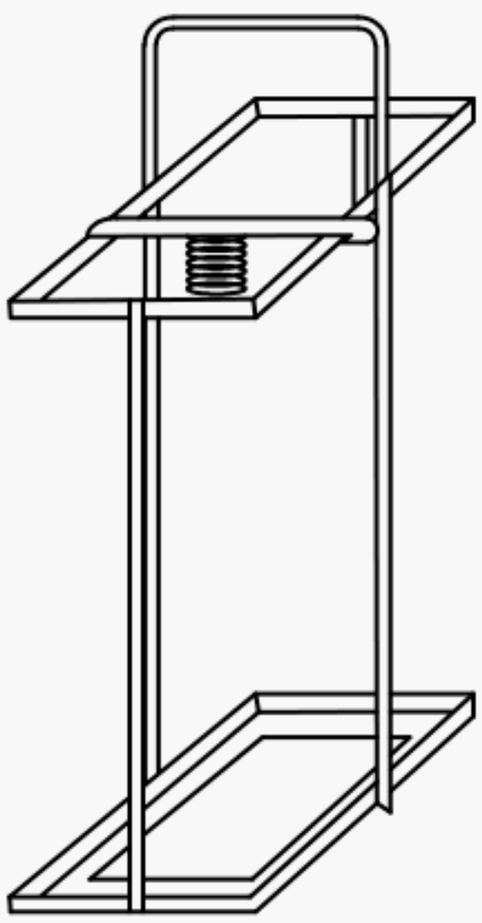

d) Weighted holder

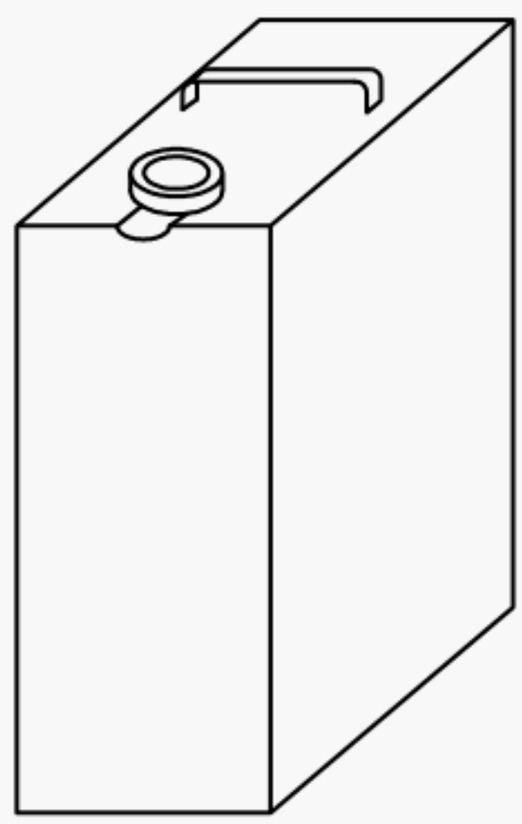

e) Can

Key

1 Retaining spring
2 Latch

Figure 9 — Disposable container sampler

7.3.1.5 Sampling if sample cocks are fitted

Sample cocks, if fitted, should preferably be arranged vertically and ideally 1 m apart, with safe and easy access. Some sample cocks are illustrated in Figures 10 and 11. The double valve arrangement in Figure 10 is preferred. Sample from the cock(s) into a clean container after having first taken and rejected several increments.

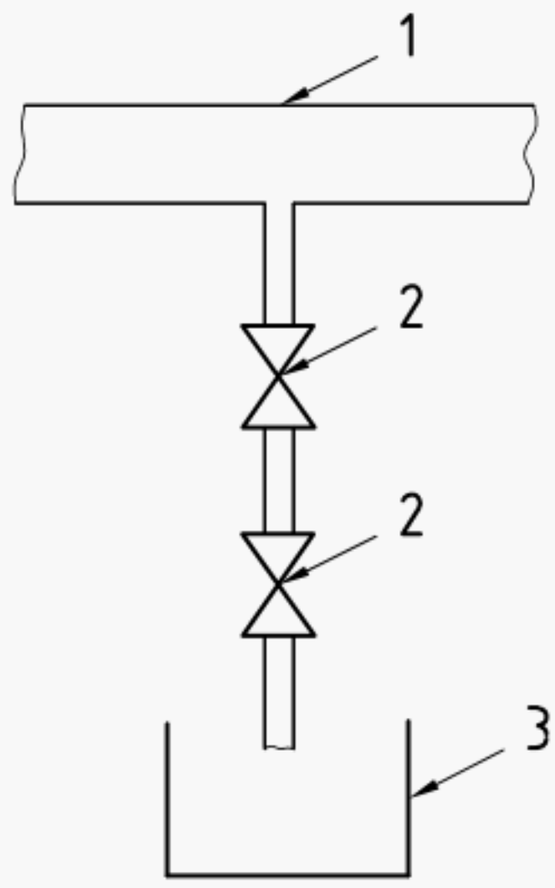

Key

1 Live pitch line

2 Valve

3 Sample container

Figure 10 — Double-valved pipeline sampler — General arrangement

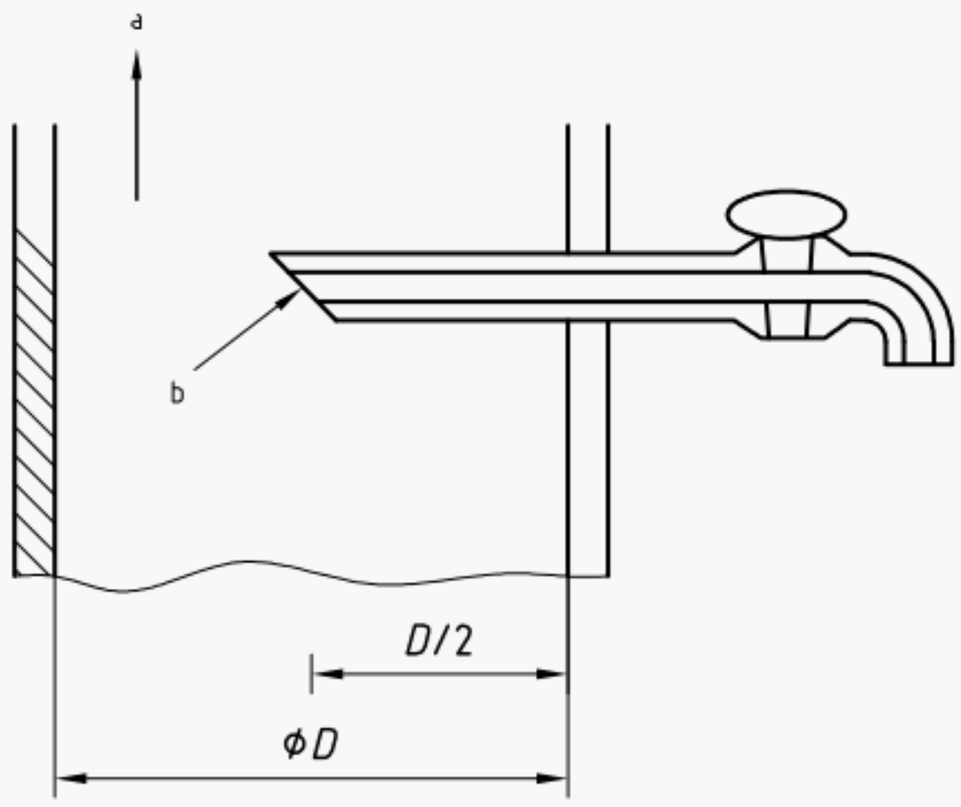

[a] Direction of flow

[b] End of pipe bevelled at 45° to face the flow of liquid

Figure 11 — Tank or pipeline sampler

7.3.2 Bulk storage tanks with agitation or circulation capability

Agitation may typically be by means of a propeller or paddle entering the tank through the side or top. Circulation may typically be pumped recirculation.

If mechanical agitation or circulation is adequate, based on observation through sampling, then samples may be taken by any of the methods described in 7.3.1.2, 7.3.1.3, 7.3.1.4 or 7.3.1.5 and in accordance with 7.2. Alternatively the sample may be taken via a sampling valve or similar device either attached directly to the storage tank or incorporated into a pumped recirculation system. Figure 10 illustrates a suitable sampling arrangement.

The number and size of individual samples and the size of the final bulk samples taken shall be in accordance with 7.2 and Figure 6 or Table 3. Sampling details should be included in the sampling report (see clause 10).

Before the sample is taken, approximately 3 l of pitch or twice the volume of the sample chamber between the upper and lower valves, whichever is the greater, should be drawn from the sample device and discarded safely.

Detachable or demountable sampling devices are not recommended for operational and safety reasons.

7.4 Practical procedures for sampling from pipelines during loading or unloading of ships, barges, road tankers and rail vehicles

During the loading of ships or barges samples may be taken from the pipeline through which the material is flowing if a suitable sampling device is present in the line. Suitable sampling arrangements are illustrated in Figures 10 and 11.

The preferred arrangement from a safety and reliability viewpoint is that illustrated in Figure 10.

7.5 Practical procedures for sampling from ships tanks

The sampling methods described in 7.3.1 should be used. If the contents of a ships tank(s) can be circulated then the methods in 7.3.2 should be used.

If the ship(s) tanks are to be sampled during discharge then the methods in 7.3 and 7.4 should be used.

Many ships have multiple tanks or compartments. The contents of the tanks that contain pitch intended to conform to the same specification may be considered individually, in groups or as one consignment depending on the agreement between supplier and user. The number of individual samples to be taken shall be determined by reference to 7.2.

Report the sampling plan in the sampling report (see clause 10).

7.6 Practical procedures for sampling from road and rail vehicles

Use one or more of the sampling methods in 7.3.1 to take samples from road and rail vehicles.

If the tanks are to be sampled during discharge then the methods described in 7.3 and 7.4 should be used.

Sample(s) may be taken from the sample valve if the tanks are provided with them. When such sampling devices are required, they should be built into the tank itself. Sampling directly from the tank discharge valve is not recommended because the material at the end of discharge may not be representative of the bulk.

Direct sampling from the tank discharge valve prior to discharge or during transfer is also strongly discouraged on health and safety grounds.

7.7 Further preparation of sample(s)

Incremental samples taken from ships or other transport with multiple tanks shall only be composited to represent part or all of the consignment if there is an agreement to this effect between buyer and seller.

Compositing sub-samples to form larger samples to represent discrete and separate parts, for example separate parts of a consignment, or to represent all of the consignment may be made using individual samples in solid or in liquid form.

It is recommended that individual samples which are to be composited in liquid form be at a temperature approximately 100 °C above the maximum ring and ball softening point, as specified in ISO 5940, given in the specification or equivalent quality document. The samples shall be thoroughly mixed by mechanical or manual stirring.

Incremental samples may alternatively be solidified prior to the preparation of the composite sample. It is recommended that the maximum particle size be initially reduced to less than by means of a punner (see Figure 4) or other suitable means.

It may be necessary to further reduce the particle size as part of the sample size reduction procedure for hard pitch (see 8.2) when, for example preparing a laboratory sample from the final sample. A punner (see Figure 4) or other suitable means shall be used.

If the sample is to be stored for an extended period then the risk of sample oxidation on measured properties has to be considered; particles should not be deliberately made less than 2 mm in size.

8 Sample size reduction

8.1 General

Only a fraction of the final sample is usually required for the laboratory sample. Suitable procedures for sample size reduction are therefore described in 8.2 and 8.3, for pitch in solid form.

8.2 Hard pitch

8.2.1 Riffle method

The bulk composite sample (final sample) may be sub-divided by passing it one or more times through a riffle of suitable dimensions (see Figure 12).

Feed the sample into the top of the riffle where it is divided into the two receivers. Reject the contents of one of the receivers for sampling purposes and feed the contents of the other receiver again into the riffle. Repeat the process as necessary until the required quantity of final sample is obtained.

8.2.2 Coning and quartering

Alternatively the bulk composite sample (final sample) may be sub-divided by the coning and quartering method, as shown in Figure 13. The sample shall be placed on a clean, impervious surface and formed into a cone by shovelling. Each shovelful shall be placed on top of the last so that the material runs down the sides of the pile and is thereby distributed as evenly as possible. If larger pieces of material roll away from the base of the cone, they shall be pushed back to the end of the cone. From this first cone, two further cones are made successively in a similar manner.

The third cone is then flattened by repeated vertical insertions of a shovel. Beginning at the centre and working outwards in a spiral round the cone, lifting the shovel clear of the material after each insertion. The flattened heap should be uniform in thickness and in diameter.

The flattened heap is then quartered along two diameters which intersect at right-angles. One pair of diagonally opposite quarters are shovelled out and discarded for sampling purposes. Any large lumps in the remaining two quarters are broken up using a punner (see Figure 4) or similar implement. The entire process of coning and quartering is repeated until the required quantity of final sample is obtained.

8.3 Soft pitch

Heat the final sample to about 50 °C above its expected softening point determined by the method specified in ISO 5940, mix thoroughly and run off the required quantity into the sample container.

Dimensions in millimetres

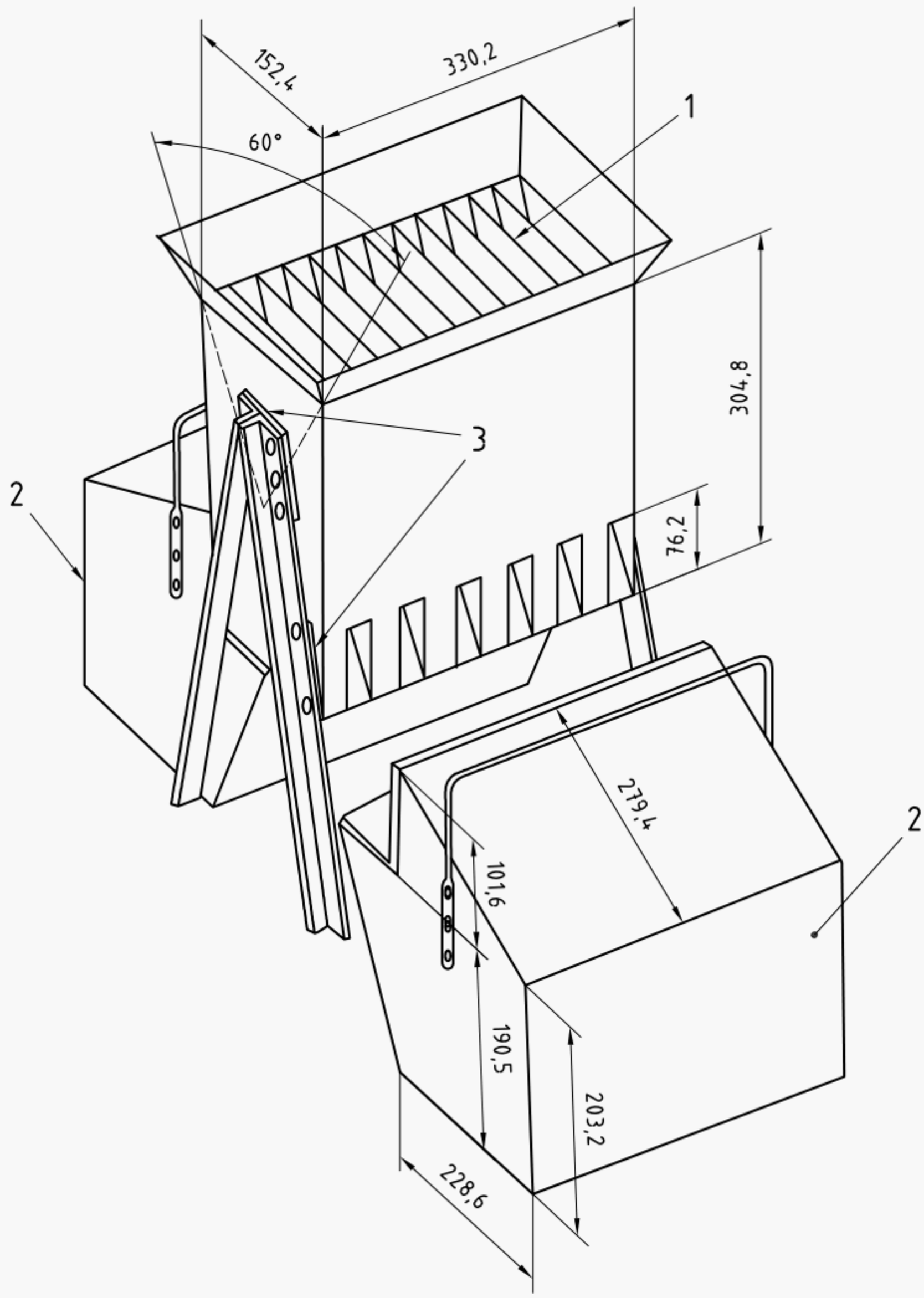

Key

1 Twelve apertures, 25,4 mm

2 Bin

3 Packing (12,7 mm) to allow clearance for container

4 Angle bracket, 25,4 mm

Figure 12 — Typical riffle for sample size reduction of material with particle size of approximately 5 mm **diameter**

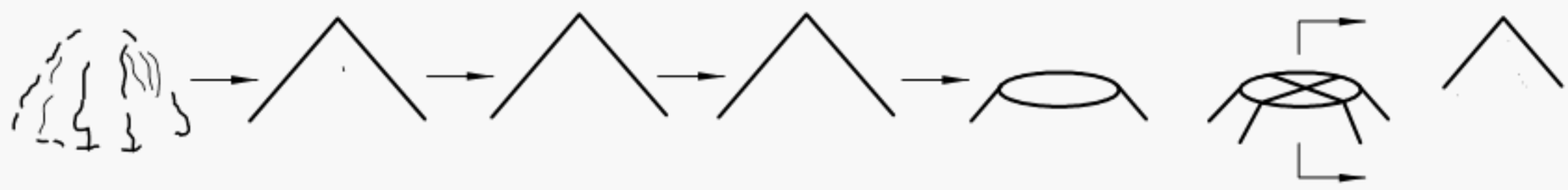

Figure 13 — Coning and quartering method

9 Sample containers

9.1 Size

The size of the laboratory sample container shall be such that it is almost completely filled by the sample, the space left being sufficient for expansion and for subsequent mixing of the sample.

9.2 Lever lid tins

If tin-plated cans with soldered seams are to be used, the temperature of the pitch is recommended not to be higher than approximately 100 °C above the softening point determined in accordance with ISO 5940. Cans, even when new, shall be carefully inspected for flaws and for cleanliness prior to use. Flawed cans shall be discarded. If the sampler suspects that a can is not clean then it may be cleaned using either a low-boiling solvent such as toluene or using citrus-based aqueous cleaning agent.

Tin cans after washing with low-boiling organic solvent may be conveniently blown dry with filtered air. Benzene should not be used because of its toxic nature. The solvent may also be steamed out and the cans dried in an oven. Cans that have been cleaned with citrus-based aqueous materials should be rinsed with water of recognized purity and then dried in an oven.

Suitable precautions shall be taken with combustible solvents.

9.3 Plastic bags

Polyethylene bags that can be securely sealed may be used for all except soft and liquid pitch samples.

9.4 Labelling and storage

All sample containers shall be labelled securely and all details shall be clearly and permanently marked on the label. Tie-on labels or self-adhesive labels are preferred. The panels provided on some polyethylene sample bags may be used to record sample details (see clause 10). If labels have water-soluble gum as adhesive then they shall be further secured with transparent adhesive tape or similar. Sample details may additionally be written on tins using paint or commercially available markers that are resistant to removal. Labelling such as bar-coding is encouraged, but labels in writing shall remain the primary means of sample identification.

All details shall be clearly and permanently included in the label. Samples shall be stored so as to avoid atmospheric oxidation (see 4.1). It is recommended that samples also be stored away from direct sunlight.

10 Sampling report

A sampling report shall be written containing all essential information pertaining to the material sampled and the manner in which the sample was prepared. It shall contain at least the following information:

a) a reference to this International Standard i.e. ISO 6257, and in particular to those clauses which have been followed;

b) unambiguous sample identification marks such as name and number on the label of the sample container;

c) the date, and duration of the sampling;

d) the sample origin (for example ships' hold number or tank number) and relevant details, for example “from pipeline during loading” or “from ships tank ZZ prior to unloading”;

e) a full description of the sampling plan (see 5.2 and 7.2) including sample masses and the method of sample size reduction (e.g. riffle method);

f) the approximate size of consignment;

g) the equipment used (for example throw-away container for tank sampling or pipeline sampler during discharge);

h) any comments on abnormalities such as unusual weather conditions or particular problems taking samples;

i) any operation not included in this International Standard or in the International Standards to which reference is made, or regarded as optional.

Bibliography

[1] ISO 6206, *Chemical products for industrial use — Sampling — Vocabulary*

[2] ASTM D140-01, *Standard Practice for Sampling Bituminous Materials*

BS 6043-1-1:2002 ISO 6257:2002

BSI — British Standards Institution

BSI is the independent national body responsible for preparing British Standards. It presents the UK view on standards in Europe and at the international level. It is incorporated by Royal Charter.

Revisions

British Standards are updated by amendment or revision. Users of British Standards should make sure that they possess the latest amendments or editions.

It is the constant aim of BSI to improve the quality of our products and services. We would be grateful if anyone finding an inaccuracy or ambiguity while using this British Standard would inform the Secretary of the technical committee responsible, the identity of which can be found on the inside front cover. Tel: +44 (0)20 8996 9000. Fax: +44 (0)20 8996 7400.

BSI offers members an individual updating service called PLUS which ensures that subscribers automatically receive the latest editions of standards.

Buying standards

Orders for all BSI, international and foreign standards publications should be addressed to Customer Services. Tel: +44 (0)20 8996 9001. Fax: +44 (0)20 8996 7001. Email: orders@bsi-global.com. Standards are also available from the BSI website at http://www.bsi-global.com.

In response to orders for international standards, it is BSI policy to supply the BSI implementation of those that have been published as British Standards, unless otherwise requested.

Information on standards

BSI provides a wide range of information on national, European and international standards through its Library and its Technical Help to Exporters Service. Various BSI electronic information services are also available which give details on all its products and services. Contact the Information Centre. Tel: +44 (0)20 8996 7111. Fax: +44 (0)20 8996 7048. Email: info@bsi-global.com.

Subscribing members of BSI are kept up to date with standards developments and receive substantial discounts on the purchase price of standards. For details of these and other benefits contact Membership Administration. Tel: +44 (0)20 8996 7002. Fax: +44 (0)20 8996 7001. Email: membership@bsi-global.com.

Information regarding online access to British Standards via British Standards Online can be found at http://www.bsi-global.com/bsonline.

Further information about BSI is available on the BSI website at http://www.bsi-global.com.

Copyright

Copyright subsists in all BSI publications. BSI also holds the copyright, in the UK, of the publications of the international standardization bodies. Except as permitted under the Copyright, Designs and Patents Act 1988 no extract may be reproduced, stored in a retrieval system or transmitted in any form or by any means – electronic, photocopying, recording or otherwise – without prior written permission from BSI.

This does not preclude the free use, in the course of implementing the standard, of necessary details such as symbols, and size, type or grade designations. If these details are to be used for any other purpose than implementation then the prior written permission of BSI must be obtained.

Details and advice can be obtained from the Copyright & Licensing Manager. Tel: +44 (0)20 8996 7070. Fax: +44 (0)20 8996 7553. Email: copyright@bsi-global.com.

BSI

389 Chiswick High Road

London

W4 4AL