BS 6172:2010

BSI Standards Publication

Specification for installation, servicing and maintenance of domestic gas cooking appliances (2nd and 3rd family gases)

bsi.

...making excellence a habit.™

Publishing and copyright information
The BSI copyright notice displayed in this document indicates when the document was last issued.

© BSI 2010

ISBN 978 0 580 68024 3

ICS 97.040.20

The following BSI references relate to the work on this standard:
Committee reference GSE/30
Draft for comment 10/30204527 DC

Publication history
First published as CP 332.401, September 1947
Second edition, May 1962
Third edition, as CP 334-1, August 1965
Fourth edition, as BS 6172, June 1982
Fifth edition, October 1990
Sixth edition, August 2004
Seventh edition, November 2010

Amendments issued since publication

Date	Text affected

Contents

Foreword *iii*
1 Scope *1*
2 Normative references *1*
3 Terms and definitions *2*
4 Competence *3*
5 Design and planning *4*
6 Selection of cooking appliances *5*
7 Location of cooking appliances *6*
8 Siting and clearance requirements for cooking appliances *7*
9 Ventilation *10*
10 Flueing *10*
11 Gas connections *11*
12 Stability devices *14*
13 Electrical supplies and wiring *16*
14 Commissioning *16*
15 Advice to be given to the user *17*

Bibliography *19*

List of figures
Figure 1 – Minimum clearance zones for gas cooking appliances *8*
Figure 2A – Typical flexible connector *12*
Figure 2B – Guidance on installation of flexible connectors *13*
Figure 3 – Typical methods of provision of cooker stability *15*

List of tables
Table 1 – Approval bodies and statutory regulations by country/territory *4*
Table 2 – Competence requirements by country/territory *4*

Summary of pages
This document comprises a front cover, an inside front cover, pages i to iv, pages 1 to 22, an inside back cover and a back cover.

This page deliberately left blank

Foreword

Publishing information

This British Standard is published by BSI and came into effect on 30 November 2010. It was prepared by Panel GSE/30/-/10, *Domestic cooking appliances*, under the authority of Technical Committee GSE/30, *Gas Installations (1st, 2nd and 3rd family gases)*. A list of organizations represented on this committee can be obtained on request to its secretary.

Supersession

This British Standard supersedes BS 6172:2004, which is withdrawn.

Information about this document

This is a full revision of the standard. The standard has been updated to reflect changes in installation practice and legislation.

This standard allows manufacturers' instructions to specify a method of installation, commissioning, servicing or maintenance that differs in points of detail from this standard. This reference to manufacturers' instructions is allowed only where it will result in at least an equivalent level of safety. It is important that the manufacturer's instructions are followed. This standard is applicable where manufacturers' instructions do not give specific advice.

Presentational conventions

The provisions of this standard are presented in roman (i.e. upright) type. Its requirements are expressed in sentences in which the principal auxiliary verb is "shall".

Commentary, explanation and general informative material is presented in smaller italic type, and does not constitute a normative element.

Contractual and legal considerations

This publication does not purport to include all the necessary provisions of a contract. Users are responsible for its correct application.

Compliance with a British Standard cannot confer immunity from legal obligations.

In particular, attention is drawn to the following statutory regulations.

The Gas Safety (Installation and Use) Regulations 1998 [1]

The Gas Safety (Installation and Use) Regulations (Northern Ireland) 2004 [2]

The Health and Safety (Gas) (Guernsey) Ordinance 2006 [3]

The Gas Appliance (Safety) Regulations 1995 [4]

The Gas Cooking Appliances (Safety) Regulations 1989 [5]

The Building Regulations 2000 (for England and Wales), as amended [6]

The Building Standards (Scotland) Regulations 2004, as amended [7]

The Building (Amendment) Regulations (Northern Ireland) 2006 [8]

The Gas Safety (Installation and Use) Regulations 1994, as amended and applied by the Isle of Man Gas Safety (Application) Order 1996 [9]

The Asbestos (Prohibitions) Regulations 1992 [10]

The Asbestos (Prohibitions) (Amendment) Regulations 1999 [11]

The Asbestos (Prohibitions) (Amendment) Regulations 2003 [12]

1 Scope

This British Standard specifies requirements for the installation (see Note 1), servicing and maintenance of new, previously used and second hand domestic gas-fired cooking appliances in domestic, commercial and industrial premises (see Note 2, Note 3 and Note 4), including educational establishments.

It is applicable to gas cooking appliances conforming to BS EN 30-1-1, BS EN 30-1-2, BS EN 30-1-3 and BS EN 30-2-2, or to BS 5386-3 or BS 5386-4, burning 2nd and 3rd family gases.

It is not applicable to cookers with integral boilers used to provide central heating, which are covered in BS 6798.

It is recognised that this standard might be referred to for the installation of gas cooking appliances conforming to standards other than BS EN 30-1-1, BS EN 30-1-2, BS EN 30-1-3 and BS EN 30-2-2, or BS 5386-3 or BS 5386-4. However, other criteria might also apply, such as surface temperatures, temperature rise of surroundings, appliance stability, etc., and these have to be taken into account in the method of installation.

NOTE 1 For the purposes of this standard, installation includes design, inspection and commissioning. It is recognized that each of these tasks can at times be performed by the same persons.

NOTE 2 As well as normally constructed dwellings, domestic premises include any permanently sited leisure accommodation vehicles, residential park homes and permanently moored boats. Particular and additional requirements exist for the supply of gas to these categories of premises and can be found in IGEM/G/6 [13]. Neither this standard nor IGEM/G/6 [13] applies to gas installations in towed or motorized caravans.

NOTE 3 Where domestic cooking appliances are installed in commercial or industrial premises in conjunction with catering appliances, reference should be made to BS 6173, particularly with regard to ventilation and extraction.

NOTE 4 For commercial premises that are primarily domestic premises, e.g. a small bed and breakfast premises, the general rules of BS 6173 do not apply except with respect to hygiene and general safety.

2 Normative references

The following referenced documents are indispensable for the application of this document. For dated references, only the edition cited applies. For undated references, the latest edition of the referenced document (including any amendments) applies.

BS 669-1, *Flexible hoses, end fittings and sockets for gas burning appliances – Part 1: Specification for strip-wound metallic flexible hoses, covers, end fittings and sockets for domestic appliances burning 1st and 2nd family gases*

BS 5440-1, *Flueing and ventilation for gas appliances of rated input not exceeding 70 kW net (1st, 2nd and 3rd family gases) – Part 1: Specification for installation of gas appliances to chimneys and maintenance of chimneys*

BS 5440-2:2009, *Flueing and ventilation for gas appliances of rated input not exceeding 70 kW net (1st, 2nd and 3rd family gases) – Part 2: Specification for the installation and maintenance of ventilation provision for gas appliances*

BS 5482-1, *Code of practice for domestic butane- and propane-gas-burning installations – Part 1: Installations at permanent dwellings, residential park homes and commercial premises, with installation pipework sizes not exceeding DN 25 for steel and DN 28 for corrugated stainless steel or copper*

BS 6891, *Installation of low pressure gas pipework of up to 35 mm (R1¼) in domestic premises (2nd family gas) – Specification*

BS 7671, *Requirements for electrical installations – IEE Wiring Regulations*

BS 7927 (withdrawn) *Heating appliances for domestic applications – Portable apparatus designed to detect and measure specific combustion flue gas products – Requirements*

BS EN 50379-3, *Specification for portable electrical apparatus designed to measure combustion flue gas parameters of heating appliances – Part 3: Performance requirements for apparatus used in non-statutory servicing of gas fired heating appliances*

IGE/UP/1, Edition 2. *Strength testing, tightness testing and purging of industrial and commercial gas installations*. Kegworth: Institution of Gas Engineers and Managers, 2005.

IGE/UP/1A, Edition 2, *Strength and tightness testing and direct purging of small low pressure industrial and commercial gas installations*, Kegworth: Institution of Gas Engineers and Managers, 2005.

IGE/UP/1B, Edition 2, *Tightness testing and direct purging of small natural gas installations*, Kegworth: Institution of Gas Engineers and Managers, 2006.

IGEM/UP/2, Edition 2, *Installation pipework on industrial and commercial premises*, Kegworth: Institution of Gas Engineers and Managers, 2008.

IGEM/UP/11, Edition 2, *Gas installations for educational establishments*, Kegworth: Institution of Gas Engineers and Managers, 2010.

UKLPG UIS 014, *Gas soundness testing of LPG service pipework, installation pipework and appliances in holiday homes, caravans and motor homes.* Kenilworth: UKLPG, 2005.

3 Terms and definitions

For the purposes of this British Standard, the following terms and definitions apply.

3.1 flexible connector
pipe with appropriate connector ends, designed to have a considerable degree of flexibility to facilitate the connection of a gas cooking appliance to an installation pipe and to allow the appliance to be moved a short distance without the need for disconnection

3.2 free-standing cooker
cooking appliance resting directly on the floor and comprising:

a) a hotplate, including one or more burners or electric rings;

b) one or more ovens, with or without a thermostat;

c) possibly a grill and/or griddle

*NOTE This includes cookers with double oven constructions greater than 600 mm width that are not of heavy duty cast iron (see also **3.4** cooking range).*

3.3 dual-fuel cooking appliance
cooking appliance that utilizes both gas and electricity to provide the heat for the cooking process

3.4 cooking range
heavy duty cast iron cooker

*NOTE It is necessary to define this type of cooking appliance separately from a free-standing cooker (see **3.2**) because:*

- *the means of connection to the gas supply is different (see **11.1.2**); and*
- *it is current industry practice to call light-weight sheet metal cookers with double oven construction greater than 600 mm "ranges".*

3.5 hob
independent hotplate specifically designed to be installed into the kitchen work top

3.6 hotplate
appliance, or part of an appliance, comprising one or more covered or uncovered burners and designed to support cooking vessels

3.7 internal kitchen
kitchen in which there is no opening communicating directly with outside air

NOTE Detailed examples of internal kitchens appear in Technical Bulletin 005 [14], [15], [16].

3.8 previously used appliance
appliance that stays within the ownership of the gas user but may be relocated within an existing kitchen or moved from one property to another during a house move

3.9 second hand appliance
appliance that is obtained in a used/refurbished state and installed for that particular gas user for the first time

3.10 termination point
fitting on the installation pipework to which cooking appliances are connected

NOTE Where "the cooking appliance" is referred to in the text it might mean either a cooker, or a hotplate, oven, grill or griddle, or any combination of these in a single assembly.

4 Competence

Persons carrying out design, installation, servicing and maintenance associated with and/or impacting on "gas work", "electrical installation" or "ventilation provision" for gas appliances shall be competent.

*COMMENTARY ON CLAUSE **4***
It is a statutory requirement in Great Britain, the Isle of Man, Northern Ireland and Guernsey (see Table 1) that all "gas work" be carried out by a business or self-employed person(s) that is a member of a "class of persons" registered with a registration body which has been approved by an approval body (see Table 1) to operate and maintain such a register.

At the time of publication, the only body with approval to operate and maintain a register of individuals/businesses who are "members of a class of persons" is the Gas Safe Register. Thus it is essential that all businesses or self employed gas engineers are registered with the Gas Safe Register.

The qualifications which persons need to have to be deemed competent to carry out gas work are given in Table 2.

Table 1 **Approval bodies and statutory regulations by country/territory**

Country/territory	Approval body	Statutory regulations
Great Britain	Health and Safety Executive (HSE)	Gas Safety (Installation and Use) Regulations 1998 [1]
Isle of Man	Health and Safety at Work Inspectorate (HSWI)	Gas Safety (Installation and Use) Regulations 1994, as amended and applied by the Isle of Man Gas Safety (Application) Order 1996 [9]
Northern Ireland	Health and Safety Executive Northern Ireland (HSENI)	Gas Safety (Installation and Use) Regulations (Northern Ireland) 2004 [2]
Guernsey	Health and Safety Executive for the States of Guernsey [HSE (Guernsey)]	Health and Safety (Gas) (Guernsey) Ordinance 2006 [3]

Table 2 **Competence requirements by country/territory**

Qualifications	Great Britain and Isle of Man	Northern Ireland	Guernsey
Current certificate(s) of competence in the type of gas work to be conducted, issued by an awarding body accredited by the United Kingdom Accreditation Service (UKAS) (ACS certification)	✓	✓	✓
National/Scottish Vocational Qualification (N/SVQ accredited by Ofqual), which is aligned in matters of gas safety	✓	✓	✓
National/Scottish Vocational Qualification (N/SVQ accredited by Ofqual), which is aligned under the HSC ACoP arrangement [A)] as approved with the registration body	✓	✓	✗
Any other scheme recognized by the gas registration body for registration purposes	✓	✓	✓

[A)] Guidance on the individual competency required for gas work is given in the Health and Safety Commission's Approved Code of Practice (ACoP) (COP 20) *Standards of training in safe gas installation* [17].

5 Design and planning

The following shall be ascertained or obtained before planning of the installation begins:

a) availability of a gas supply;

b) location, size and layout of the room in which the cooking appliance is to be installed;

c) size, height, route and termination of any flue;

d) availability of adequate air for combustion and ventilation;

e) availability of an electricity supply, where applicable;

f) recommended method of installation given in the cooking appliance manufacturer's instructions;

g) proximity of the proposed site of the cooking appliance to combustible materials.

*COMMENTARY ON CLAUSE **5***
Collaboration is essential between those concerned with the design of the cooking appliance and its installation, both at the planning stage and during the execution of the work.

6 Selection of cooking appliances

6.1 New appliances

The operative shall ensure that a new cooking appliance carries a CE mark and is supplied with installation, servicing and user instructions.

The cooking appliance to be installed shall be one that has been marked by the manufacturer as being suitable for the gas with which it is to be supplied. If the cooking appliance is not suitable for the gas being supplied, it shall not be installed or connected to the gas supply.

A cooking appliance shall only be installed if it has a readable data plate.

Conversion to another gas, if necessary, shall be carried out strictly in accordance with the manufacturer's instructions, using the manufacturer's kit of parts.

*COMMENTARY ON **6.1***
The operative should refer to the data plate and/or take other steps to ensure that the cooking appliance is suitable for the pressure and type of gas to be burnt.

Additional requirements for the selection of an appliance to be installed in a flat or other multi-dwelling building, are given in IGE/G/5 [18].

If there is any doubt as to the suitability of a cooking appliance for a particular gas, then the cooking appliance manufacturer should be consulted.

Further information on the labelling of gas appliances is given in DD 221.

New cooking appliances covered by this standard fall within the scope of the European Gas Appliances Directive [19], implemented in the UK by the Gas Appliances (Safety) Regulations [4], which require these cooking appliances to be CE marked.

The operative should ensure that the packaging and the appliance's data plate are marked with at least the following information:

a) the letters "GB";

b) the type of gas and appliance inlet pressure as follows:

1) for an appliance adjusted for natural gas, "G20 and/or natural gas 20 mbar" plus the designation 1_{2H};

2) for an appliance adjusted for butane, "G30 and/or butane 29 mbar" plus the designation 1_{3B};

3) for an appliance adjusted for propane, "G31 and/or propane 37 mbar" plus the designation 1_{3P};

4) for an appliance that will burn either butane or propane at the correct pressure, "G30/G31 and/or butane/propane 29/37 mbar" plus the designation 1_{3+}.

Where a cooking appliance's data plate carries the letters CAT 1 or CAT 11 followed by the gas type designations, (i.e. $_{2H}$, $_{3B}$, $_{3P}$), then the appliance can be used for different types of gases when adjusted to do so. In such a case, the operative should ensure that the cooking appliance is correctly adjusted.

6.2 Previously used and second hand cooking appliances

A previously used or second hand appliance shall only be installed if it is:

a) in a serviceable and safe condition;

b) suitable for the gas being supplied;

c) fitted with a readable data plate.

Conversion to another gas, if necessary, shall be carried out strictly in accordance with the manufacturer's instructions, using the manufacturer's kit of parts.

For a previously used appliance, in the absence of manufacturer's installation instructions the manufacturer shall be contacted to obtain the installation instructions. In the event that these are not available, the cooker shall be installed in accordance with the present standard.

For a second hand appliance the cooker shall only be installed if the installation instructions have been obtained.

*COMMENTARY ON **6.2***
For a second hand appliance it is a requirement of the Gas Cooking Appliances (Safety) Regulations 1989 [5] that the manufacturer's installation instructions are provided with the appliance.

Where a previously used or second hand cooking appliance carries a CE mark, its data plate is required to carry the information on type of gas and appliance inlet pressure.

Where a cooking appliance does not carry a CE mark, it has to be borne in mind that other criteria could apply, such as surface temperatures, cooking appliance stability, ventilation, etc., and these need to be taken into account in the method of installation.

7 Location of cooking appliances

7.1 A cooking appliance shall be located in accordance with the manufacturer's instructions.

7.2 A cooking appliance shall not be located in a room or internal space containing, or intended to contain, a bath or shower.

7.3 Unless it is a single burner hotplate, a cooking appliance shall not be located in a bed sitting room of volume less than 20 m^3.

7.4 A cooking appliance for use with 3rd family gases shall not be located in a room, such as a cellar or basement, which has no natural floor level ventilation.

*COMMENTARY ON **7.4***
The Gas Safety (Installation and Use) Regulations [1] prohibit the installation of a gas appliance for use with 3rd family gases, which uses automatic-ignition or a pilot light, in a room or internal space below ground level, e.g. a basement. The Regulations do not preclude the installation of such appliances into rooms or internal spaces which are basements with respect to one side of the building but which are open to ground level on the opposite side.

7.5 A cooking appliance shall be located where there is sufficient space for ready access for installation, operation and servicing.

7.6 For the location of 3rd family gas appliances in boats, where there is no alternative to a low-level appliance location, a combustible gas detector(s) shall be installed and interlocked with the gas supply for safety.

*COMMENTARY ON CLAUSE **7***
Additional requirements for installations in educational establishments and guidance for those with responsibility for gas safety are given in IGEM/UP/11.

8 Siting and clearance requirements for cooking appliances

8.1 Siting of a cooking appliance shall be in accordance with the manufacturer's instructions.

*COMMENTARY ON **8.1***
The cooking appliance should be conveniently positioned in relation to other facilities, such as the sink and working spaces, taking account of the requirements of the user. Siting adjacent to doors or openable windows should be avoided owing to the effects of draughts.

Locations that restrict the use of doors, other kitchen furniture or utensils should be avoided.

Close proximity of the appliance to combustible materials, such as curtains, window sills etc., should be avoided.

8.2 Clearance around a cooking appliance and within the kitchen furniture shall be in accordance with the appliance manufacturer's instructions regarding the supply of air, the discharge of combustion products, and protection against excessive temperatures.

*COMMENTARY ON **8.2***
In the absence of specific guidance in the manufacturer's instructions, Figure 1 should be followed for general guidance on clearance zones.

Protective cladding, which is insulating material that can be specified by the cooking appliance manufacturer and is fitted between the cooking appliance case and any adjacent combustible material, might reduce the amount of clearance required.

8.3 A free-standing cooker shall be sited on a stable base and, if it is to be fixed with a flexible connector, a level surface in front of the cooking appliance shall be provided to allow it to be moved forward far enough for disconnection.

*COMMENTARY ON **8.3***
Where a plinth is used to raise a cooking appliance, it should be securely fixed and large and strong enough to accommodate the cooker.

8.4 A cooking range shall be sited on a stable, non-combustible base capable of taking its weight.

8.5 Where gas hobs and built-in ovens are installed in kitchen furniture, the kitchen furniture shall be of sufficient strength to support these, and shall be secured to the fabric of the building.

8.6 Where a cooker hood is to be used, both the gas cooker and the hood manufacturer's installation instructions shall be consulted. Where different distances are given from the top of the cooker to the bottom of the cooker hood, the greater of the two specified distances shall be used.

Figure 1 **Minimum clearance zones for gas cooking appliances**

All dimensions are in millimetres

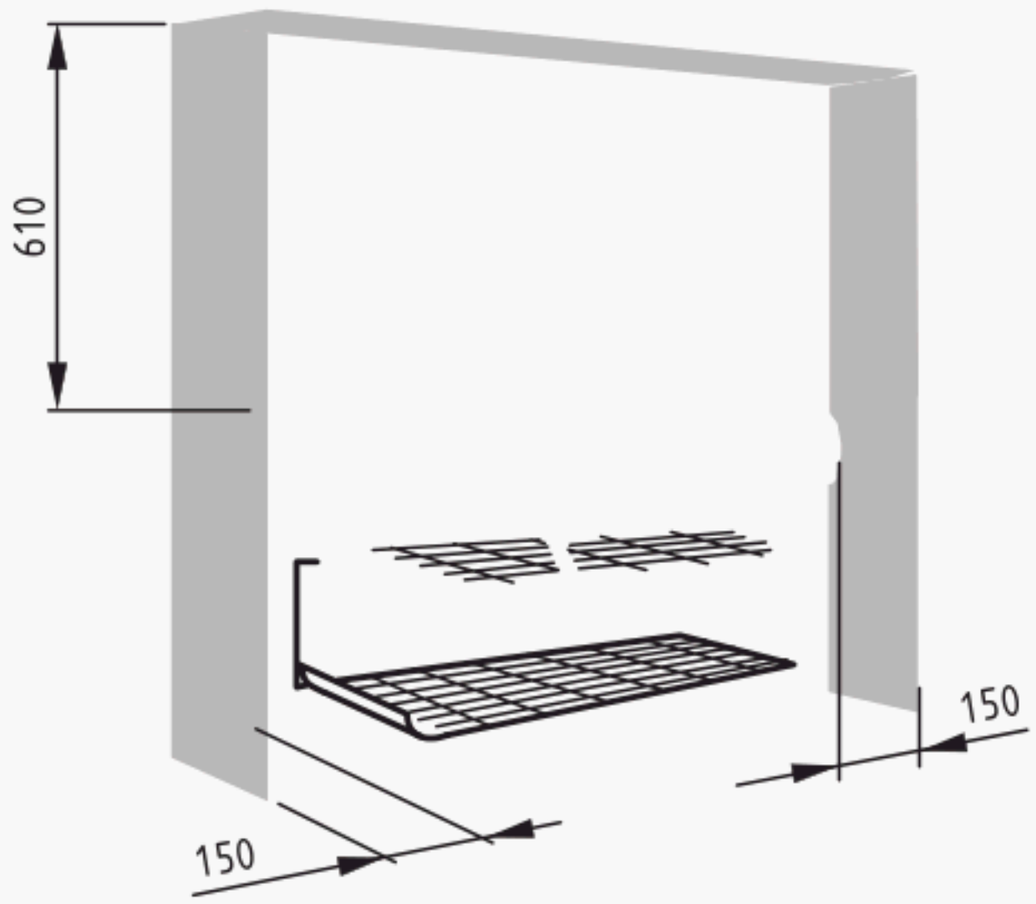

a) Grill unit – Clearances to walls/surfaces adjacent and above

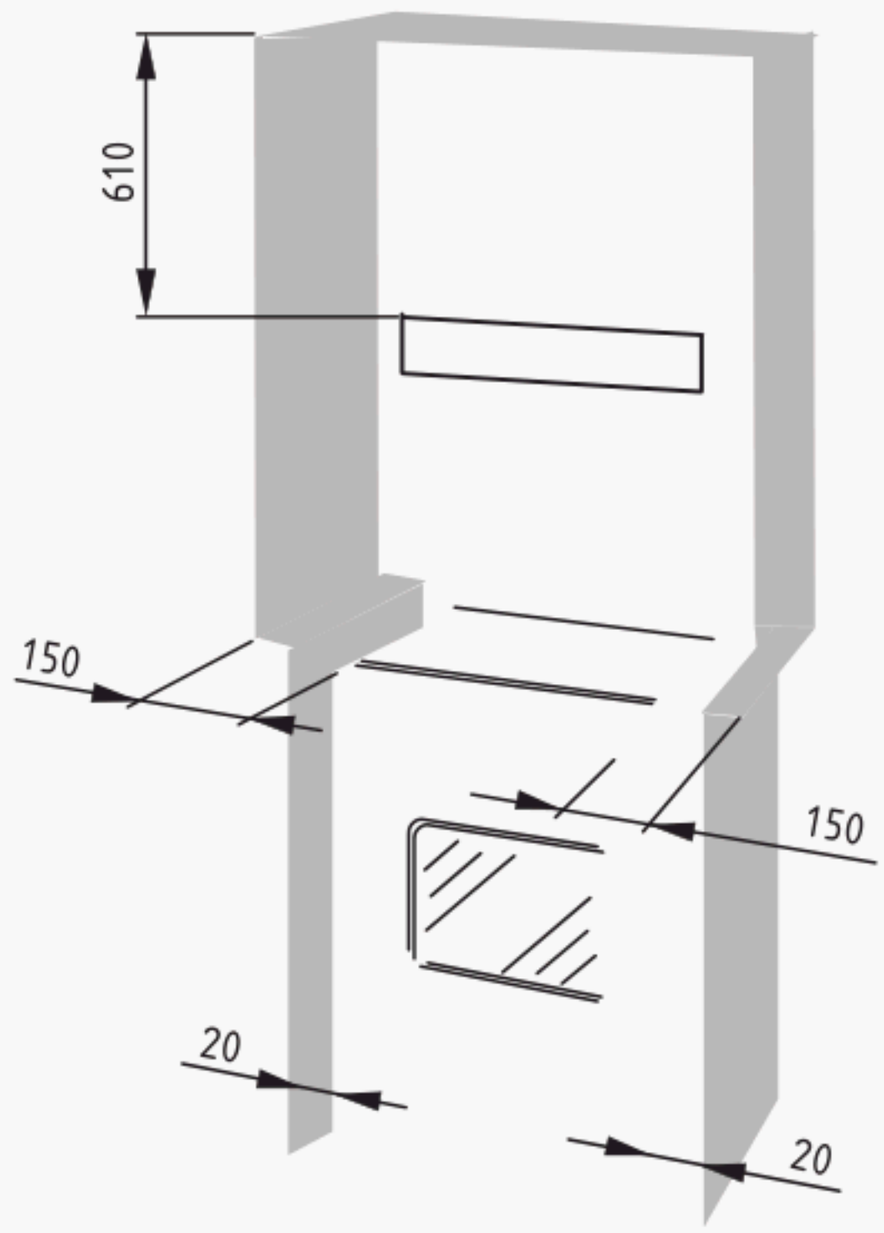

b) Free-standing cooker with high level grill – Clearances to walls/surfaces adjacent and above

Key

Zone to be kept clear of combustible materials

Figure 1 **Minimum clearance zones for gas cooking appliances** *(continued)*

All dimensions are in millimetres

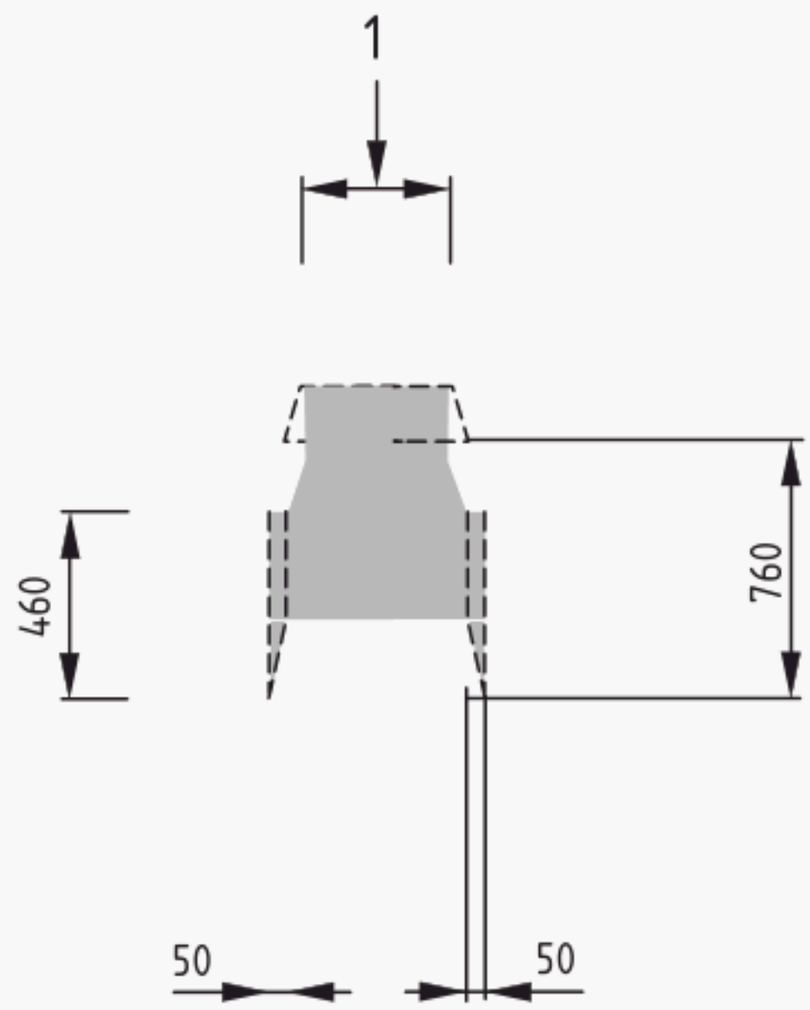

1) Clearances to walls/surfaces behind and above

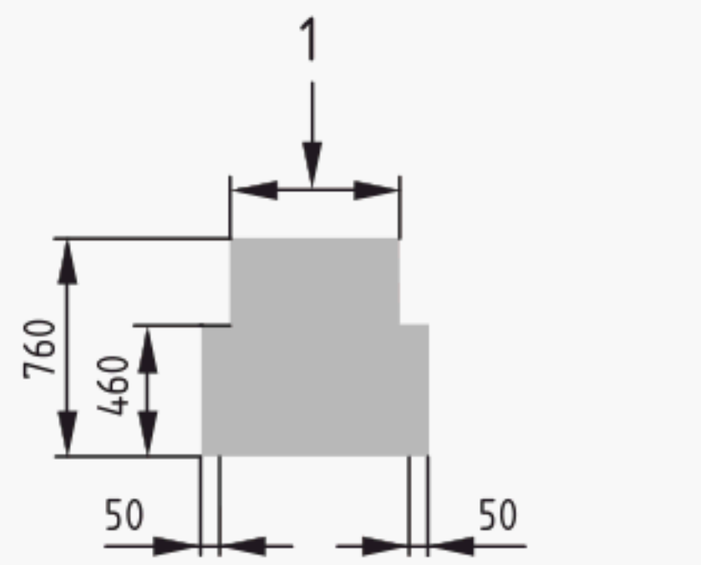

2) Clearances to adjacent walls/surfaces

c) Hob

Key

1 Width of hob

Zone to be kept clear of combustible materials

9 Ventilation

9.1 General

The ventilation for the cooking appliance shall conform to the manufacturer's instructions and to BS 5440-2.

When installing a cooking appliance in a room or space that already contains one or more fuel burning appliances, the ventilation shall conform to the requirements for multi-appliance installations in BS 5440-2.

9.2 Mechanical extraction

Where mechanical extraction is to be provided, the effect of this on any other gas burning appliances shall be determined prior to installation.

NOTE For additional information, refer to BS 5440-1.

9.3 Flueless cooking appliances in an internal kitchen

Where a flueless cooking appliance is installed in an internal kitchen, ventilation shall be in accordance with BS 5440-2:2009, **7.4**.

*COMMENTARY ON **9.3***
The regulations dealing with ventilation of internal kitchens are the Building Regulations (for England and Wales) [6], the Building Standards (Scotland) Regulations [7] and the Building Regulations (Northern Ireland) [8]. Information is also provided for England and Wales in Approved Document F to the Building Regulations [20], for Scotland in the Scottish Building Standards Agency Technical Handbook Domestic [21], for Northern Ireland in the Building Regulations (Northern Ireland) Technical Booklet K [22], and in Technical Bulletin 005 Gas cookers in internal kitchens – Ventilation requirements *[14], [15], [16].*

9.4 Food technology classrooms

Where cooking appliances are installed in food technology classrooms, ventilation shall be provided in accordance with IGEM/UP/11 *Gas installations for educational establishments*.

10 Flueing

The installation of a cooking range requiring flueing shall be in accordance with the appliance manufacturer's instructions. Where these give no specific advice, the installation shall be in accordance with the requirements of BS 5440-1.

*COMMENTARY ON CLAUSE **10***
The Asbestos (Prohibition) Regulations 1992 [10], as amended by the Asbestos (Prohibition) (Amendment) Regulations 1999 and 2003 [11] and [12], place restrictions on the use of asbestos materials, including a total ban of asbestos cement and its products. Existing chimney systems may only be re-used in situ provided they are mechanically sound and the requirements and working procedures in BS 5440-1 are met.

11 Gas connections

11.1 General

11.1.1 Only gas installation pipes and connectors of sufficient size to maintain the maximum heat input of a cooking appliance, as specified by the appliance manufacturer, shall be used.

11.1.2 A cooking range (see **3.4**) shall be connected to the termination point with rigid pipework.

11.1.3 A gas hob shall be connected to the termination point by means of rigid pipework or, unless stated otherwise in the manufacturer's instructions, a flexible connector and self-sealing plug-in device conforming to BS 669-1.

11.1.4 Connections for a free-standing cooker shall be by means of a flexible connector and self-sealing plug-in device conforming to BS 669-1 or rigid pipework.

11.1.5 Any flexible connector shall not be subjected to direct exposure to hot flue products or to contact with hot surfaces (see also **11.4**).

11.1.6 Where rigid pipework is used, an isolation valve with means of disconnection between the isolation valve and the appliance shall be provided.

11.2 Connections for 2nd family gases

11.2.1 The gas installation pipe to the termination point shall conform to BS 6891 or IGEM/UP/2, as appropriate.

11.2.2 Any flexible connector shall conform to BS 669-1.

*COMMENTARY ON **11.2.2***
The flexible connector should be installed such that it cannot be subjected to undue forces either in anticipated normal use or whilst being connected or disconnected.

*The flexible connector should be positioned in such a way that it will not suffer mechanical damage by being trapped by a stability device (see Clause **12**).*

A typical flexible connector is shown in Figure 2A.

11.2.3 The location of the termination point shall be in accordance with the cooking appliance manufacturer's instructions, where this is specified.

*COMMENTARY ON **11.2.3***
The termination point should be permanently attached to a firmly fixed gas installation pipe and positioned such that the flexible connector hose hangs freely downwards (see Figure 2A and Figure 2B). The termination point should be securely fixed to the wall by means of a backplate adaptor or suitable alternative. The termination point should be securely fixed to the wall immediately behind the appliance at a height of approximately 750 mm from the floor, unless otherwise specified by the manufacturer.

The termination point should be accessible for disconnection after moving the cooking appliance.

Figure 2A **Typical flexible connector**

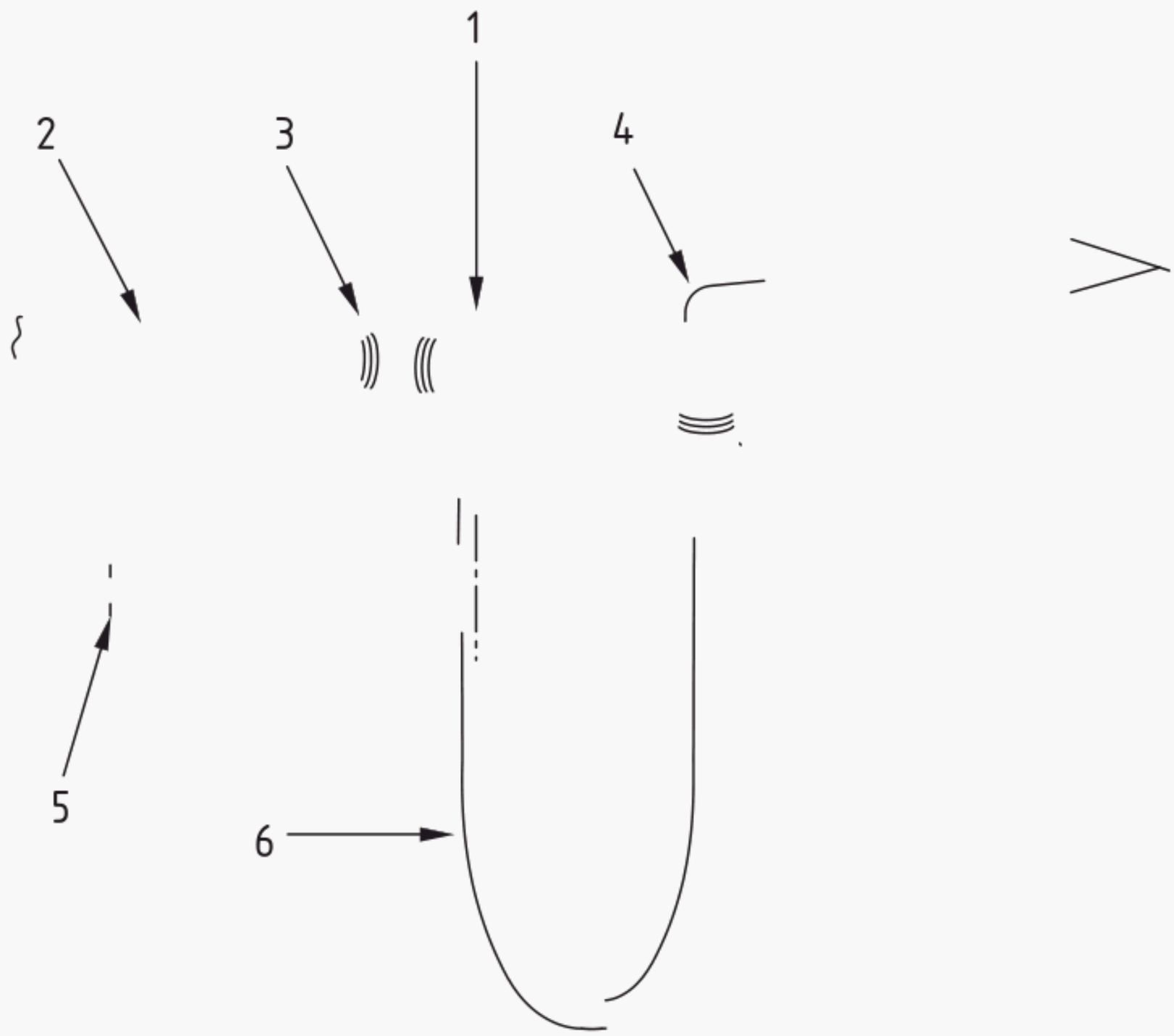

Key

1 Right-angled bayonet socket incorporating spring loaded-valve
2 Copper pipe
3 Adaptor backplate
4 Female elbow (malleable iron)
5 Alternative backplate elbow
6 Cooker hose with bayonet fixing

Figure 2B **Guidance on installation of flexible connectors**

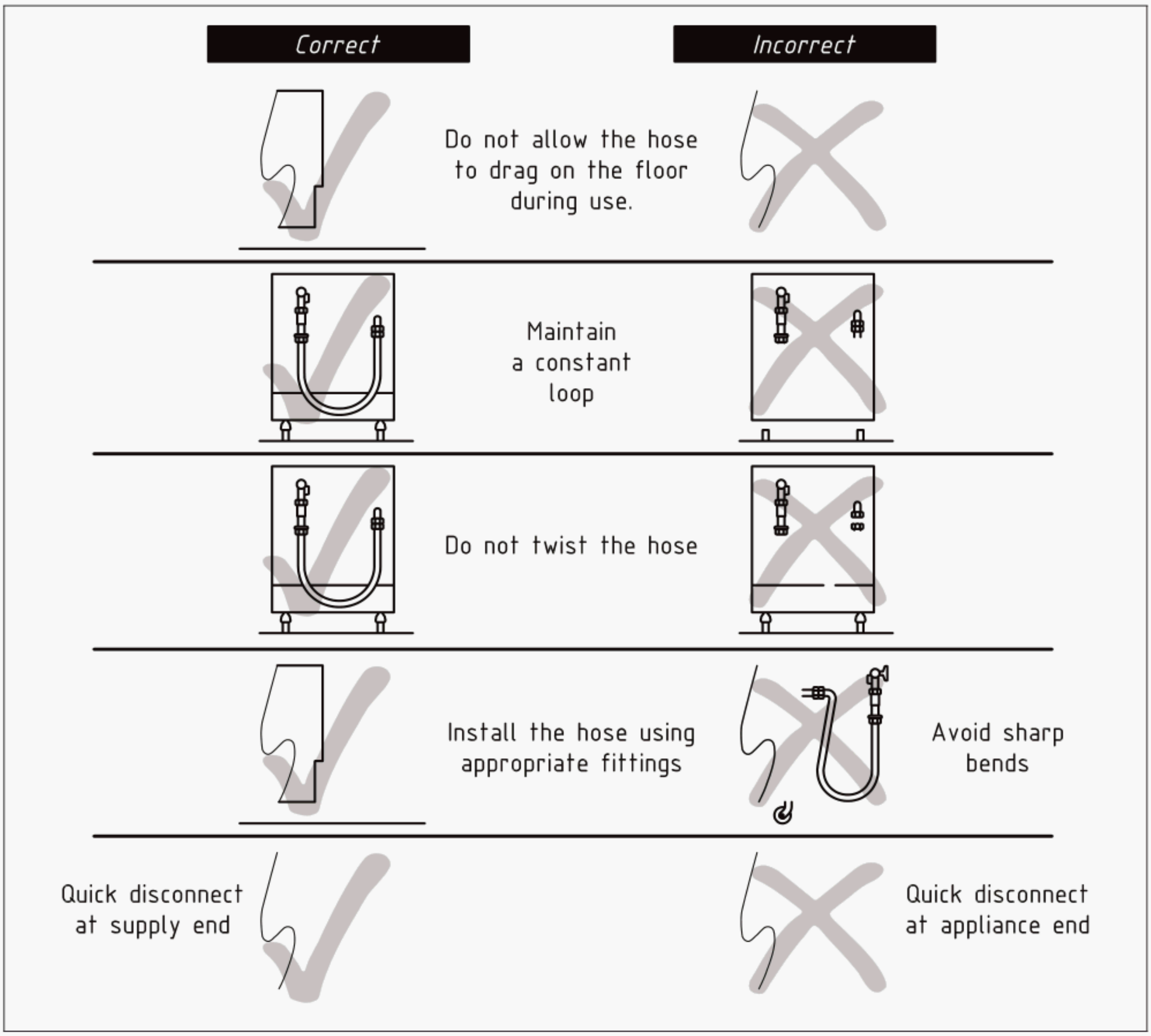

11.3 Connections for 3rd family gases

11.3.1 The gas installation pipes to the termination point shall be in accordance with BS 5482-1 or IGEM/UP/2, as appropriate.

11.3.2 The means of connection shall be either by a flexible connector specifically designed for use with 3rd family gases or by rigid pipework.

*COMMENTARY ON **11.3.2***
Typical flexible connectors are shown in Figure 2A. See also Figure 2B for guidance on installation of flexible connectors.

Flexible connectors for 2nd family gases are not necessarily suitable for 3rd family gases. Connectors for 3rd family gases are normally marked with a red stripe along their length.

11.4 Temperature limitation of flexible connectors

A cooking appliance giving a temperature rise greater than 70 °C in areas likely to come into contact with the flexible connector shall be connected in accordance with the manufacturer's instructions.

*COMMENTARY ON **11.4***
If the cooking appliance is not certificated as conforming to one of BS 5386-3, BS 5386-4, BS EN 30-1-1, BS EN 30-1-2, BS EN 30-1-3 or BS EN 30-2-2, or is not labelled to indicate its surface temperature, it should be connected by rigid pipework.

The manufacturer's installation instructions should be consulted to establish whether a gas cooking appliance gives a temperature rise greater than 70 °C.

12 Stability devices

Unless otherwise stated in the manufacturer's instructions, a free-standing cooking appliance using a flexible connector shall be fitted with a stability device firmly secured to the fabric of the building.

*COMMENTARY ON CLAUSE **12***
Two typical stability devices are shown in Figure 3.

In the arrangement illustrated in Figure 3a), the bracket should be adjusted to give the smallest practical clearance between the bracket and the bottom of the engagement slot in the rear of the cooker. For that illustrated in Figure 3b), the stability chain should be kept as short as practicable and fixed firmly to the rear of the cooker.

Figure 3 **Typical methods of provision of cooker stability**

All dimensions are in millimetres

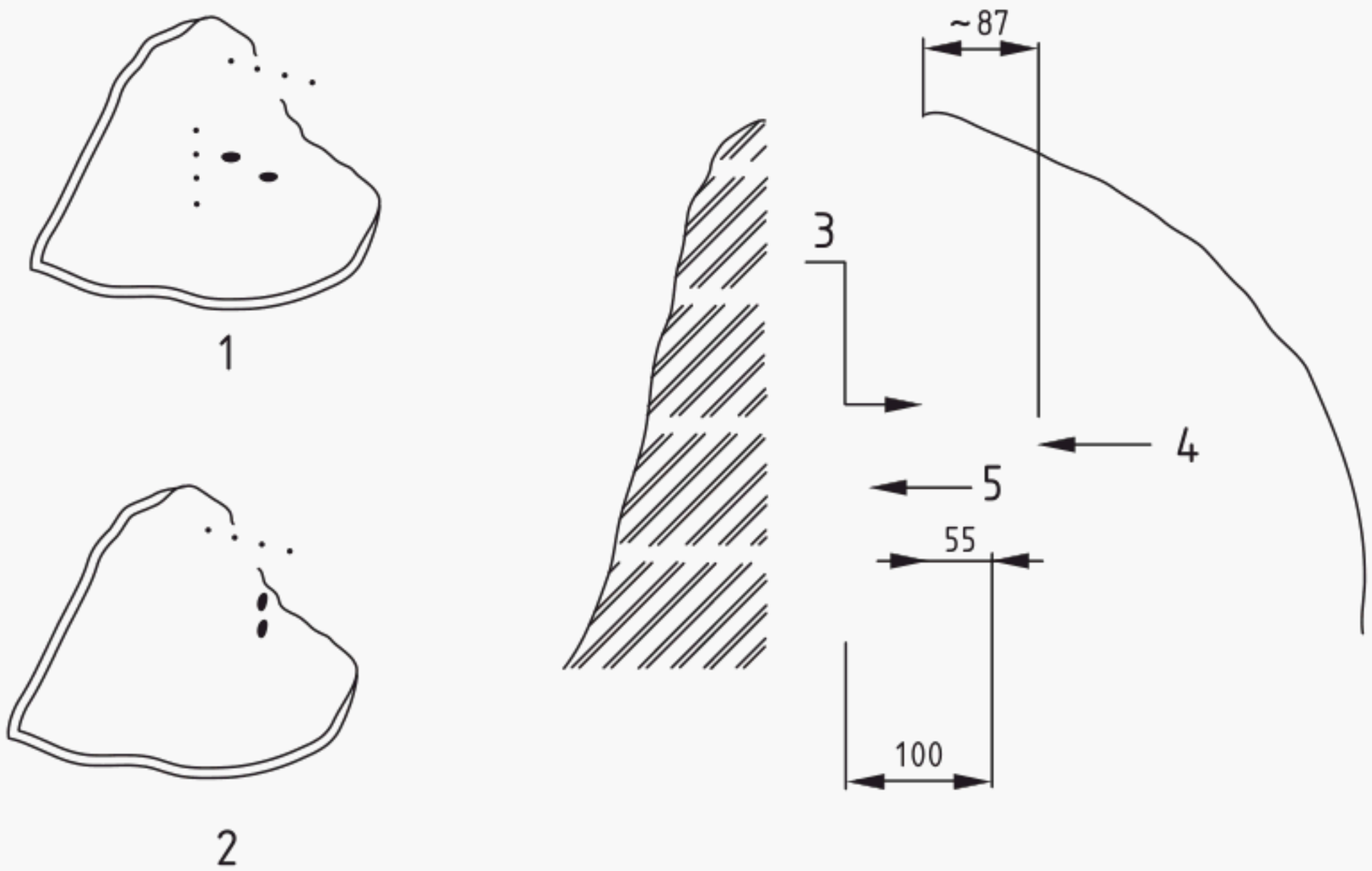

Key

1 Floor fixing
2 Wall fixing
3 Engagement slot
4 Clearance between bracket and bottom of engagement slot in rear of cooker
5 Stability bracket

a) Cooker stability bracket (for cookers specifically designed with a bracket engagement slot)

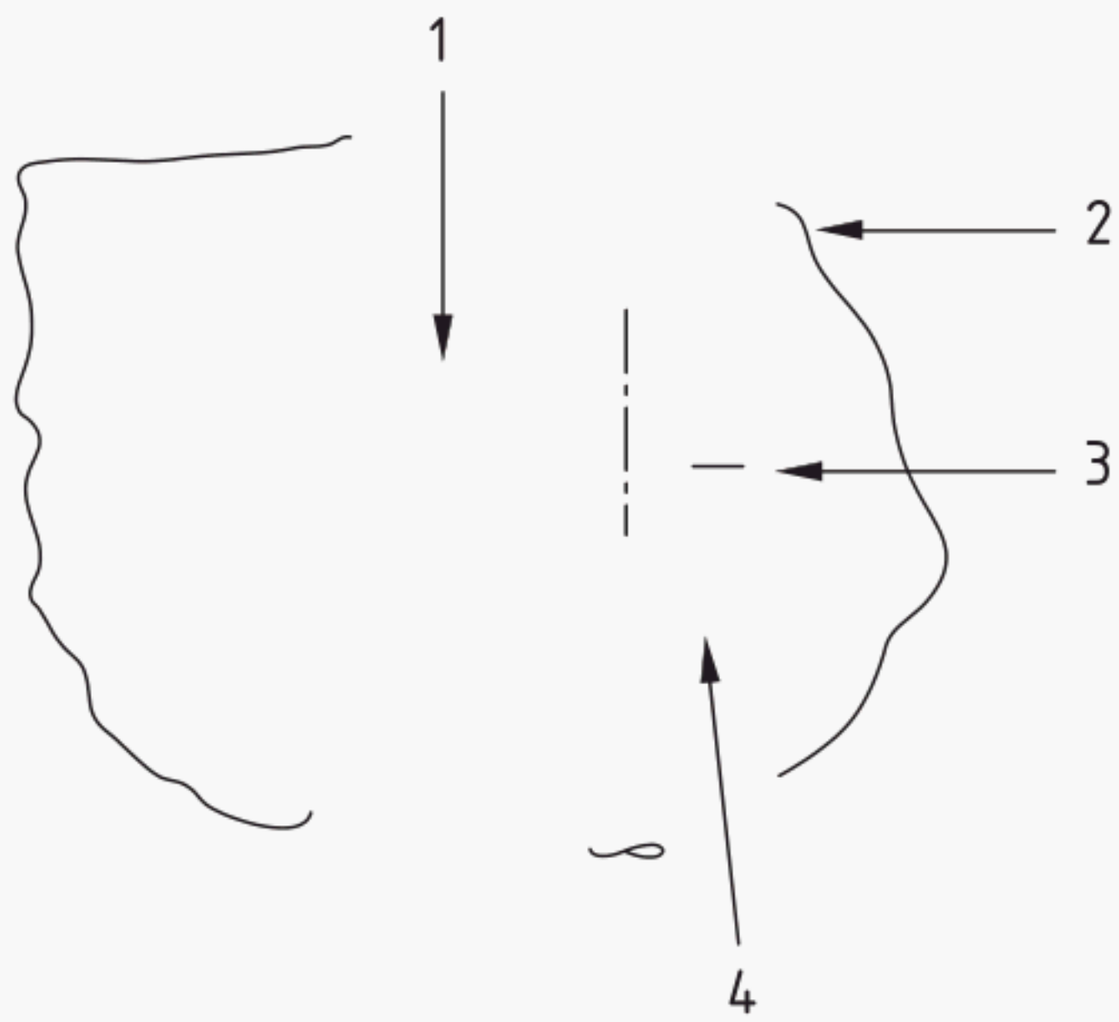

Key

1 Stability hook
2 Rear of cooker
3 Nut fixing chain firmly to rear of cooker
4 Stability chain

b) Cooker stability chain (for cookers not designed with a bracket engagement slot)

13 Electrical supplies and wiring

13.1 The electrical wiring installation to the cooking appliance shall conform to BS 7671.

13.2 Electrical supplies to the cooking appliance shall be in accordance with the cooking appliance manufacturer's instructions. Only electrical components designed for use with the electrical supply voltage and of a rating sufficient to carry the electrical current required by the operation of the equipment shall be used.

13.3 Fuses shall be rated in accordance with the cooking appliance manufacturer's instructions.

13.4 The point of connection to the mains electricity supply shall be readily accessible and the method of connection shall provide electrical isolation of the cooking appliance by means of:

a) a fused three-pin plug and a shuttered socket-outlet; or

b) a fused double pole switch or a switched fused spur; or

c) a dedicated circuit fused at the appropriate rating with the appliance supplied via a double pole switch or cooker control unit with at least 3 mm contact separation at all poles.

*COMMENTARY ON **13.4***
Where a three-pin plug is used, this should be removed from the socket when the cooking appliance is being serviced. To encourage this, an unswitched socket should be used.

13.5 The cable, plug, socket, switched fused spur, double pole switch or control unit shall not be in contact with hot surfaces or directly exposed to products of combustion.

*COMMENTARY ON **13.5***
Further advice on electrical installations in kitchens can be found in the Electrician's Guide to the Building Regulations *[23].*

14 Commissioning

14.1 The cooking appliance shall be commissioned in accordance with the manufacturer's instructions. Where these give no specific advice with regard to flueing and ventilation, commissioning shall be in accordance with the requirements of BS 5440-1 and BS 5440-2, as appropriate.

14.2 All gas fittings forming part of the installation shall be tested for tightness and purged in accordance with IGE/UP/1, IGE/UP/1A, IGE/UP/1B, BS 5482-1 or UKLPG UIS 014, as appropriate.

14.3 The burners shall be lit and the operating gas pressure checked in accordance with the cooking appliance manufacturer's instructions.

14.4 The operation of heating elements, control systems and safety devices shall be checked in accordance with the cooking appliance manufacturer's instructions.

14.5 The operation of any chimney shall be checked in accordance with the cooking appliance manufacturer's instructions to ensure that all combustion products are being safely removed. Where the manufacturer's instructions give no specific advice, reference shall be made to BS 5440-1.

14.6 The effect of any extract or recirculatory fans on the safe operation of the cooking appliance shall be checked.

15 Advice to be given to the user

15.1 Operating instructions

The correct operation of the cooking appliance and of any safety controls shall be demonstrated to the owner or occupier of the premises in which the cooking appliance is installed.

*COMMENTARY ON **15.1***
Some open-flued cooking appliances are fitted with a flue spillage or atmosphere-sensing device designed to shut them down under fault conditions. The owner or occupier of the premises in which the cooking appliance is installed should be informed of the need to call an operative to rectify the fault and reset the control.

An independently mounted carbon monoxide detector having an audible alarm (conforming to BS EN 50291) may be fitted in a room containing a gas cooker to give reassurance to the user, but a detector should not be regarded as a substitute for correct installation and regular servicing of the cooker by a competent person. The detector should be mounted in accordance with the detector manufacturer's instructions and the installation should conform to BS EN 50292, which states that the detector should not be mounted directly above or close to the cooker, or anywhere that could expose it to excessive heat or humidity.

Attention is drawn to the Gas Safety (Installation and Use) Regulations [1], which require the installer to leave for the use of the owner or occupier of premises in which a gas cooking appliance is installed all the manufacturer's instructions.

15.2 Maintenance

If the premises in which a cooking appliance is installed are owned by the occupier, the occupier shall be advised in writing that, for continued efficient and safe operation of the cooking appliance, it is important that adequate and regular maintenance is carried out by a competent person in accordance with the cooking appliance manufacturer's recommendations.

If the premises are tenanted and the landlord owns the cooking appliance, the landlord shall be advised in writing of the duty imposed by the Gas Safety (Installation and Use) Regulations [1] to ensure that the cooking appliance is maintained in a safe condition and checked for safety every 12 months.

*COMMENTARY ON **15.2***
The Gas Safety (Installation and Use) Regulations [1] impose a general obligation, with certain exceptions, on landlords providing cooking appliances in tenanted premises to have these checked for safety every 12 months.

Where an independently mounted carbon monoxide detector (e.g. one conforming to BS EN 50291) is fitted in, or recommended for, a room containing a gas appliance, the operative should advise the user that a detector should not be regarded as a substitute for proper installation and regular servicing by a competent person.

Where any defects that cannot be rectified are identified as part of any maintenance or safety check activity, reference should be made to the requirements of the Gas Industry Unsafe Situations Procedure [24].

15.3 Servicing and maintenance

Servicing and maintenance of the cooking appliance and system shall be carried out in accordance with the appliance manufacturer's instructions.

Where the manufacturer's instructions require the combustion performance to be checked, the operatives shall have access to a calibrated electronic portable combustion gas analyser, conforming to BS 7927 or BS EN 50379-3 and shall be competent in its use and the interpretation of any reading obtained.

NOTE 1 This competence can be demonstrated, for example, by satisfactory completion of the Nationally Accredited Certification Scheme for Individual Gas Fitting Operatives (ACS) CPA1 assessment, which covers the use of these electronic portable combustion gas analysers in accordance with BS 7967-1 to -4.

NOTE 2 BS 7927 has been withdrawn and superseded by BS EN 50379. However, portable gas analysers which have been made to BS 7927 remain in use and are still acceptable.

*COMMENTARY ON **15.3***
Where any defects that cannot be rectified are identified as part of any maintenance or safety check activity, reference should be made to the requirements of the Gas Industry Unsafe Situations Procedure [24].

Bibliography

Standards publications

For dated references, only the edition cited applies. For undated references, the latest edition of the referenced document (including any amendments) applies.

BS 5386-3 (withdrawn), *Specification for gas burning appliances – Domestic cooking appliances burning gas*

BS 5386-4 (withdrawn), *Specification for gas burning appliances – Built-in domestic cooking appliances*

BS 6173, *Specification for installation and maintenance of gas-fired catering appliances for use in all types of catering establishments (2nd and 3rd family gases)*

BS 6798, *Specification for installation and maintenance of gas-fired boilers of rated input not exceeding 70 kW net*

BS 7967-1, *Carbon monoxide in dwellings and the combustion performance of gas fired appliances – Part 1: Guide for identifying and managing sources of fumes, smells, spillage/leakage of combustion products and carbon monoxide detector activation*

BS 7967-2, *Carbon monoxide in dwellings and the combustion performance of gas fired appliances – Part 2: Guide for using electronic portable combustion gas analysers in the measurement of carbon monoxide and the determination of combustion performance*

BS 7967-3, *Carbon monoxide in dwellings and the combustion performance of gas fired appliances – Part 3: Guide for responding to measurements obtained from electronic portable gas analysers*

BS 7967-4, *Carbon monoxide in dwellings and the combustion performance of gas fired appliances – Part 4: Guide for using electronic portable gas analysers as part of the process of servicing and maintenance of gas-fired appliances*

BS EN 30-1-1, *Domestic cooking appliances burning gas – Part 1-1: Safety – General*

BS EN 30-1-2, *Domestic cooking appliances burning gas – Part 1-2: Safety – Appliances having forced convection ovens and/or grills*

BS EN 30-1-3, *Domestic cooking appliances burning gas – Part 1-3: Safety – Appliances having a glass ceramic hotplate*

BS EN 30-2-2, *Domestic cooking appliances burning gas – Part 2-2: Rational use of energy – Appliances having forced convection ovens and/or grills*

BS EN 50291, *Electrical apparatus for the detection of carbon monoxide in domestic premises – Test methods and performance requirements*

BS EN 50292, *Electrical apparatus for the detection of carbon monoxide in domestic premises – Guide on the selection, installation, use and maintenance*

DD 221, *General guidance for the marking of gas appliances*

Other publications

[1] GREAT BRITAIN. The Gas Safety (Installation and Use) Regulations 1998, SI 1998, No. 2451, London: The Stationery Office.

[2] NORTHERN IRELAND. The Gas Safety (Installation and Use) Regulations (Northern Ireland) 2004, SR 2004, No. 63, Belfast: The Stationery Office.

[3] STATES OF GUERNSEY. The Health and Safety (Gas)(Guernsey) Ordnance 2006. Guernsey: States of Guernsey Health and Safety Executive.

[4] GREAT BRITAIN. The Gas Appliances (Safety) Regulations 1995, SI 1995, No. 1629, London: HMSO.

[5] GREAT BRITAIN. The Gas Cooking Appliances (Safety) Regulations 1989, SI 1989, No. 149, London: HMSO.

[6] GREAT BRITAIN. The Building Regulations 2000, (for England and Wales) SI 2000, No. 2531, as amended, London: The Stationery Office.

[7] SCOTLAND. The Building Standards (Scotland) Regulations 2004, as amended, Scottish Statutory Instruments 506 2004, Edinburgh: The Stationery Office.

[8] GREAT BRITAIN. The Building (Amendment) Regulations (Northern Ireland) 2006. SR 2006, No. 355, Belfast: The Stationery Office.

[9] GREAT BRITAIN. The Gas Safety (Installation and Use) Regulations 1994. SI 1994, No. 1886, London: HMSO, as amended and applied by the ISLE OF MAN Gas Safety (Application) Order 1996.

[10] GREAT BRITAIN. The Asbestos (Prohibitions) Regulations 1992, SI 1992, No. 3067, as amended, London: The Stationery Office.

[11] GREAT BRITAIN. The Asbestos (Prohibitions) (Amendment) (No.2) Regulations 1999, SI 1999, No. 2977, London: The Stationery Office.

[12] GREAT BRITAIN. The Asbestos (Prohibitions) (Amendment) Regulations 2003, SI 2003, No. 1889, London: The Stationery Office.

[13] INSTITUTION OF GAS ENGINEERS AND MANAGERS. IGEM/G/6, *Gas supplies to mobile dwellings*, Kegworth: IGEM, 2009.

[14] GAS SAFE REGISTER. Technical Bulletin 005(A). *Gas cookers in internal kitchens – Ventilation requirements as applied to England, Wales, the Isle of Man and Guernsey*. Basingstoke: Gas Safe Register, 2010.

[15] GAS SAFE REGISTER. Technical Bulletin 005(B). *Gas cookers in internal kitchens – Ventilation requirements as applied to Scotland*. Basingstoke: Gas Safe Register, 2010.

[16] GAS SAFE REGISTER. Technical Bulletin 005(C). *Gas cookers in internal kitchens – Ventilation requirements as applied to Northern Ireland*. Basingstoke: Gas Safe Register, 2010.

[17] HEALTH AND SAFETY COMMISSION. *Standards of training in safe gas installation. Approved Code of Practice (ACoP)* (COP20). London: HSE Books, 1996.

[18] INSTITUTION OF GAS ENGINEERS AND MANAGERS. IGE/G/5 *Gas in flats and other multidwelling buildings.* Kegworth: IGEM, 2006.

[19] EUROPEAN COMMUNITIES. Council Directive 90/396/EEC of 29 June 1990 on the approximation of the laws of the Member States relating to appliances burning gaseous fuels, Luxembourg: Office for Official Publications of the European Communities, 1997 (OJ No. L196, 26.07.1990).

[20] THE STATIONERY OFFICE. *Building Regulations 2000 Approved Document F: Ventilation*, London: TSO, 2010.

[21] SCOTTISH BUILDING STANDARDS AGENCY. Technical Handbook Domestic. Edinburgh: TSO, 2007.

[22] NORTHERN IRELAND DEPARTMENT OF THE ENVIRONMENT. *The Building Regulations (Northern Ireland) 1994 Technical Booklet K Ventilation 1999* (as amended). Belfast: The Stationery Office.

[23] COOK, P. *Electrician's Guide to the Building Regulations Part P*, 2nd Edition. London:IEE, 2008.

[24] GAS SAFE REGISTER. Technical Bulletin 001: *The gas industry unsafe situations procedure (GIUSP) – Dealing with unsafe situations in customers' premises*, 6th edition. Basingstoke: Gas Safe Register, 2009.

This page deliberately left blank

This page deliberately left blank

NO COPYING WITHOUT BSI PERMISSION EXCEPT AS PERMITTED BY COPYRIGHT LAW

British Standards Institution (BSI)

BSI is the national body responsible for preparing British Standards and other standards-related publications, information and services.

BSI is incorporated by Royal Charter. British Standards and other standardization products are published by BSI Standards Limited.

About us

We bring together business, industry, government, consumers, innovators and others to shape their combined experience and expertise into standards -based solutions.

The knowledge embodied in our standards has been carefully assembled in a dependable format and refined through our open consultation process. Organizations of all sizes and across all sectors choose standards to help them achieve their goals.

Information on standards

We can provide you with the knowledge that your organization needs to succeed. Find out more about British Standards by visiting our website at bsigroup.com/standards or contacting our Customer Services team or Knowledge Centre.

Buying standards

You can buy and download PDF versions of BSI publications, including British and adopted European and international standards, through our website at bsigroup.com/shop, where hard copies can also be purchased.

If you need international and foreign standards from other Standards Development Organizations, hard copies can be ordered from our Customer Services team.

Subscriptions

Our range of subscription services are designed to make using standards easier for you. For further information on our subscription products go to bsigroup.com/subscriptions.

With **British Standards Online (BSOL)** you'll have instant access to over 55,000 British and adopted European and international standards from your desktop. It's available 24/7 and is refreshed daily so you'll always be up to date.

You can keep in touch with standards developments and receive substantial discounts on the purchase price of standards, both in single copy and subscription format, by becoming a **BSI Subscribing Member**.

PLUS is an updating service exclusive to BSI Subscribing Members. You will automatically receive the latest hard copy of your standards when they're revised or replaced.

To find out more about becoming a BSI Subscribing Member and the benefits of membership, please visit bsigroup.com/shop.

With a **Multi-User Network Licence (MUNL)** you are able to host standards publications on your intranet. Licences can cover as few or as many users as you wish. With updates supplied as soon as they're available, you can be sure your documentation is current. For further information, email bsmusales@bsigroup.com.

Revisions

Our British Standards and other publications are updated by amendment or revision.

We continually improve the quality of our products and services to benefit your business. If you find an inaccuracy or ambiguity within a British Standard or other BSI publication please inform the Knowledge Centre.

Copyright

All the data, software and documentation set out in all British Standards and other BSI publications are the property of and copyrighted by BSI, or some person or entity that owns copyright in the information used (such as the international standardization bodies) and has formally licensed such information to BSI for commercial publication and use. Except as permitted under the Copyright, Designs and Patents Act 1988 no extract may be reproduced, stored in a retrieval system or transmitted in any form or by any means – electronic, photocopying, recording or otherwise – without prior written permission from BSI. Details and advice can be obtained from the Copyright & Licensing Department.

Useful Contacts:

Customer Services
Tel: +44 845 086 9001
Email (orders): orders@bsigroup.com
Email (enquiries): cservices@bsigroup.com

Subscriptions
Tel: +44 845 086 9001
Email: subscriptions@bsigroup.com

Knowledge Centre
Tel: +44 20 8996 7004
Email: knowledgecentre@bsigroup.com

Copyright & Licensing
Tel: +44 20 8996 7070
Email: copyright@bsigroup.com

BSI Group Headquarters

389 Chiswick High Road London W4 4AL UK

bsi.

...making excellence a habit.™