BS EN 62739-3:2017

BSI Standards Publication

Test method for erosion of wave soldering equipment using molten lead- free solder alloy

Part 3: Selection guidance of erosion test methods

Licensed copy: IP Login, University of Oxford, Version correct as of

bsi.

EUROPEAN STANDARD

NORME EUROPÉENNE

EUROPÄISCHE NORM

EN 62739-3

March 2017

ICS 31.190; 31.240

English Version

Test method for erosion of wave soldering equipment using molten lead-free solder alloy - Part 3: Selection guidance of erosion test methods (IEC 62739-3:2017)

Méthode d'essai de l'érosion de l'équipement de brasage à la vague utilisant un alliage à braser sans plomb fondu - Partie 3: Document d'orientation pour le choix des méthodes d'essai d'érosion (IEC 62739-3:2017)

Verfahren zur Erosionsprüfung für Wellenlötausrüstungen bei Verwendung von geschmolzener, bleifreier Lotlegierung - Teil 3: Leitfaden für die Auswahl von Verfahren zur Erosionsprüfung (IEC 62739-3:2017)

This European Standard was approved by CENELEC on 2017-02-10. CENELEC members are bound to comply with the CEN/CENELEC Internal Regulations which stipulate the conditions for giving this European Standard the status of a national standard without any alteration.

Up-to-date lists and bibliographical references concerning such national standards may be obtained on application to the CEN-CENELEC Management Centre or to any CENELEC member.

This European Standard exists in three official versions (English, French, German). A version in any other language made by translation under the responsibility of a CENELEC member into its own language and notified to the CEN-CENELEC Management Centre has the same status as the official versions.

CENELEC members are the national electrotechnical committees of Austria, Belgium, Bulgaria, Croatia, Cyprus, the Czech Republic, Denmark, Estonia, Finland, Former Yugoslav Republic of Macedonia, France, Germany, Greece, Hungary, Iceland, Ireland, Italy, Latvia, Lithuania, Luxembourg, Malta, the Netherlands, Norway, Poland, Portugal, Romania, Serbia, Slovakia, Slovenia, Spain, Sweden, Switzerland, Turkey and the United Kingdom.

CENELEC

European Committee for Electrotechnical Standardization
Comité Européen de Normalisation Electrotechnique
Europäisches Komitee für Elektrotechnische Normung

CEN-CENELEC Management Centre: Avenue Marnix 17, B-1000 Brussels

© 2017 CENELEC All rights of exploitation in any form and by any means reserved worldwide for CENELEC Members.

Ref. No. EN 62739-3:2017 E

Licensed copy: IP Login, University of Oxford, Version correct as of 04/08/2018

EN 62739-3:2017

European foreword

The text of document 91/1368/CDV, future edition 1 of IEC 62739-3, prepared by IEC/TC 91 "Electronics assembly technology" was submitted to the IEC-CENELEC parallel vote and approved by CENELEC as EN 62739-3:2017.

The following dates are fixed:

• latest date by which the document has to be implemented at national level by publication of an identical national standard or by endorsement	(dop)	2017-11-10
• latest date by which the national standards conflicting with the document have to be withdrawn	(dow)	2020-02-10

Attention is drawn to the possibility that some of the elements of this document may be the subject of patent rights. CENELEC [and/or CEN] shall not be held responsible for identifying any or all such patent rights.

Endorsement notice

The text of the International Standard IEC 62739-3:2017 was approved by CENELEC as a European Standard without any modification.

Licensed copy: IP Login, University of Oxford, Version correct as of 04/08/2018

Annex ZA
(normative)

Normative references to international publications with their corresponding European publications

The following documents, in whole or in part, are normatively referenced in this document and are indispensable for its application. For dated references, only the edition cited applies. For undated references, the latest edition of the referenced document (including any amendments) applies.

NOTE 1 When an International Publication has been modified by common modifications, indicated by (mod), the relevant EN/HD applies.

NOTE 2 Up-to-date information on the latest versions of the European Standards listed in this annex is available here: www.cenelec.eu

Publication	Year	Title	EN/HD	Year
IEC 60068-2-20	2008	Environmental testing - Part 2-20: Tests - Test T: Test methods for solderability and resistance to soldering heat of devices with leads	EN 60068-2-20	2008
IEC 61190-1-3	-	Attachment materials for electronic assembly - Part 1-3: Requirements for electronic grade solder alloys and fluxed and non-fluxed solid solders for electronic soldering applications	EN 61190-1-3	-
IEC 62739-1	2013	Test method for erosion of wave soldering equipment using molten lead-free solder alloy - Part 1: Erosion test method for metal materials without surface processing	EN 62739-1	2013
IEC 62739-2	-	Test method for erosion of wave soldering equipment using molten lead-free solder alloy - Part 2: Erosion test method for metal materials with surface processing	EN 62739-2	-

Licensed copy: IP Login, University of Oxford, Version correct as of 04/08/2018

CONTENTS

FOREWORD 4
1 Scope 6
2 Normative references 6
3 Terms and definitions 6
4 General remarks 7
5 Selection of the appropriate erosion test method 8
5.1 Correlation between test methods and stresses induced in the field 8
5.2 Recommended test method by materials 9
6 Common items for each test method 10
6.1 Specimen preparation 10
6.2 Solder alloy 10
6.3 Accelerated stress conditions 10
6.3.1 Test temperature 10
6.3.2 Rotation speed 10
6.3.3 Bending stress to the specimen 11
6.4 Dross 11
6.4.1 Dross generation and removal interval 11
6.4.2 Dross removal method 11
6.4.3 Molten solder volume after dross removal 11
6.5 Erosion depth measurement method 11
6.5.1 Post test treatment 11
6.5.2 Local erosion depth 12
6.5.3 General (uniform) erosion depth 13
6.5.4 Evaluation 14
7 Overview of the test methods 14
7.1 Test methods 14
7.2 Metal material without surface processing 14
7.2.1 General 14
7.2.2 Rotation test at 350 °C 15
7.3 Metal material with surface processing 16
7.3.1 Test method 16
7.3.2 Rotation test at 450 °C 16
7.3.3 Rotation test at 450 °C with 2 mm bending 17
Annex A (informative) Selection of test temperature, test duration and bending stress 18
A.1 Specimen without surface processing 18
A.2 Specimen with surface processing 20
Annex B (informative) Maximum depth and other measurements 23
B.1 General 23
B.2 Maximum depth measurement 23
Annex C (informative) Erosion mechanism 26
C.1 Specimen without surface processing 26
C.2 Specimen with surface processing 26
C.3 Further guidance 27
Annex D (informative) Thermal acceleration for erosion 28
D.1 Specimen without surface processing 28
D.2 Specimen with surface processing 28

Licensed copy: IP Login, University of Oxford, Version correct as of 04/08/2018

D.3 Further guidance document 30
Bibliography 31

Figure 1 – Schematic example of wave soldering equipment 8
Figure 2 – Example of dross removal tool 11
Figure 3 – Schematic general definition of erosion depth 12
Figure 4 – Schematic definition of erosion depth by focal depth method 12
Figure 5 – Examples of local erosion 13
Figure 6 – Example of evaluation region 13
Figure 7 – Examples with non-erosion area 14
Figure 8 – Examples without a non-erosion area and an example of a cross section 14
Figure 9 – Configuration example of test equipment 15
Figure 10 – Configuration example of test equipment for rotation test at 450 °C with 2 mm bending 17
Figure A.1 – Specimen configuration for preliminary test 18
Figure A.2 – Erosion depth against molten solder temperature 19
Figure A.3 – Erosion depth against rotation speed 19
Figure A.4 – Erosion depth against immersion time 20
Figure C.1 – Erosion mechanism for material with nitriding 27
Figure D.1 – Tin (Sn) diffusion layer growth in the plasma nitriding layer for various stainless steel 29

Table 1 – Location of erosion in the field and examples of problems 8
Table 2 – Correlation between test methods and stresses induced in the field 9
Table 3 – Applicable test method depending on the materials 9
Table 4 – Test conditions for rotation test at 350 °C 16
Table 5 – Test conditions for rotation test at 350 °C 16
Table A.1 – Erosion test results for the materials of gas nitriding and nitrocarburizing 21
Table A.2 – Erosion test results for the materials of coating type surface processing 22
Table B.1 – Measurement methods, features and accuracy 24
Table B.2 – Example of measurement equipment 25
Table D.1 – Plasma nitriding layer peeling off period (incubation period in Figure D.1) 29
Table D.2 – Initial growth rate for tin (Sn) diffusion layer 30

Licensed copy: IP Login, University of Oxford, Version correct as of 04/08/2018

INTERNATIONAL ELECTROTECHNICAL COMMISSION

TEST METHOD FOR EROSION OF WAVE SOLDERING EQUIPMENT USING MOLTEN LEAD-FREE SOLDER ALLOY –

Part 3: Selection guidance of erosion test methods

Licensed copy: IP Login, University of Oxford, Version correct as of 04/08/2018

FOREWORD

1) The International Electrotechnical Commission (IEC) is a worldwide organization for standardization comprising all national electrotechnical committees (IEC National Committees). The object of IEC is to promote international co-operation on all questions concerning standardization in the electrical and electronic fields. To this end and in addition to other activities, IEC publishes International Standards, Technical Specifications, Technical Reports, Publicly Available Specifications (PAS) and Guides (hereafter referred to as "IEC Publication(s)"). Their preparation is entrusted to technical committees; any IEC National Committee interested in the subject dealt with may participate in this preparatory work. International, governmental and non-governmental organizations liaising with the IEC also participate in this preparation. IEC collaborates closely with the International Organization for Standardization (ISO) in accordance with conditions determined by agreement between the two organizations.
2) The formal decisions or agreements of IEC on technical matters express, as nearly as possible, an international consensus of opinion on the relevant subjects since each technical committee has representation from all interested IEC National Committees.
3) IEC Publications have the form of recommendations for international use and are accepted by IEC National Committees in that sense. While all reasonable efforts are made to ensure that the technical content of IEC Publications is accurate, IEC cannot be held responsible for the way in which they are used or for any misinterpretation by any end user.
4) In order to promote international uniformity, IEC National Committees undertake to apply IEC Publications transparently to the maximum extent possible in their national and regional publications. Any divergence between any IEC Publication and the corresponding national or regional publication shall be clearly indicated in the latter.
5) IEC itself does not provide any attestation of conformity. Independent certification bodies provide conformity assessment services and, in some areas, access to IEC marks of conformity. IEC is not responsible for any services carried out by independent certification bodies.
6) All users should ensure that they have the latest edition of this publication.
7) No liability shall attach to IEC or its directors, employees, servants or agents including individual experts and members of its technical committees and IEC National Committees for any personal injury, property damage or other damage of any nature whatsoever, whether direct or indirect, or for costs (including legal fees) and expenses arising out of the publication, use of, or reliance upon, this IEC Publication or any other IEC Publications.
8) Attention is drawn to the Normative references cited in this publication. Use of the referenced publications is indispensable for the correct application of this publication.
9) Attention is drawn to the possibility that some of the elements of this IEC Publication may be the subject of patent rights. IEC shall not be held responsible for identifying any or all such patent rights.

International Standard IEC 62739-3 has been prepared by IEC technical committee 91: Electronics assembly technology.

The text of this International Standard is based on the following documents:

The text of this standard is based on the following documents:

CDV	Report on voting
91/1368/CDV	91/1400/RVC

Full information on the voting for the approval of this International Standard can be found in the report on voting indicated in the above table.

This document has been drafted in accordance with the ISO/IEC Directives, Part 2.

A list of all the parts in the IEC 62739 series, under the general title *Test method for erosion of wave soldering equipment using molten lead-free solder alloy*, can be found on the IEC website.

The committee has decided that the contents of this document will remain unchanged until the stability date indicated on the IEC website under "http://webstore.iec.ch" in the data related to the specific document. At this date, the document will be

- reconfirmed,
- withdrawn,
- replaced by a revised edition, or
- amended.

A bilingual version of this publication may be issued at a later date.

Licensed copy: IP Login, University of Oxford, Version correct as of 04/08/2018

TEST METHOD FOR EROSION OF WAVE SOLDERING EQUIPMENT USING MOLTEN LEAD-FREE SOLDER ALLOY –

Part 3: Selection guidance of erosion test methods

Licensed copy: IP Login, University of Oxford, Version correct as of 04/08/2018

1 Scope

This part of IEC 62739 describes the selection methodology of an appropriate evaluating test method for the erosion of the metal materials without or with surface processing intended to be used for lead-free wave soldering equipment as a solder bath and other components which are in contact with the molten solder.

2 Normative references

The following documents are referred to in the text in such a way that some or all of their content constitutes requirements of this document. For dated references, only the edition cited applies. For undated references, the latest edition of the referenced document (including any amendments) applies.

IEC 60068-2-20:2008, *Environmental testing – Part 2-20: Tests – Test T: Test methods for solderability and resistance to soldering heat of devices with leads*

IEC 61190-1-3, *Attachment materials for electronic assembly – Part 1-3: Requirements for electronic grade solder alloys and fluxed and non-fluxed solid solder for electronic soldering applications*

IEC 62739-1:2013, *Test method for erosion of wave soldering equipment using molten lead-free solder alloy – Part 1: Erosion test method for metal materials without surface processing*

IEC 62739-2, *Test method for erosion of wave soldering equipment using molten lead-free solder alloy – Part 2: Erosion test method for metal materials with surface processing*

3 Terms and definitions

For the purposes of this document, the following terms and definitions apply.

ISO and IEC maintain terminological databases for use in standardization at the following addresses:

- IEC Electropedia: available at http://www.electropedia.org/
- ISO Online browsing platform: available at http://www.iso.org/obp

3.1
erosion
phenomenon where a base material is dissolved and made thinner by coming into contact with molten solder

[SOURCE: IEC 62739-1:2013, 3.1]

3.2
lead-free solder
alloy that does not contain more than 0,1 % mass fraction of lead (Pb) as its constituent and used for joining components to substrates or for coating surfaces

[SOURCE: IEC 60194:2015, 75.1904 modified – "mass fraction" is used instead of "weight" and "as its constituent" has been added]

3.3
dross
oxide and other contaminants that form on the surface of molten solder

[SOURCE: IEC 60194:2015, 75.0410]

4 General remarks

Figure 1 shows a schematic example of wave soldering equipment showing a solder bath and auxiliaries which are subjected to evaluation. Table 1 shows the location of the erosion in the field, and an example of the problems. The tests specified in IEC 62739-1 and IEC 62739-2 are intended to provide an appropriate maintenance inspection cycle and replacement period of a solder bath and other metal components, by assessing the anti-erosion capability of material and other metal components, including surface processing, subjected to solder baths.

Except for the duration, test conditions such as molten solder temperature and rotation speed, specified in IEC 62739-1 and IEC 6273-2, are predetermined. Thus, the erosion occurrence durations vary depending upon the type of metal and the surface processing employed. For this reason, an adequate test duration needs to be pre-set so as to clearly identify the non-erosion which is used as the baseline of the erosion depth by the focal depth method and which is also used to discriminate the type of metal and surface processing employed by erosion depth on the specimen.

Licensed copy: IP Login, University of Oxford, Version correct as of 04/08/2018

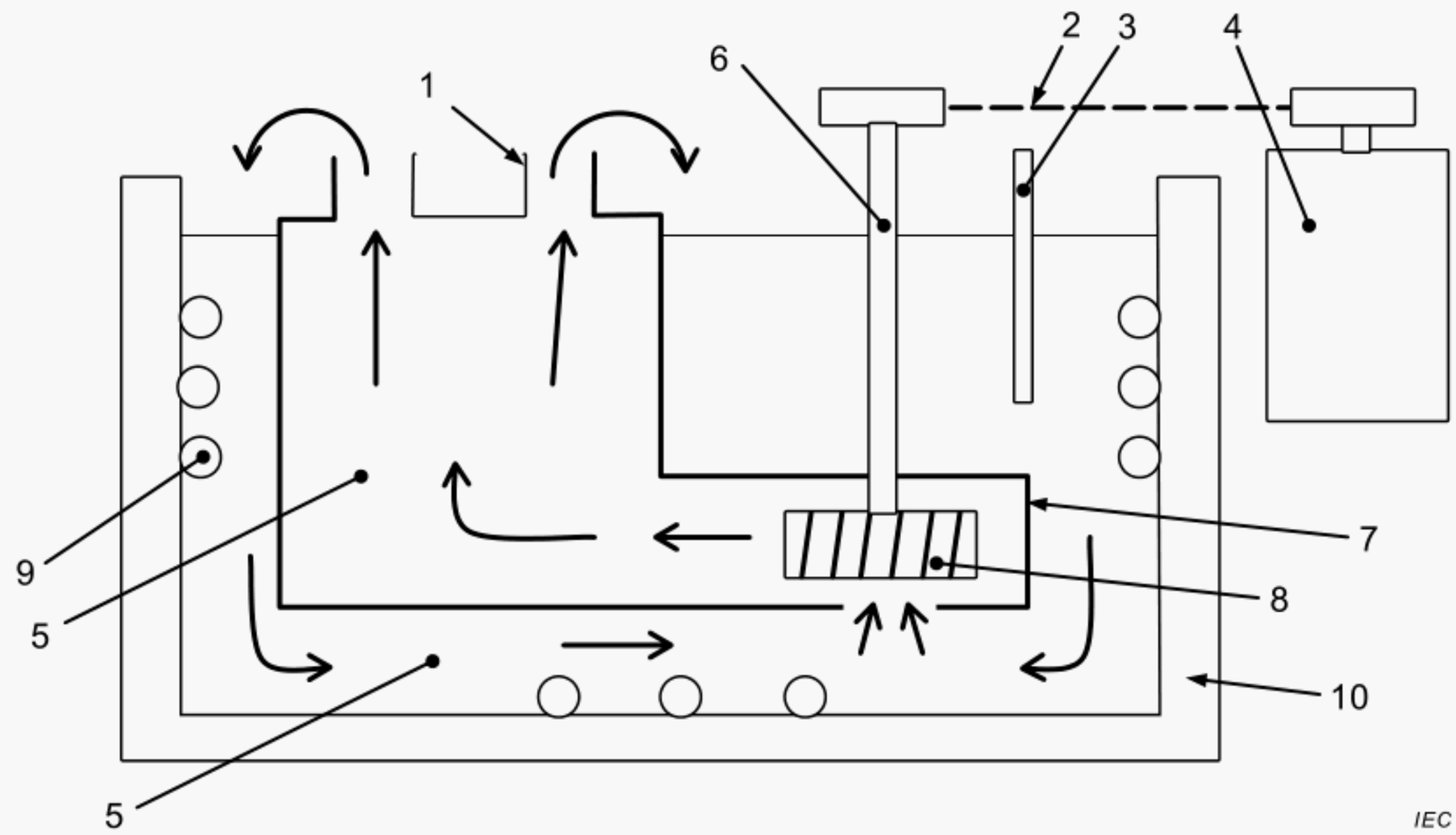

Key

1	Jet stream nozzle	6	Impeller shaft
2	Drive belt	7	Molten solder pump
3	Temperature sensor	8	Impeller
4	Motor	9	Heater
5	Molten solder	10	Solder bath

Molten solder flow directions are indicated by an arrow.

Figure 1 – Schematic example of wave soldering equipment

Table 1 – Location of erosion in the field and examples of problems

Location of erosion in the field	Example of problems
Solder bath inner wall	Hole, molten solder leaking
Impeller shaft	Thinning, impeller shaft breaking
Molten solder pump components such as impeller	Soldering defects due to molten solder jet stream disturbance
Jet stream nozzle	Soldering defects due to molten solder jet stream disturbance
Temperature sensor tube	Hole, unintentional molten solder temperature, insulation failure
Throw-in heater	Hole insulation failure, electricity leak

5 Selection of the appropriate erosion test method

5.1 Correlation between test methods and stresses induced in the field

Table 2 shows the correlation between test methods and stresses induced in the field, indicating the applicable material.

Licensed copy: IP Login, University of Oxford, Version correct as of 04/08/2018

Table 2 – Correlation between test methods and stresses induced in the field

Test method (Applicable standard)	Accelerated stress conditions	Applicable material	Stress induced in the field
Rotation test at 350 °C [a] (IEC 62739-1)	High temperature (350 °C) Molten lead-free solder flow Flux application	Metal material without surface processing	Assuming encroach due to solid metal fusion by high temperature molten lead-free solder. Assuming encroach due to chemical erosion by flux.
Rotation test at 450 °C [b] (IEC 62739-2)	High temperature (450 °C) Molten lead-free solder flow	Metal material with surface processing	Assuming encroach due to solid metal fusion by high temperature molten lead-free solder.
Rotation test at 450 °C with 2 mm bending [c] (IEC 62739-2)	High temperature (450 °C) Molten lead-free solder flow Bent stress (2 mm)	Metal material with surface processing	Assuming encroach due to solid metal fusion by high temperature molten lead-free solder. Assuming encroach acceleration by bending stress on the metal surface with surface processing.

[a] This test method is conducted at a suitable temperature for metal material without surface processing to produce appropriate erosion depth measurements. However, a sufficient test duration for each metal material shall be predefined. For metal material with surface processing, erosion occurrence duration becomes too long. Thus, this test method is not applicable for metal material with surface processing.

[b] This test method is conducted at a suitable temperature for metal material with surface processing to enable an appropriate erosion depth measurement. However, a sufficient test duration for each surface processing shall be predefined. For metal material without surface processing, erosion progresses so fast that a non-erosion area which is used for the baseline of the erosion depth cannot be obtained. Thus, this test method is not applicable for metal material without surface processing.

[c] This test method is suitable for metal material with surface processing when the rotation test at 450 °C takes too long and additional acceleration is required. However, a sufficient test duration for each surface processing shall be predefined. For metal material without surface processing, erosion progresses so fast that a non-erosion area which is used for the baseline of the erosion depth cannot be obtained. Thus, this test method is not applicable for metal material without surface processing.

5.2 Recommended test method by materials

Table 3 shows an appropriate test method depending on the material used with respect to solder baths and auxiliaries.

Table 3 – Applicable test method depending on the materials

Metal materials and surface processing		Applicable acceleration test method		
Metal material	Surface processing	Rotation test at 350 °C	Rotation test at 450 °C	Rotation test at 450 °C with 2 mm bending
SUS304	None	A	B	B
SUS316	None	A	B	B
Titan	None	A	B	B
Cast iron	None	A	B	B
SUS304, SUS316	Surface diffusion type	B	A	A
SUS304, SUS316	Coating type	B	A	A
"A" denotes recommended. "B " denotes not applicable.				

Licensed copy: IP Login, University of Oxford, Version correct as of 04/08/2018

Surface processing is classified as surface diffusion type which is forming a surface process layer by diffusing nitrogen (for example) into material and coating type which is forming a coating layer on the surface of the mater material. Examples of each type are given below.

a) Surface diffusion type: nitrogen supersaturated solid solution diffusion treatment, diffusion penetration nitriding, gas nitriding, nitrocarburizing, plasma nitriding

b) Coating type: fine ceramic coating by chemical densified process, CrN coating by a Physical Vapor Deposition (PVD) method, and alumina coating by thermal spray.

NOTE The erosion mechanism of the test is explained in Annex C.

Licensed copy: IP Login, University of Oxford, Version correct as of 04/08/2018

6 Common items for each test method

6.1 Specimen preparation

The specimens shall be prepared as indicated below.

a) Basically, specimen shaping shall be carried out by punching, using a press machine. However, for high hardness materials such as titan and cast iron which are not suitable for punching, shaving shall be used.

b) Specimen edge burrs, etc., which are produced during specimen shaping and may cause erosion, shall be removed by chamfering and such;

c) if necessary, surface processing shall be done after processes a) and b).

d) Care shall be taken to handle the specimen after fabrication, so as not to contaminate the specimen by oil, or other contaminants, since this could affect the test result.

6.2 Solder alloy

Unless otherwise specified, Sn96,5Ag3Cu,5 solder alloy specified in IEC 61190-1-3 shall be used. If Sn purity is too high, erosion occurs after a short time and inaccurate results may be the consequence.

6.3 Accelerated stress conditions

6.3.1 Test temperature

The test temperature is specified as 350 °C ± 3 °C in IEC 62739-1 and 450 °C ± 3 °C in IEC 62739-2. These test temperatures are determined so as to clearly identify the non-erosion area which is used for the baseline of the erosion depth by the focal depth method and to differentiate metal material and surface processing employed by erosion the depth on the specimen. A sufficient test duration for metal material shall be pre-set, suitable for each metal material and surface processing (see Annex A).

NOTE The thermal acceleration factor for erosion is explained in Annex D.

6.3.2 Rotation speed

The speed difference between molten solder alloy and the specimen by rotating the specimen is assuming the molten solder flow speed in the wave soldering equipment. A rotation speed of 100 r/min ± 3 r/min is specified for all test methods. If the rotation speed is slower than the specified value, then the molten solder flow speed is lower than the speed in the actual production process. Thus, this condition is not recognized as an acceleration factor of the molten solder flow speed in the actual production process. If the rotation speed is higher than the specified value, then the molten solder begins to rotate and the relative speed difference between the molten solder and the specimen becomes minimal. This condition is also not recognized as an acceleration factor of the molten solder flow speed in the actual production process.

NOTE An example of a test result is shown in Figure A.3.

6.3.3 Bending stress to the specimen

If it takes too long during the rotation test at 450 °C, further acceleration is needed. During the rotation test at 450 °C with 2 mm bending specified in IEC 62739-2, the specimen is subjected to bending stress as additional acceleration. 1 mm bending stress is not enough to accelerate occurrence of erosion (see Clause A.2). Bending stress exceeding 2 mm gives permanent deformation of the specimen, thus the erosion depth measurement by the focal depth method becomes difficult.

6.4 Dross

6.4.1 Dross generation and removal interval

The higher the test temperature and the higher the rotation speed, the more dross is generated due to the promoted oxidation of molten solder. Compared to the amount of dross produced by the rotation test at 350 °C the rotation test at 450 °C, generates more dross. However, by removing dross every 16 h, both tests can be run without problems such as firing and overflowing.

To reduce dross, nitrogen gas atmosphere is advantageous. However, the equipment configuration such as oxygen partial pressure adjustment can be complicated. The test can be conducted with periodic dross removal as mentioned above, thus this is not recommended.

6.4.2 Dross removal method

Dross removal shall be carried out after the motor has been switched off, by using an appropriate tool (for example, a stainless steel ladle with many holes, as shown in Figure 2). The safety of the operator shall be ensured, by protective measures such as heat-resistant gloves, a face mask and dust-proof glasses to protect him/her from high temperatures and metal dust in the air. The removed dross should be put into sealable containers to minimize the splashing of metal dust from the removed dross.

IEC

Figure 2 – Example of dross removal tool

6.4.3 Molten solder volume after dross removal

After dross removal, to ensure that the specified dipping depth is met, check the volume of the molten solder in the solder pot. If the volume of the molten solder is short, solder alloy shall be added accordingly.

6.5 Erosion depth measurement method

6.5.1 Post test treatment

If solder adheres, before the measurement, heat the specimen and wipe it off, or clean it using acid, for example, using diluted hydrochloric acid (5 %) for 10 min at 20 °C.

Licensed copy: IP Login, University of Oxford, Version correct as of 04/08/2018

6.5.2 Local erosion depth

6.5.2.1 Erosion depth definition

A general definition of erosion depth for a crater like shape is defined as $D = (D_0 - U_T) + D'$ as shown in Figure 3.

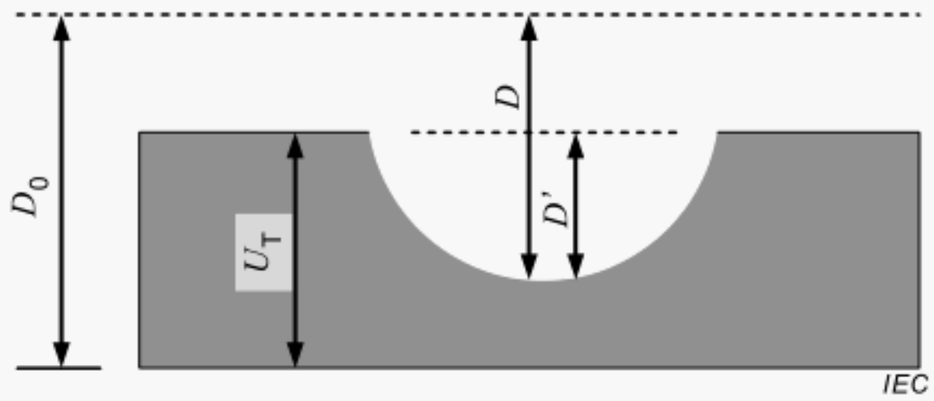

Key

D True erosion depth

D_0 Specimen thickness before test

U_T Specimen thickness after test

D' Calculated erosion depth

Figure 3 – Schematic general definition of erosion depth

6.5.2.2 Erosion depth measurement using the focal depth method

In the test methods specified in IEC 62739-1 and IEC 62739-2, the specimen is relatively small, and it is difficult to measure it, by using the depth gauge and thus the optical method is used. There are also various optical methods (see Annex B), among these, the focal depth method using an optical microscope. These microscopes are relatively inexpensive.

The erosion depth measurement using the focal depth method is based on the assumption that the specimen thickness after the test remains unchanged, and that a non-erosion area can be observed on the same observation screen. As shown in Figure 4, D_0 is equal to U_T and D is equal to D'.

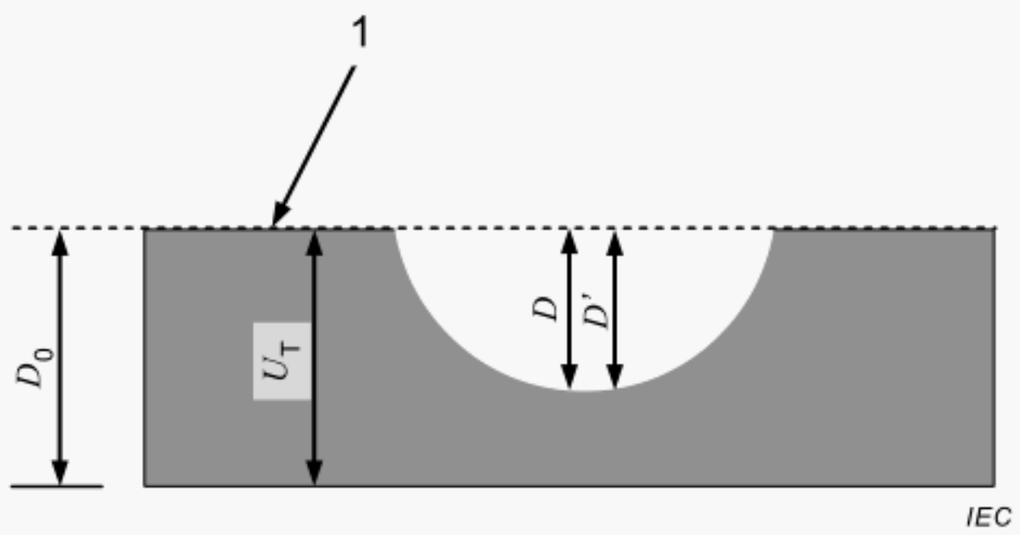

Key

1 Base plane for erosion depth easement (0 position)

D True erosion depth

D_0 Specimen thickness before test

U_T Specimen thickness after test

D' Calculated erosion depth

Figure 4 – Schematic definition of erosion depth by focal depth method

Licensed copy: IP Login, University of Oxford, Version correct as of 04/08/2018

6.5.2.3 Presentation of erosion depth by the focal depth method

If precise measurement is required, measure the specimen thickness before and after the test and calculate the erosion depth according to the definition of Figure 3. In case the specimen thickness remains same before and after the test, the measured value of D' may be used as erosion depth according to the definition of Figure 4. Figure 5 shows typical examples of local erosion.

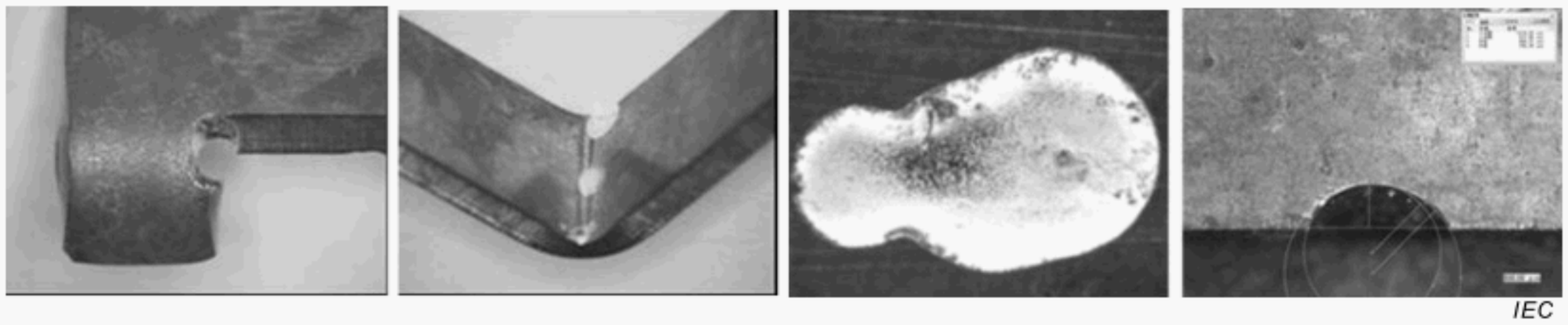

Figure 5 – Examples of local erosion

6.5.2.4 Evaluation region

The erosion state depends on the immersion position of the specimen into the solder pot. Thus 5 points for each 3 regions, as shown in Figure 6, shall be measured and statistically analysed. For comparative evaluation, the maximum (the deepest) value may be used as the representative value.

Dimensions in millimetres

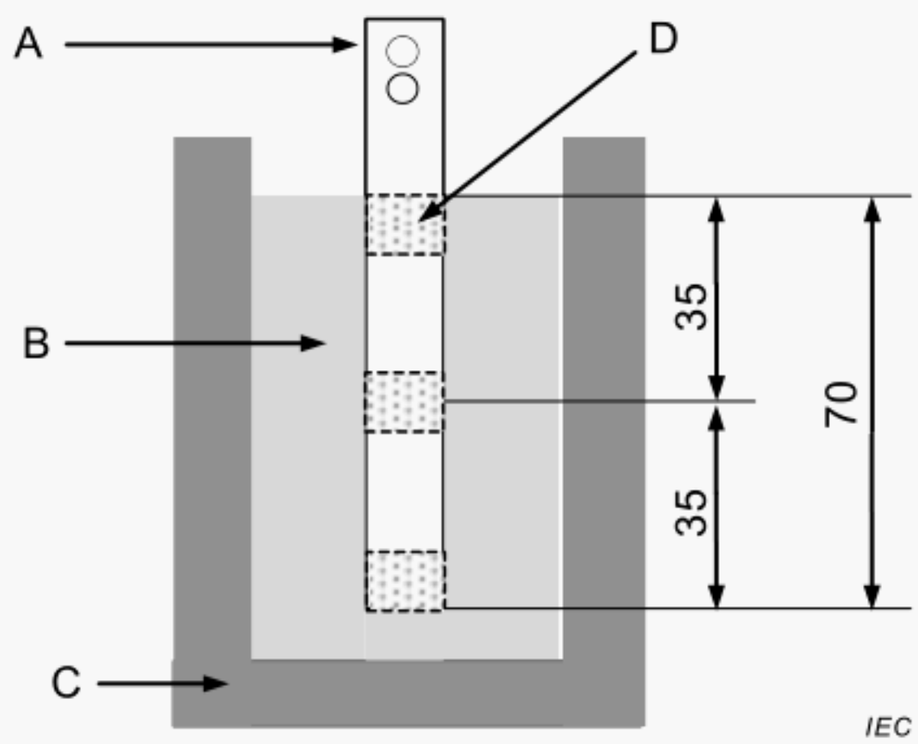

Key

A Specimen

B Molten solder

C Solder pot

D Evaluation region (If erosion occurs other than in the designated region, such region may be added for evaluation.)

Figure 6 – Example of evaluation region

6.5.3 General (uniform) erosion depth

6.5.3.1 Presence of non-erosion area

In the case where any non-erosion area exists on the same observation screen as shown in Figure 7, the erosion depth can be measured by the focal depth method in 6.5.2.

Licensed copy: IP Login, University of Oxford, Version correct as of 04/08/2018

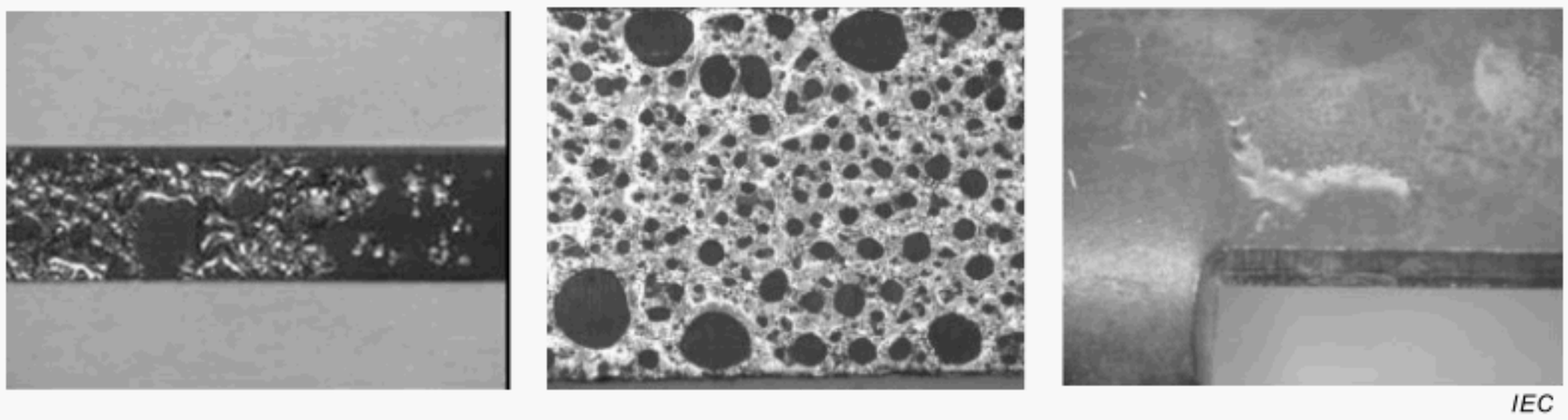

IEC

Figure 7 – Examples with non-erosion area

6.5.3.2 Absence of non-erosion area

In the case where general erosion occurs and no non-erosion area exists nearby, as shown in Figure 8, the erosion depth is defined as the specimen thickness difference between before and after the test. The specimen thickness can be measured using the plane observation method, as follows:

- observe the specimen from the side view, or;
- observe the cross section of the specimen (cut and polish) after the test only.

NOTE An example of plane observation equipment is shown in Table B.2.

IEC

Key

1 Encroached area

Figure 8 – Examples without a non-erosion area and an example of a cross section

6.5.4 Evaluation

The deeper the erosion depth, the better the judgement. This test method is not intended to evaluate if acceptable or inacceptable, but to estimate the appropriate maintenance of the life cycle of components by relative comparison, in order to prevent accidents caused, for example, by molten solder leaking or fire. See examples of problems in Table 1.

NOTE If necessary, the maximum erosion depth can be estimated using the method as explained in IEC 62739-1:2013, Annex B.

7 Overview of the test methods

7.1 Test methods

Overviews of the test methods are given in 7.2 and 7.3, respectively.

7.2 Metal material without surface processing

7.2.1 General

The erosion test for metal material without surface processing is to determine the level of erosion by measuring the erosion depth which is generated and increased by the rotation test

Licensed copy: IP Login, University of Oxford, Version correct as of 04/08/2018

at 350 °C. The surface layer of the specimen such as oxide layer formed on the stainless steel may be chemically removed by the flux used in the actual production process and thus affects the erosion rate. The flux specified in Table 4 shall be use to the test for the specimen without surface processing (see Clause C.1).

7.2.2 Rotation test at 350 °C

The rotation test at 350 °C is applicable to the metal material without surface processing for the erosion evaluation. As shown in Figure 9, the specimen is fixed onto the rotation block and then immersed into molten solder at 350 °C ± 3 °C. Following, it is rotated at 100 r/min ± 3 r/min whereupon the erosion depth which occurs during the test is measured. Table 4 shows an overview of the test conditions.

To facilitate erosion (see Clause C.1), the specimen is immersed into the flux for a few seconds, then the excess flux is being removed, and finally the specimen is suspended in air for 5 min to 10 min to dry.

Details of the test method are specified in IEC 62739-1.

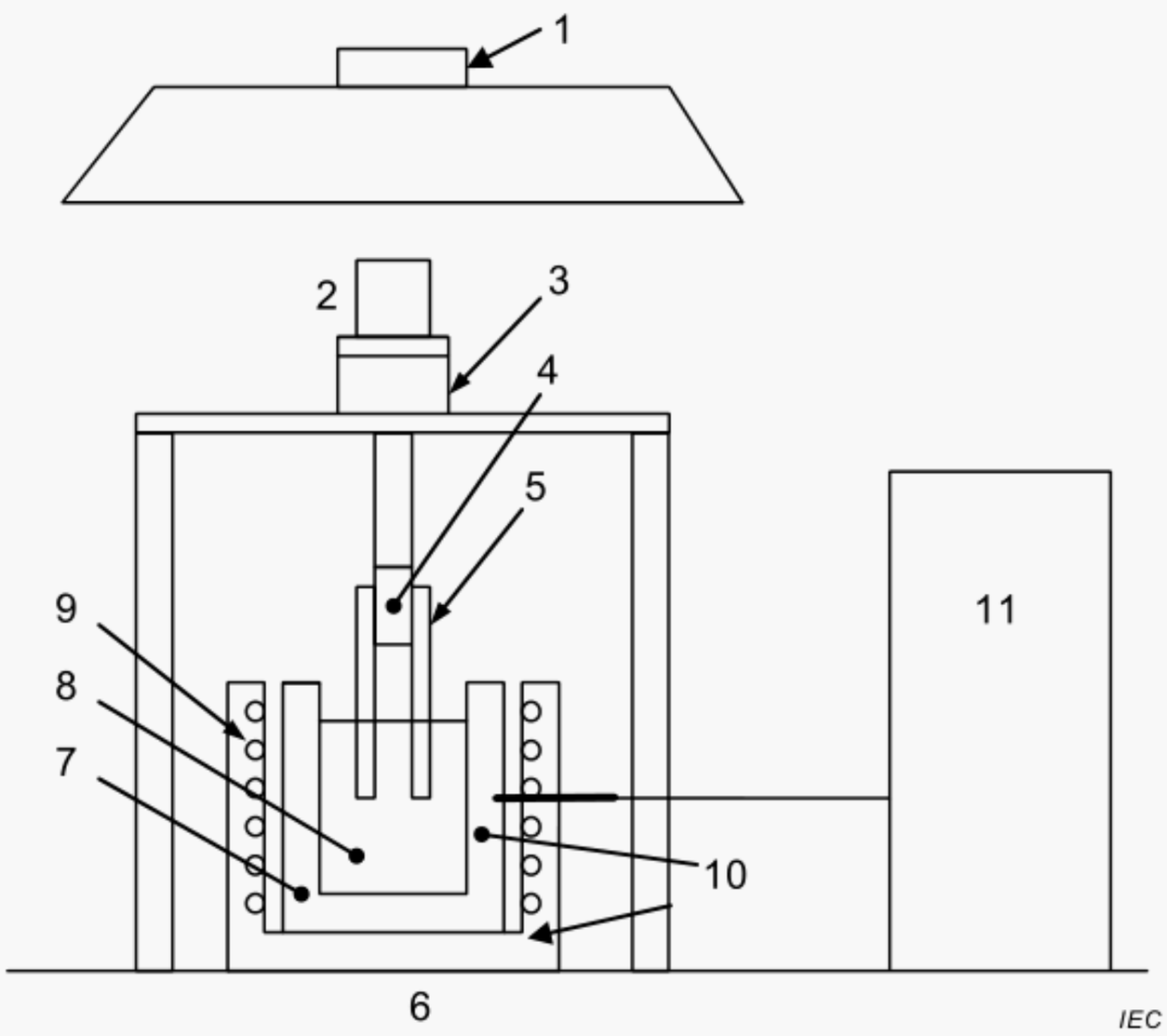

Key

1	Exhaust air duct	7	Solder pot
2	Rotation unit	8	Molten solder
3	Rotation motor	9	Heater
4	Rotation block	10	Temperature sensor
5	Specimen	11	Control unit
6	Solder pot unit		

Figure 9 – Configuration example of test equipment

Licensed copy: IP Login, University of Oxford, Version correct as of 04/08/2018

Table 4 – Test conditions for rotation test at 350 °C

Test conditions	Specification
Composition of test solder alloy	Sn96,5Ag3Cu,5 specified in this document shall be used if not otherwise specified in individual standards.
Test flux	Rosin flux with halide content of 0,2 % mass fraction shall be used. Materials specified in IEC 60068-2-20:2008, Annex B shall be used.
Molten solder temperature (at measurement position)	350 °C ± 3 °C (The temperature is measured at a depth of 35 mm to 40 mm from the molten solder surface and at a distance of 20 mm to 30 mm from the specimen.)
Rotation speed of specimen	100 r/min ± 3 r/min
Rotation radius of specimen	6 mm to 8 mm (from the centre of the rotation block to the outer edge of the specimen)
Dipping depth of specimen	65 mm to 70 mm (from molten solder surface to the lower edge of the specimen.)
Test duration	The suitable test duration shall be set up in advance.
Frequency of removal of dross	At least once every 16 h

7.3 Metal material with surface processing

7.3.1 Test method

The erosion test for metal material with surface processing is to determine the level of erosion by measuring the erosion depth which is generated and increased by the rotation test at 450 °C or, if further acceleration is necessary, by the rotation test at 450 °C with 2 mm bending.

7.3.2 Rotation test at 450 °C

The rotation test at 450 °C is applicable to the metal material without surface processing for the erosion evaluation. As shown in Figure 9, the specimen is fixed onto the rotation block then immersed into 450 °C ± 3 °C molten solder and rotated at 100 r/min ± 3 r/min whereupon the erosion depth which occurs during the test is measured. Table 5 shows an overview of the test conditions.

Details of the test method are according to IEC 62739-2.

Table 5 – Test conditions for rotation test at 350 °C

Test conditions	Specification
Composition of the test solder alloy	Sn96,5Ag3Cu,5 specified in this document shall be used if not otherwise specified in individual standards.
Molten solder temperature (at measurement position)	450 °C ± 3 °C (The temperature is measured at a depth of 35 mm to 40 mm from the molten solder surface and at a distance of 20 mm to 30 mm from the specimen.)
Rotation speed of specimen	100 r/min ± 3 r/min
Rotation radius of specimen	6 mm to 8 mm (from the centre of the rotation block to the outer edge of the specimen)
Dipping depth of specimen	65 mm to 70 mm (from the molten solder surface to the lower edge of the specimen.)
Test duration	The suitable test duration shall be set up in advance.
Frequency of removal of dross	At least once every 16 h

Licensed copy: IP Login, University of Oxford, Version correct as of 04/08/2018

7.3.3 Rotation test at 450 °C with 2 mm bending

If the rotation test at 450 °C takes too long for erosion occurrence enabling evaluation, and additional acceleration is required, add 2 mm bending stress to the specimen, as shown in Figure 10.

Details of the test method are specified in IEC 62739-2.

Dimensions in millimetres

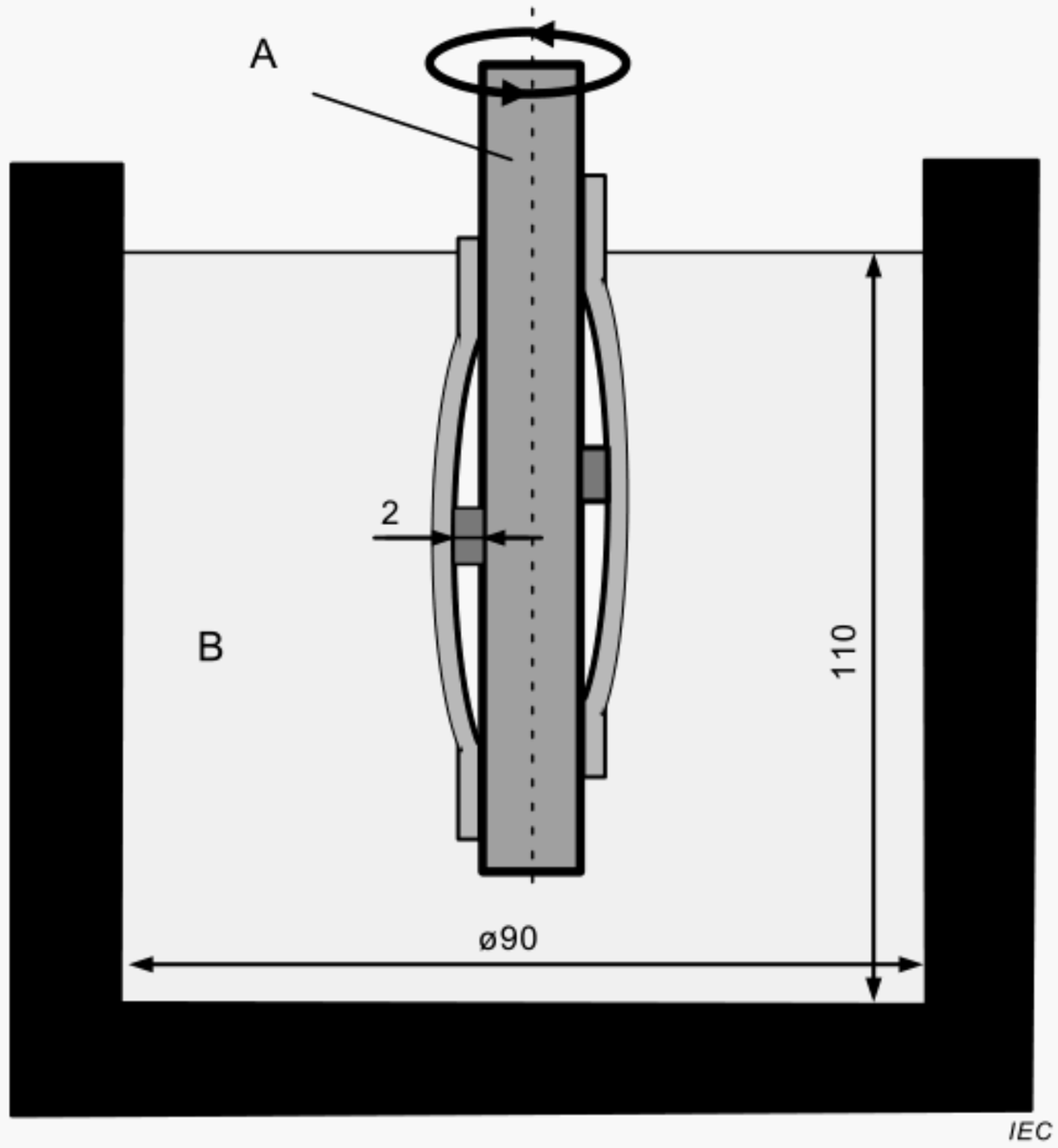

Key

A Rotation shaft

B Molten solder

Figure 10 – Configuration example of test equipment for rotation test at 450 °C with 2 mm bending

Licensed copy: IP Login, University of Oxford, Version correct as of 04/08/2018

Annex A
(informative)

Selection of test temperature, test duration and bending stress

A.1 Specimen without surface processing

In the erosion test for the material without surface processing, the molten solder temperature, the rotation speed, etc. are fixed as test conditions. These conditions are determined by a preliminary erosion test using the specimen shown in Figure A.1, observing erosion occurrence and dross generation during the test.

Dimensions in millimetres

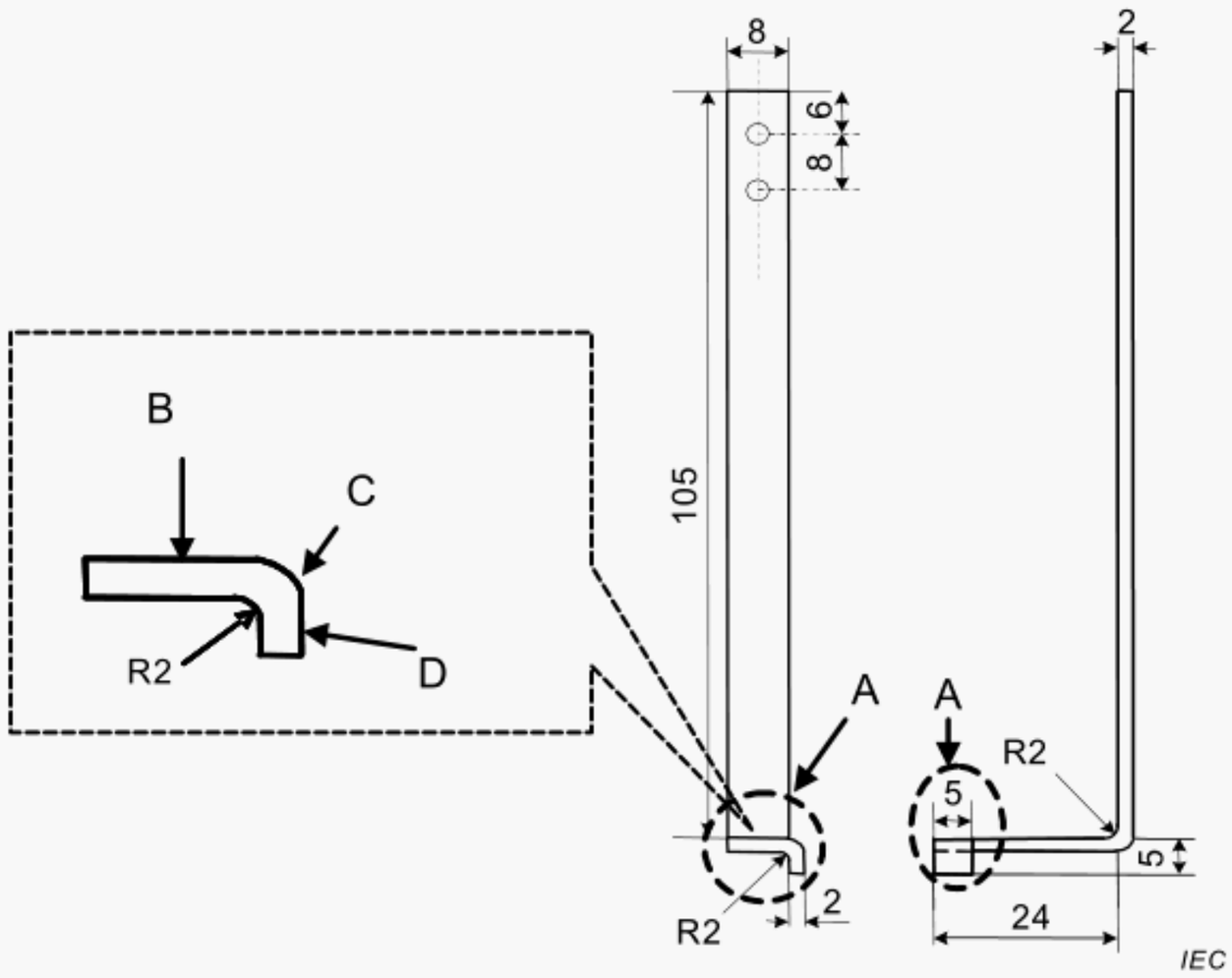

Key

A Location 1

B Horizontal

C Curve

D Vertical

Figure A.1 – Specimen configuration for preliminary test

The effect on the erosion depth against molten solder, temperature and the rotation speed is shown in Figure A.2 and Figure A.3, respectively. These data are the result of the erosion test on the specimens as shown in Figure A.1, and the areas “Horizontal”, “Vertical” and “Curve” are as in Figure A.1. The higher the molten solder temperature and the rotation speed in the deeper the erosion depth. In other words, both molten solder temperature and rotation speed are heavily affected by the erosion behaviour of the metal material without surface processing. On the other hand, the higher the molten solder and rotation speed the more dross, which mainly consists of tin oxide, is generated. This process requires additional operations such as dross removal and a supply of solder alloy. Thus, to determine the erosion test conditions, the acceleration of erosion and the safety and efficiency shall be taken into consideration. After reviewing the preliminary test result, the test temperature of 350 °C ± 3 °C and the rotation speed of 100 r/min ± 3 r/min shall be specified.

Licensed copy: IP Login, University of Oxford, Version correct as of 04/08/2018

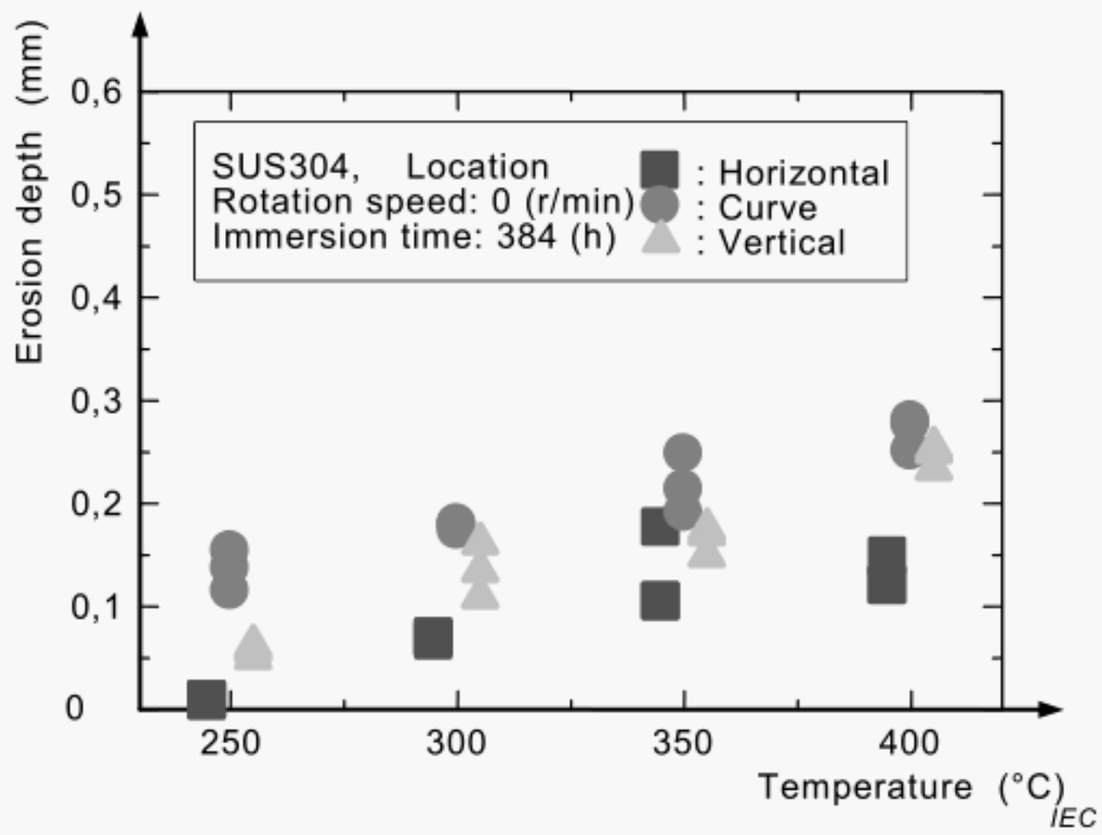

Figure A.2 – Erosion depth against molten solder temperature

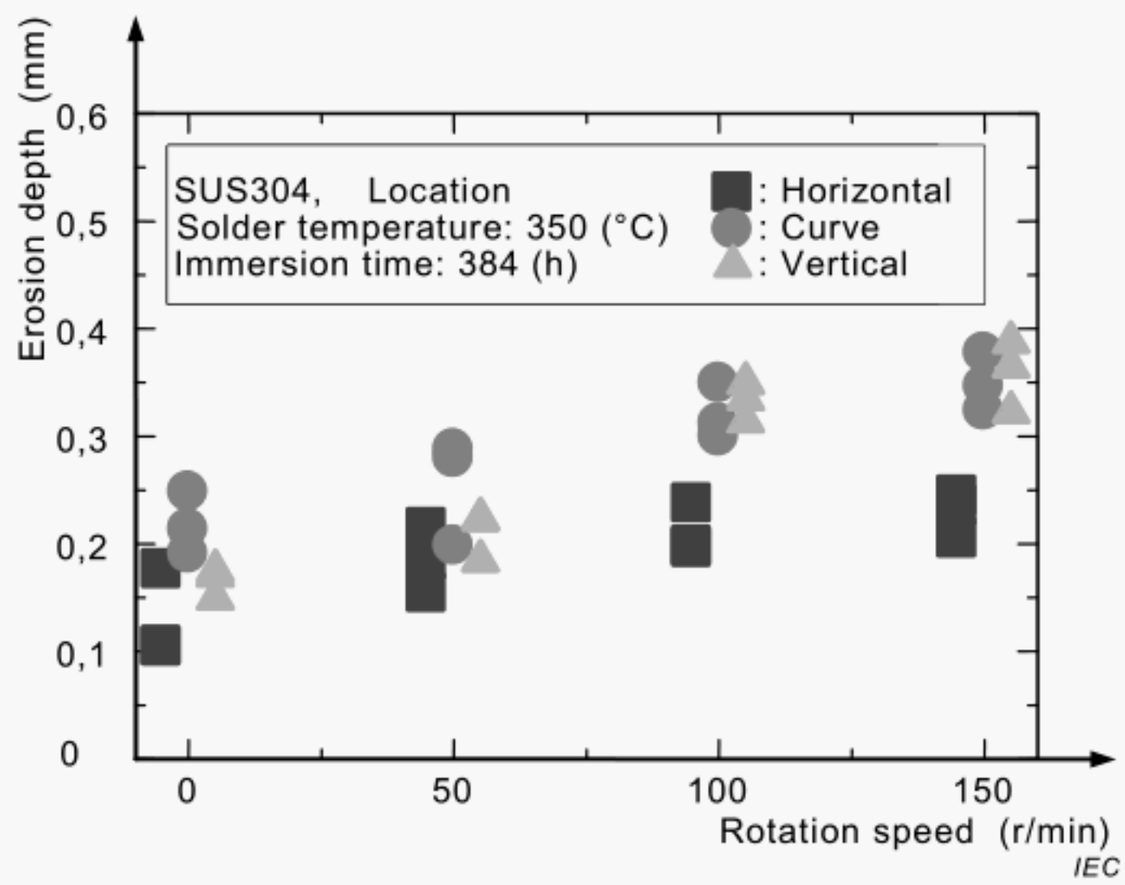

Figure A.3 – Erosion depth against rotation speed

The effect on the erosion depth with respect to the immersion time is shown Figure A.4. The longer the immersion the deeper the erosion depth. Generally, deeper erosion depth shows the difference in erosion clearly. On the other hand, the focal depth method using a common optical microscope is proposed as the erosion depth measurement method. This measurement method requires any remaining non-eroded specimen surface which is used as baseline, after the test. The erosion phenomenon varies depending on the material used, thus the adequate test duration should be specified in advance. For example, when a test is conducted under specified conditions, the test duration is approximately 200 h for stainless steel (SUS316, SUS304, etc.).

Licensed copy: IP Login, University of Oxford, Version correct as of 04/08/2018

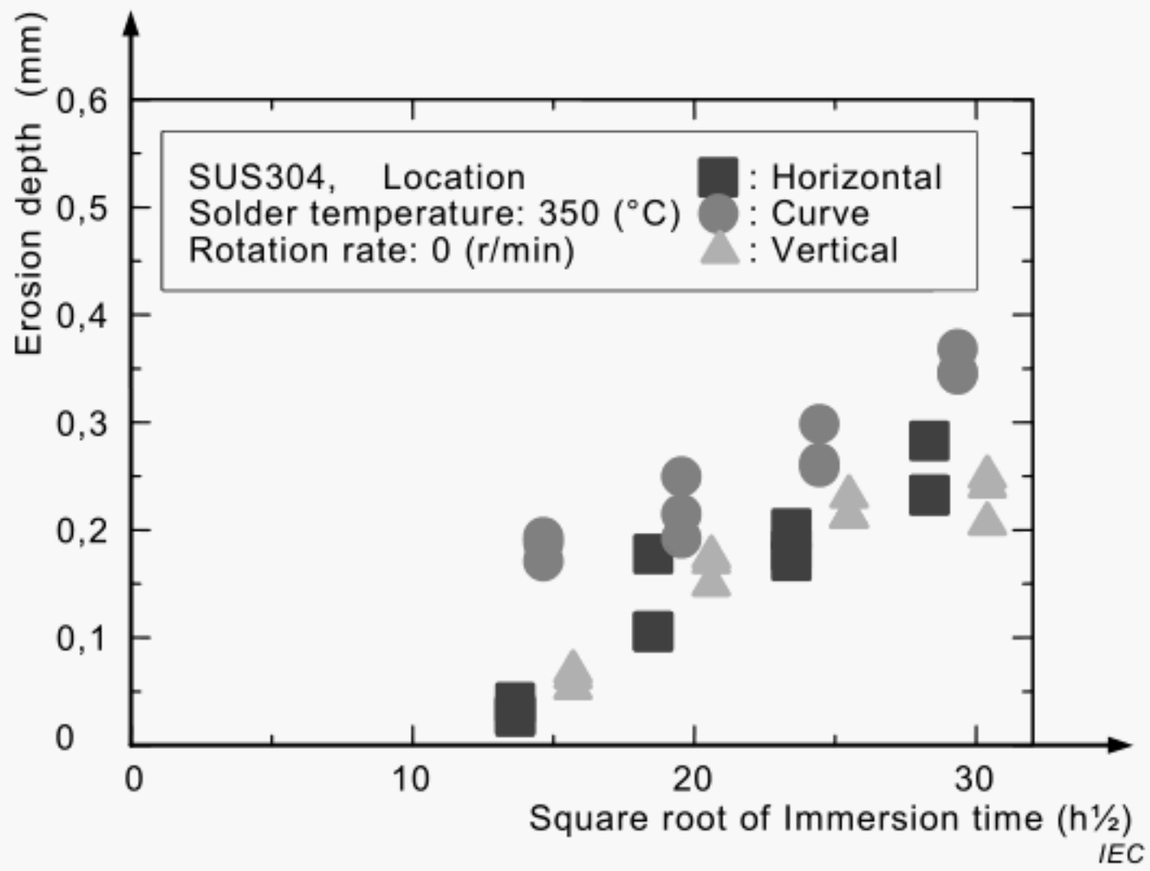

Figure A.4 – Erosion depth against immersion time

A.2 Specimen with surface processing

The temperature of molten solder of 350 °C ± 3 °C is the test condition of the erosion test for material without surface processing, as specified in IEC 62739-1. It is difficult to conduct an erosion test for material with surface processing at this temperature. When the erosion test for available material with surface processing is conducted at 350 °C, erosion may not occur even after 1 000 h. Therefore, to evaluate the process efficiently, the promotion of erosion occurrence such as thermal stress or mechanical stress is required.

Table A.1 shows erosion test results for the materials of gas nitriding and nitrocarburizing. According to the test result on gas nitriding material, higher test temperatures result in shorter erosion occurrence time, regardless of the base material. Regarding the bending stress, the erosion occurrence time becomes shorter when bending stress is applied at the same test temperature. As for SUS304 base material, the influence of the amount of bending with respect to the erosion is not quite understood. On the other hand, as for SUS316 base material, the erosion occurrence time becomes shorter with increased bending. As for nitrocarburizing material, the influence of temperature stress is greater than the impact of the bending stress. As mentioned above, to conduct an erosion test for surface processing materials in hundreds of hours, temperature stress and bending stress is useful. Care should be taken to avoid over stress, so that the microstructure of the material under test is not so different from the actual wave soldering equipment.

Licensed copy: IP Login, University of Oxford, Version correct as of 04/08/2018

Table A.1 – Erosion test results for the materials of gas nitriding and nitrocarburizing

Surface processing	Base material	Test temperature °C	Additional stress	Erosion occurrence time h
Gas nitriding	SUS304	400	None	600
		450	None	200
		400	1 mm bending	24
		400	2 mm bending	100
		450	1 mm bending	24
	SUS316	400	None	over 2 000
		450	None	200
		400	1 mm bending	500
		400	2 mm bending	100
		450	1 mm bending	50
Nitrocarburizing	SUS304	400	1 mm bending	580
		400	2 mm bending	600
		450	None	300
		450	1 mm bending	80
	SUS316	400	1 mm bending	over 1 300
		400	2 mm bending	over 900
		450	None	500
		450	1 mm bending	100

Table A.2 shows erosion test results for the materials of the coating type surface processing. In case of coating type surface processing, there is clear difference of erosion occurrence depending on the kind of coating. When a test is carried out at 450 °C, erosion already occurs at the first observation period of 150 h for fine ceramic coating by chemical densified process, but erosion is not observed during the test period for CrN coating by the PVD method and alumina coating by thermal spray. Even if the test is conducted with additional bending stress or conducted at 500 °C, erosion is not observed during the test period. Also, there is no difference of base material of SUS304 and SUS316. In this erosion test range, there is marked difference between occurrence and non-occurrence of erosion. This is understood when existing cracks on the coating surface greatly react to erosion caused by molten solder.

Licensed copy: IP Login, University of Oxford, Version correct as of 04/08/2018

Table A.2 – Erosion test results for the materials of coating type surface processing

Surface processing	Base material	Test temperature °C	Additional stress	Erosion occurrence time h
Fine ceramic coating by chemical densified process	SUS304	450	none	150 or less
		500	none	150 or less
	SUS316	500	none	150 or less
CrN coating by PVD method	SUS304	450	2 mm bending	Over 300
		500	none	Over 500
	SUS316	500	none	Over 500
Alumina coating by thermal spray	SUS304	450	none	Over 300
		450	2 mm bending	Over 300
		500	none	Over 500
	SUS316	500	none	Over 500

Licensed copy: IP Login, University of Oxford, Version correct as of 04/08/2018

Annex B
(informative)

Maximum depth and other measurements

B.1 General

In general, quantitative evaluation methods of metal corrosion are mass loss (mass variation) measurements and erosion depth measurements.

B.2 Maximum depth measurement

The measurement methods for the maximum depth are shown in Table B.1. Table B.1 also shows the measurement plane, features and the measurement accuracy of each methods. Table B.2 shows examples of various types of observation equipment and observation status, measurement conditions and measurement data.

Licensed copy: IP Login, University of Oxford, Version correct as of 04/08/2018

Table B.1 – Measurement methods, features and accuracy

Observation method	Coordinate axis (Observation direction)	Features	Accuracy
Focal depth using digital microscope	Z (depth)	Take time due to turning knob and reading indicator while observing the screen. Appropriate magnification ratio: 200 or more Little limitation on object	68 µm or less (magnification ratio of 300) 47 µm or less (magnification ratio of 600)
Plane observation using digital microscope	X-Y	Easy to operate Able to take picture for each plane data Able to store measured value Able to measure erosion depth at the corner by taking picture from both side Unable to measure erosion depth for crater-like erosion	10 µm
Laser displacement	Z	Easy to operate Able to store measured value	10 µm
Three-dimensional observation using 3-D laser microscope	X-Y-Z	Easy to operate, high accuracy Able to take picture for each three dimensional data Able to store measured value Limitation on object size and shape	0,001 µm
Double scanning laser displacement	Z	Easy to operate Read data from monitor Limitation on object size and shape	0,1 µm to 0,01 µm

Licensed copy: IP Login, University of Oxford, Version correct as of 04/08/2018

Table B.2 – Example of measurement equipment

Observation method	Observation status	Measurement status/ measurement data
Focal depth using digital microscope	Coarse adjusting knob IEC	Digital indicator IEC
Plane observation using digital microscope	Observation stage 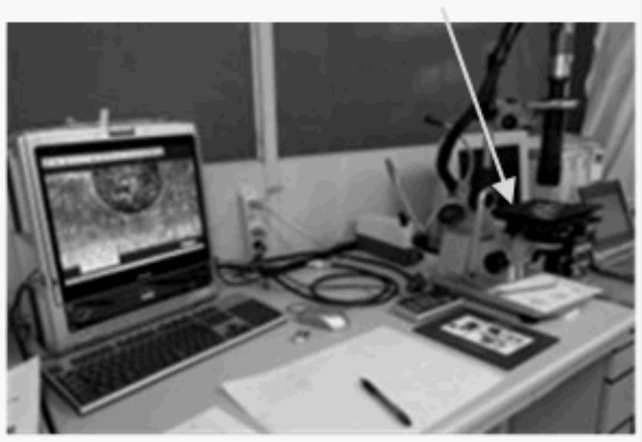 IEC	Measurement data 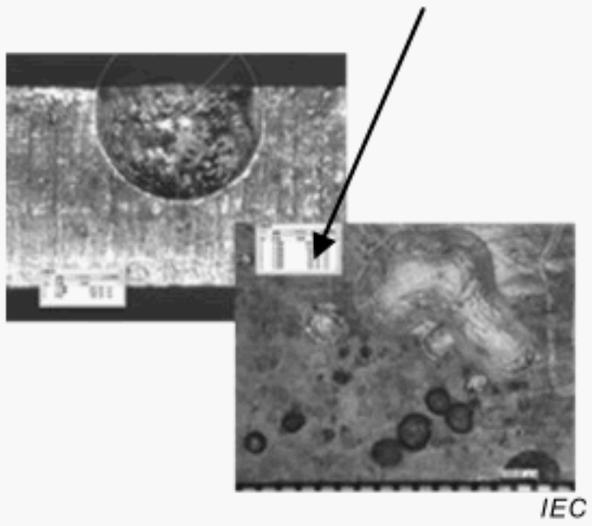 IEC
Three-dimensional observation using 3-D laser microscope	Observation by laser microscope and 2D analysis 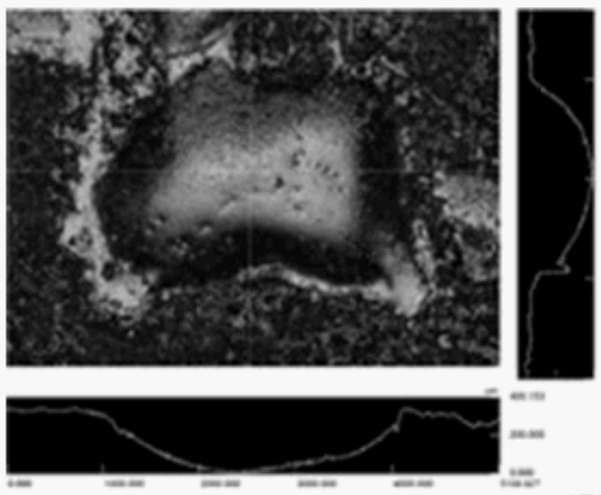 IEC	Observation by laser microscope and 3D analysis 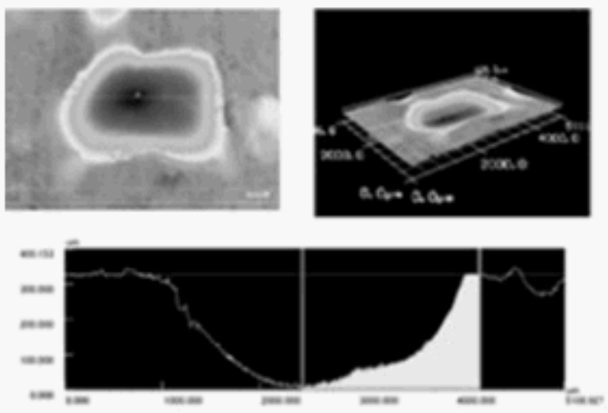 IEC

Licensed copy: IP Login, University of Oxford, Version correct as of 04/08/2018

Annex C
(informative)

Erosion mechanism

C.1 Specimen without surface processing

In general, when solid metal is immersed into molten metal or molten metal is in contact with solid metal, after wetting, solid metal dissolves into molten metal, and erosion occurs even though the temperature below melting point of solid metal. For example, at the soldering temperature of around 250 °C the dissolution of metal such as copper (Cu), nickel (Ni) and gold (Au), into molten solder occurs rapidly. The erosion of metal material without surface processing used in the wave soldering equipment signifies the metal dissolving phenomenon as explained above.

Even stainless steel with a dense surface oxide layer and good surface corrosion resistance, may suffer from the destruction of its surface oxide layer. If this happens then molten solder wetting initiates erosion. In fact, the destruction of the surface oxide layer occurs in a limited area, so that erosion of stainless steel tends to be uneven and local. The destruction of the surface oxide layer is due to thermal, mechanical and chemical factors. Thermal and mechanical factors include molten solder and material surface temperature; wear by molten solder flowing speed and friction with dross, as well as bend and tensile stress. Chemical factors include mainly flux used in the soldering process.

C.2 Specimen with surface processing

For the material with surface processing by atomic diffusion such as nitriding, erosion occurs by the following steps (refer to Figure C.1):

a) the surface layer of the nitrided layer peels off, then the molten solder wets the nitrided layer;

b) tin (Sn) diffuses into the nitrided layer which forms a tin-diffused layer; simultaneously the metal compound in the base material diffuses into the molten solder and is melted; iron-tin (Fe-Sn) system compound is formed in the boundary layer between the molten solder and the tin-diffused layer (ex-nitrided layer);

c) the tin-diffused layer spreads all over the nitrided layer;

d) the tin-rich (chromium:Cr-poor) region is formed in the boundary layer between the tin-diffused layer and the base material;

e) the tin-rich region grows into the base material, and thus erosion begins below the tin-diffused layer (ex-nitrided layer);

f) the tin diffusion layer (ex-nitrided layer) located in between the tin-rich region and the molten solder is destroyed, and in this way erosion progresses.

After step f), erosion can be observed by visual inspection. Until step e), it is hard to confirm erosion occurrence, since only discolouration is recognisable in appearance. However erosion of the base material already begins at step d).

While erosion of coating type surface processing such that ceramic layer which is highly heat resistant is formed onto the base material, it is different from the above mentioned diffusion type. It is believed that a crack occurs on the coating layer from defective parts, etc., so that molten solder penetrates into the crack then erosion occurs.

Licensed copy: IP Login, University of Oxford, Version correct as of 04/08/2018

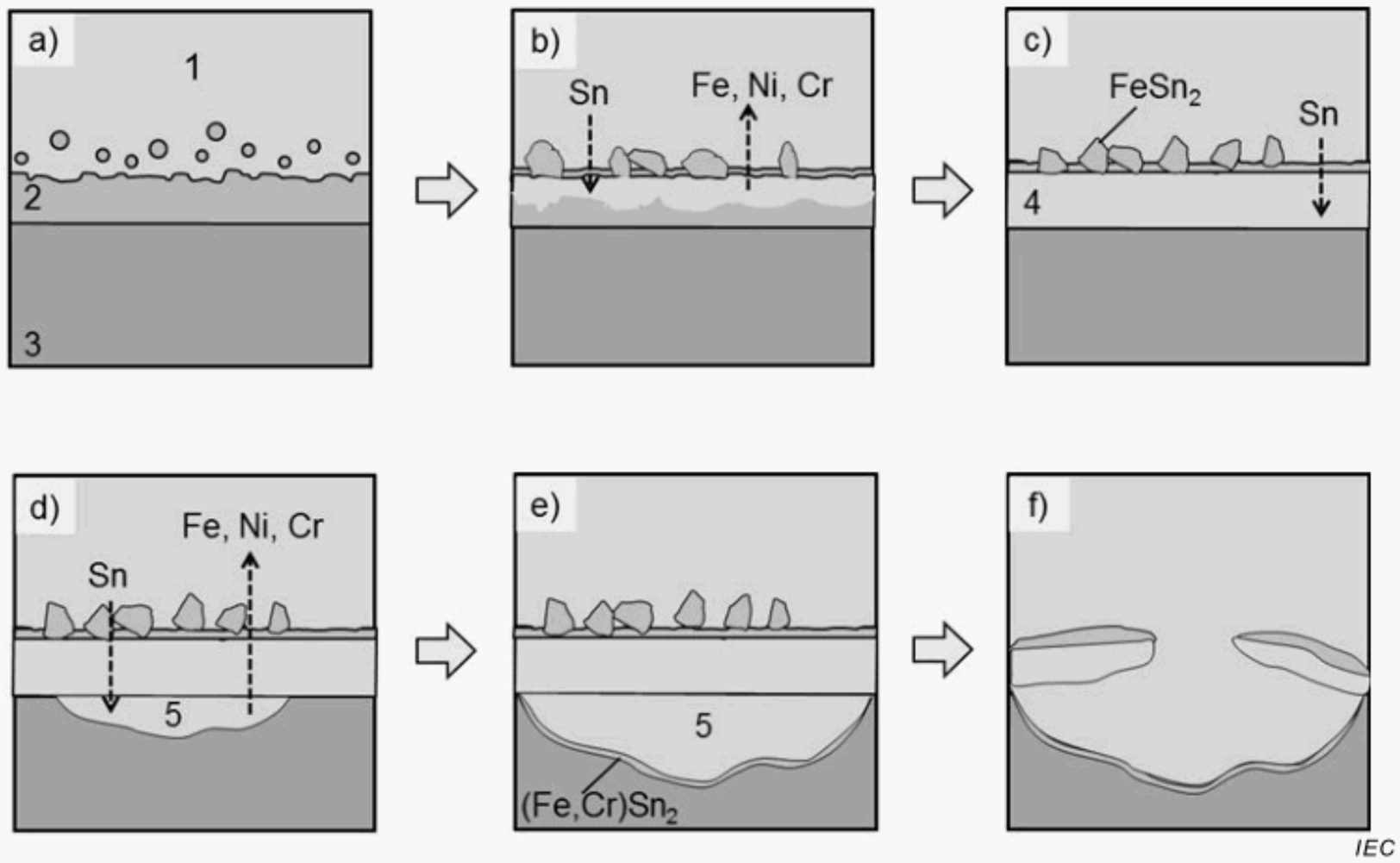

Key

1 Molten solder

2 Nitrided layer

3 Base material (stainless steel)

4 Tin-diffused layer

5 Tin-rich layer

Figure C.1 – Erosion mechanism for material with nitriding

C.3 Further guidance

For further information on erosion behavior of plasma nitriding stainless steel by molten Sn-Ag-Cu lead-free solder, see Naoya Matsubara et al in the Bibliography.

Licensed copy: IP Login, University of Oxford, Version correct as of 04/08/2018

Annex D
(informative)

Thermal acceleration for erosion

D.1 Specimen without surface processing

Erosion for metal materials without surface processing used in wave soldering equipment also signifies the melting phenomenon of solid metal dissolving into molten metal (solder alloy) as explained in Clause C.1. In general, the dissolution rate of solid metal into molten metal is expressed by Formula (D.1) as a fundamental formula.

$$\frac{\mathrm{d}C}{\mathrm{d}t} = k\frac{A}{V}(C_{\mathrm{S}} - C) \tag{D.1}$$

where

C is solute content in the molten metal after reaction time of t_{S};

k is rate constant for dissolution;

A is the reaction area of the boundary between solid and molten metal;

V is volume of molten solder;

C_{S} is the solubility of solute for molten metal.

Assuming that the volume of molten solder (V) and the reaction area of the boundary between solid and molten metal (A) are constant, the dissolution rate is determined by $C_{\mathrm{S}} - C$. Also, the differential between the solubility and the actual solute content is the driving force. Thus, when the differential between the solubility and the actual solute content increases, then the dissolution rate increases and the solute dissolves into molten metal. When solute content increases, the differential decreases and the dissolution rate increases. While erosion depends on temperature, increasing the molten solder temperature increases the solubility and becomes the driving force for a higher dissolution rate. As the temperature of the molten solder decreases the solubility which is the driving force for dissolution also decreases. Therefore erosion depends on temperature, and rises the higher temperature.

D.2 Specimen with surface processing

For metal material with surface processing using a diffusion such as nitrided, physical separation of nitrided surface layer and growth of tin (Sn) diffusion layer by tin (Sn) diffusion into nitrided layer are the cause of erosion occurrence. Figure D.1 shows the test result of an investigation for tin (Sn) diffusion layer growth law using a specimen made of various plasma nitrided base materials which sandwich pure tin (Sn) foil. For each specimen, the incubation period before the nitrided surface layer peeling off and following the growth of the tin (Sn) diffusion layer are observed.

The nitrided surface layer peeling off depends on the heat-resistance of the nitrided layer surface and the properties of the mother materials, etc. Table D.1 shows the incubation period for each specimen. For each type of steel, the nitriding layer surface peeling off time becomes shorter when the temperature rises. For plasma nitriding specimen, the incubation period is affected by the mother material. The order of longer incubation period is SUS316, SUS310S and SUS304.

Table D.2 shows the tin (Sn) diffusion layer growth law calculated from the linear area immediately after the incubation period in Figure D.1. The growth rate increases with rising temperatures and the incubation period is shorter, for each specimen. In tin (Sn) diffusion layer growth processes, tin (Sn) diffusion in the region of ex-nitrided layer may dominate the reaction, but in the sandwich specimen mentioned above, the effect of Fe-Sn system

Licensed copy: IP Login, University of Oxford, Version correct as of 04/08/2018

compounds formed at the reaction boundary cannot be ignored. In the actual equipment, molten solder stagnation on the nitrided layer surface israre, thus the tin (Sn) diffusion layer growth rate is considered slower than that shown in Table D.2. Also, Fe-Sn system compounds are easy to disperse into molten solder even if they are formed, thus the effect of Fe-Sn system compounds is considered insignificant. The results shown in Table D.2 are considered similar to the environment in which molten solder easily stagnates in the equipment, thus gap erosion can occur.

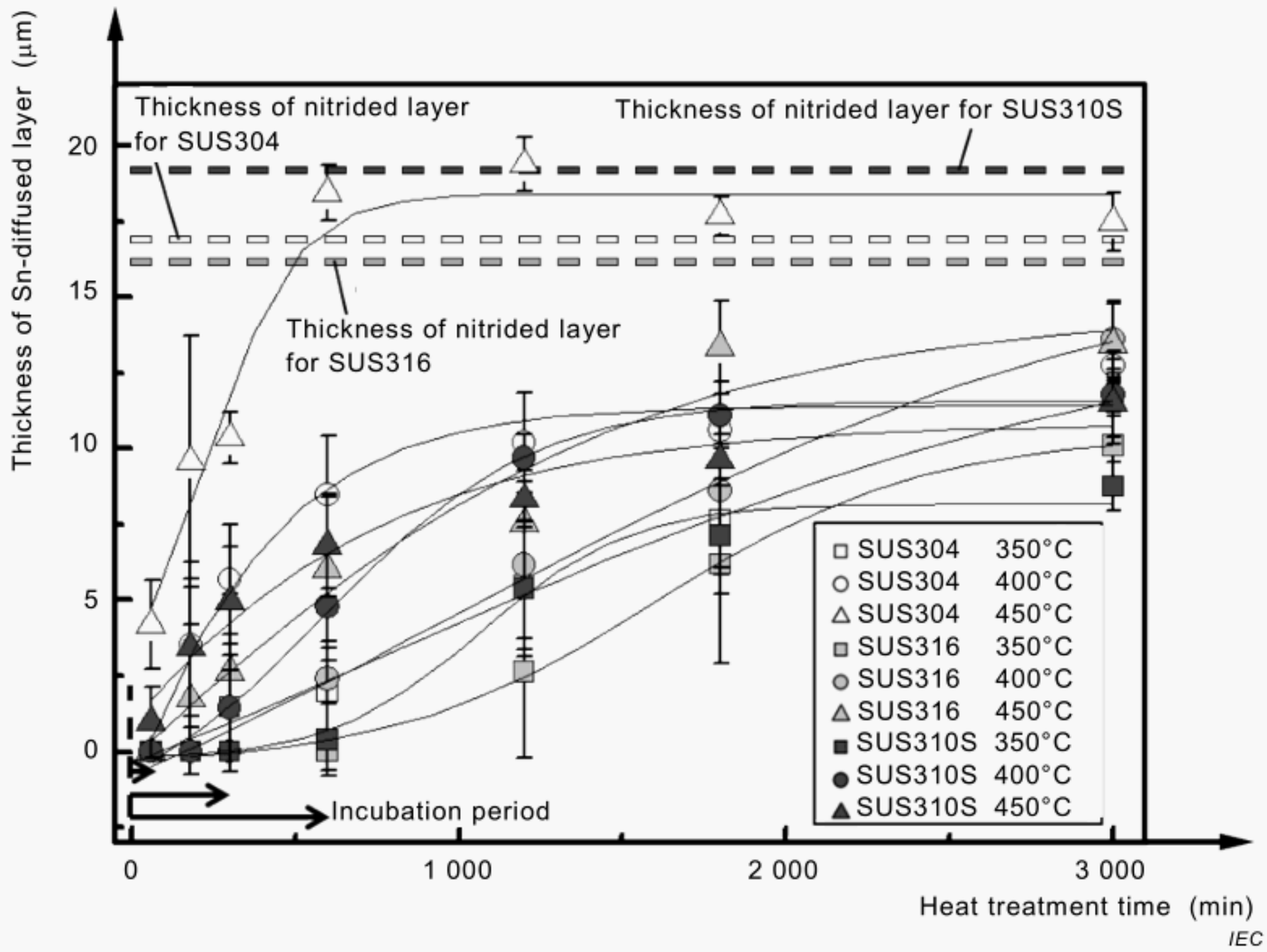

Figure D.1 – Tin (Sn) diffusion layer growth in the plasma nitriding layer for various stainless steel

Table D.1 – Plasma nitriding layer peeling off period (incubation period in Figure D.1)

Temperature °C	Incubation period min		
	SUS304	SUS316	SUS310S
350	246	634	569
400	73,1	325	304
450	33,4	94,0	42,9

Licensed copy: IP Login, University of Oxford, Version correct as of 04/08/2018

Table D.2 – Initial growth rate for tin (Sn) diffusion layer

Temperature °C	Initial growth rate nm/min		
	SUS304	SUS316	SUS310S
350	6,7	1,5	1,1
400	213	11,5	8,1
450	339	53,4	31,9

D.3 Further guidance document

For further information on interfacial reaction between molten Sn and plasma nitrided stainless steel, see Shingo Hattori, et al. in the Bibliography.

Licensed copy: IP Login, University of Oxford, Version correct as of 04/08/2018

Bibliography

IEC 60194:2015, *Printed board design, manufacture and assembly – Terms and definitions*

ISO 16143-1:2004, *Stainless steels for general purposes – Part 1: Flat products*

ISO 16143-2:2004, *Stainless steels for general purposes – Part 2: Semi-finished products, bars, rods and sections*

ISO 16143-3:2005, *Stainless steels for general purposes – Part 3: Wire*

Naoya Matsubara, Ikuo Shohji and Hideyuki Kuwahara, *Erosion Behavior of Plasma Nitriding Stainless Steel by Molten Sn-Ag-Cu Lead-Free Solder*
Proc. of InterPACK2011 (CD-ROM), IPACK2011-52026 (2011)

Shingo Hattori, Naoya Matsubara, Ikuo Shohji and Hideyuki Kuwahara, *Interfacial Reaction between Molten Sn and Plasma Nitrided Stainless Steel*
Proc. of InterPACK2013 (CD-ROM), IPACK2013-73170 (2013)

Licensed copy: IP Login, University of Oxford, Version correct as of 04/08/2018

Licensed copy: IP Login, University of Oxford, Version correct as of 04/08/2018

This page deliberately left blank

Licensed copy: IP Login, University of Oxford, Version correct as of 04/08/2018

This page deliberately left blank

NO COPYING WITHOUT BSI PERMISSION EXCEPT AS PERMITTED BY COPYRIGHT LAW

British Standards Institution (BSI)

BSI is the national body responsible for preparing British Standards and other standards-related publications, information and services.

BSI is incorporated by Royal Charter. British Standards and other standardization products are published by BSI Standards Limited.

Licensed copy: IP Login, University of Oxford, Version correct as of 04/08/2018

About us

We bring together business, industry, government, consumers, innovators and others to shape their combined experience and expertise into standards -based solutions.

The knowledge embodied in our standards has been carefully assembled in a dependable format and refined through our open consultation process. Organizations of all sizes and across all sectors choose standards to help them achieve their goals.

Information on standards

We can provide you with the knowledge that your organization needs to succeed. Find out more about British Standards by visiting our website at bsigroup.com/standards or contacting our Customer Services team or Knowledge Centre.

Buying standards

You can buy and download PDF versions of BSI publications, including British and adopted European and international standards, through our website at bsigroup.com/shop, where hard copies can also be purchased.

If you need international and foreign standards from other Standards Development Organizations, hard copies can be ordered from our Customer Services team.

Copyright in BSI publications

All the content in BSI publications, including British Standards, is the property of and copyrighted by BSI or some person or entity that owns copyright in the information used (such as the international standardization bodies) and has formally licensed such information to BSI for commercial publication and use.

Save for the provisions below, you may not transfer, share or disseminate any portion of the standard to any other person. You may not adapt, distribute, commercially exploit, or publicly display the standard or any portion thereof in any manner whatsoever without BSI's prior written consent.

Storing and using standards

Standards purchased in soft copy format:

- A British Standard purchased in soft copy format is licensed to a sole named user for personal or internal company use only.
- The standard may be stored on more than 1 device provided that it is accessible by the sole named user only and that only 1 copy is accessed at any one time.
- A single paper copy may be printed for personal or internal company use only.

Standards purchased in hard copy format:

- A British Standard purchased in hard copy format is for personal or internal company use only.
- It may not be further reproduced – in any format – to create an additional copy. This includes scanning of the document.

If you need more than 1 copy of the document, or if you wish to share the document on an internal network, you can save money by choosing a subscription product (see 'Subscriptions').

Reproducing extracts

For permission to reproduce content from BSI publications contact the BSI Copyright & Licensing team.

Subscriptions

Our range of subscription services are designed to make using standards easier for you. For further information on our subscription products go to bsigroup.com/subscriptions.

With **British Standards Online (BSOL)** you'll have instant access to over 55,000 British and adopted European and international standards from your desktop. It's available 24/7 and is refreshed daily so you'll always be up to date.

You can keep in touch with standards developments and receive substantial discounts on the purchase price of standards, both in single copy and subscription format, by becoming a **BSI Subscribing Member**.

PLUS is an updating service exclusive to BSI Subscribing Members. You will automatically receive the latest hard copy of your standards when they're revised or replaced.

To find out more about becoming a BSI Subscribing Member and the benefits of membership, please visit bsigroup.com/shop.

With a **Multi-User Network Licence (MUNL)** you are able to host standards publications on your intranet. Licences can cover as few or as many users as you wish. With updates supplied as soon as they're available, you can be sure your documentation is current. For further information, email subscriptions@bsigroup.com.

Revisions

Our British Standards and other publications are updated by amendment or revision.

We continually improve the quality of our products and services to benefit your business. If you find an inaccuracy or ambiguity within a British Standard or other BSI publication please inform the Knowledge Centre.

Useful Contacts

Customer Services
Tel: +44 345 086 9001
Email (orders): orders@bsigroup.com
Email (enquiries): cservices@bsigroup.com

Subscriptions
Tel: +44 345 086 9001
Email: subscriptions@bsigroup.com

Knowledge Centre
Tel: +44 20 8996 7004
Email: knowledgecentre@bsigroup.com

Copyright & Licensing
Tel: +44 20 8996 7070
Email: copyright@bsigroup.com

BSI Group Headquarters

389 Chiswick High Road London W4 4AL UK

bsi.