Licensed copy. University of Manchester Library. The University of Manchester Library, 2016

BS 750:2012

BSI Standards Publication

Specification for underground fire hydrants and surface box frames and covers

bsi.

...making excellence a habit.™

Licensed copy: University of Manchester Library, The University of Manchester Library Version correct as of 05/05/2016

Publishing and copyright information

The BSI copyright notice displayed in this document indicates when the document was last issued.

© The British Standards Institution 2012

Published by BSI Standards Limited 2012

ISBN 978 0 580 74714 4

ICS 13.220.10

The following BSI references relate to the work on this standard:
Committee reference FSH/17/8
Draft for comment 11/30243193 DC

Publication history

First published August 1937

First revision, January 1950

Second revision, August 1964

Third revision, February 1977

Fourth revision, January 1984

Fifth revision, September 2006

Sixth revision (present), September 2012

Amendments issued since publication

Date	Text affected

Licensed copy: University of Manchester Library, The University of Manchester Library Version correct as of 05/05/2016

Contents

Foreword *ii*

Introduction *1*

1 Scope *1*
2 Normative references *1*
3 Terms and definitions *2*
4 Fire hydrants *3*
5 Outlets *6*
6 Stem drive *7*
7 Draining system *7*
8 Coating *7*
9 Maintenance of water purity (potable water systems only) *9*
10 Type requirements *9*
11 Fire hydrant assembly – resistance to internal pressure of the shell and of all pressure containing components and resistance of the obturator to differential pressure *11*
12 Hydrostatic test certificate *11*
13 Marking and additional data *11*
14 Surface box frames and covers *11*
15 Marking *15*
16 Type requirements *15*
17 Production requirements *16*
18 Test certificate *16*

Annexes
Annex A (normative) Type tests for strength, security and endurance *17*
Annex B (normative) Type hydrostatic tests for screwed outlets *19*
Annex C (normative) Air release test *20*
Annex D (normative) Obturator impact resistance test *21*
Annex E (normative) Hydrant box cover opening procedure *21*
Annex F (normative) Information to be supplied by the purchaser *22*
Annex G (normative) Type and production loading tests for surface box frames and covers *22*

List of figures
Figure 1 – Example of type 1 fire hydrant showing required dimensions *4*
Figure 2 – Example of type 2 fire hydrant showing required dimensions *5*
Figure 3 – Screwed outlet (round thread) and outlet cap showing required dimensions *8*
Figure 4 – Minimum bedding width of surface box frame showing required dimensions *13*
Figure 5 – Prising bar dimensions *13*
Figure 6 – Geometry of prising slots *14*
Figure 7 – Detail of keyhole and key *15*
Figure A.1 – Load/deflection test apparatus *18*
Figure C.1 – Example arrangement of test apparatus *20*

List of tables
Table 1 – Production test load requirements and acceptance criteria *16*

Summary of pages

This document comprises a front cover, an inside front cover, pages i to ii, pages 1 to 24, an inside back cover and a back cover.

Licensed copy: University of Manchester Library, The University of Manchester Library Version correct as of 05/05/2016

Foreword

Publishing information

This British Standard is published by BSI Standards Limited, under licence from The British Standards Institution, and came into effect on 30 September 2012. It was prepared by Subcommittee FSH/17/8, *Hydrants, hoses and associated water delivery equipment*, under the authority of Technical Committee FSH/17, *Fire and rescue service equipment*. A list of organizations represented on this committee can be obtained on request to its secretary.

Supersession

This British Standard supersedes BS 750:2006, which is withdrawn.

Information about this document

This British Standard includes specific national requirements that are not specified in BS EN 14339 and BS EN 1074-6.

It has been assumed in the drafting of this British Standard that the execution of its provisions is entrusted to appropriately qualified and experienced people, for whose guidance it has been prepared.

Presentational conventions

The provisions of this standard are presented in roman (i.e. upright) type. Its requirements are expressed in sentences in which the principal auxiliary verb is "shall".

Commentary, explanation and general informative material is presented in smaller italic type, and does not constitute a normative element.

Contractual and legal considerations

This publication does not purport to include all the necessary provisions of a contract. Users are responsible for its correct application.

Compliance with a British Standard cannot confer immunity from legal obligations.

Licensed copy: University of Manchester Library, The University of Manchester Library, Version correct as of 05/05/2016

Introduction

A fire hydrant is installed primarily for use by the Fire and Rescue Service (FRS) to quickly secure a supply of water to extinguish a fire in the vicinity. A fire hydrant may also be installed for other purposes that allow a water supplier access to the pressurized water network.

NOTE A fire hydrant installed for non-fire fighting purposes is commonly known as a washout.

The water supplier is responsible for installing and maintaining fire hydrants for both purposes.

It is advisable to consult the FRS and the water supplier during the development of products conforming to this standard. In general terms, the FRS requires quick access to a supply of water from a fire hydrant using an operating key/bar and a standpipe. The water supplier does not require such quick access but carries a wider range of tools and equipment for operation and maintenance.

1 Scope

This British Standard specifies the operational and health and safety requirements for underground fire hydrants conforming to the dimensional, material and performance requirements of BS EN 14339 and BS EN 1074-6. It also includes specific national requirements not included in BS EN 14339 and BS EN 1074-6.

This British Standard applies to underground fire hydrants:

a) to be installed in a water supply system;

b) size DN80;

c) suitable for a maximum allowable operating pressure (PFA) of 1.6 MPa or 2.5 MPa (16 bar or 25 bar);

d) with operating valves; and

e) with one outlet.

It also specifies requirements for their surface box frames and covers.

2 Normative references

The following documents, in whole or in part, are normatively referenced in this document and are indispensable for its application. For dated references, only the edition cited applies. For undated references, the latest edition of the referenced document (including any amendments) applies.

Standards publications

BS 336:1989, *Specification for fire hose couplings and ancillary equipment*

BS 5163-1, *Valves for waterworks purposes – Part 1: Predominantly key-operated cast iron gate valves – Code of practice*

BS 5163-2, *Valves for waterworks purposes – Part 2: Stem caps for use on isolating valves and associated water control apparatus – Specification*

BS 5834-2:2011, *Surface boxes, guards and underground chambers for the purposes of utilities – Part 2: Specification for surface boxes*

BS 6001-3, *Sampling procedures for inspection by attributes – Part 3: Skip-lot sampling procedures*

Licensed copy: University of Manchester Library, The University of Manchester Library Version correct as of 05/05/2016

BS 6920-1, *Suitability of non-metallic products for use in contact with water intended for human consumption with regard to their effect on the quality of the water – Part 1: Specification*

BS EN 736 (all parts), *Valves – Terminology*

BS EN 1074-1:2000, *Valves for water supply – Fitness for purpose requirements and appropriate verification tests – Part 1: General requirements*

BS EN 1074-2, *Valves for water supply – Fitness for purpose requirements and appropriate verification tests – Part 2: Isolating valves*

BS EN 1074-6:2008, *Valves for water supply – Fitness for purpose requirements and appropriate verification tests – Part 6: Hydrants*

BS EN 1092-2, *Flanges and their joints – Circular flanges for pipes, valves, fittings and accessories, PN designated – Part 2: Cast iron flanges*

BS EN 1092-3, *Flanges and their joints – Circular flanges for pipes, valves, fittings and accessories, PN designated – Part 3: Copper alloy flanges*

BS EN 1561, *Founding – Grey cast irons*

BS EN 1563, *Founding – Spheroidal graphite cast iron*

BS EN 1982, *Copper and copper alloys – Ingots and castings*

BS EN 10088-1, *Stainless steels – Part 1: List of stainless steels*

BS EN 12163, *Copper and copper alloys – Rod for general purposes*

BS EN 12164, *Copper and copper alloys – Rod for free machining purposes*

BS EN 12165, *Copper and copper alloys – Wrought and unwrought forging stock*

BS EN 12167, *Copper and copper alloys – Profiles and bars for general purposes*

BS EN 12168, *Copper and copper alloys – Hollow rod for free machining purposes*

BS EN 14339:2005, *Underground fire hydrants*

BS EN ISO 7500-1, *Metallic materials – Verification of static uniaxial testing machines – Part 1: Tension/compression testing and machines – Verification and calibration of the force-measuring system*

Other publications

[N1] WATER UK. *WIS 04-52-01, Specification for polymeric anti-corrosion (barrier) coatings (as amended)*. Swindon: WRc plc, 1994. ISSN 1353-2510. [1)]

[N2] WATER UK. *WIS 04-52-02, The use of polymeric anti-corrosion (barrier) coatings*. Swindon: WRc plc, 1993. ISSN 0267-0305.[1)]

[N3] WATER UK. *WIS 04-52-03, Specification for anti-corrosion coatings on threaded fasteners (as amended)*. Swindon: WRc plc, 1995. ISSN 1353-2510.[1)]

3 Terms and definitions

For the purposes of this British Standard, the terms and definitions given in BS EN 14339 and BS EN 736 (all parts) apply.

[1)] Available from http://www.water.org.uk/

Licensed copy: University of Manchester Library: The University of Manchester Library Version correct as of 05/05/2016

4 Fire hydrants

4.1 General

As a minimum, fire hydrants conforming to this British Standard shall conform to BS EN 14339.

Fire hydrants shall have a design life of a minimum of 50 years. This shall be determined by reference to:

a) the properties of the materials used in the construction;

b) the engineering design of the fire hydrant;

c) the normal situation of installation; and

d) the conditions of use.

Where materials have time-dependent properties, these shall be selected with reference to the manufacturer's data on such properties to determine their suitability for the function and life span.

Where components of the fire hydrant are designed to be serviceable, this shall not be regarded as a reason to design for a shorter operating life.

Serviceable components shall include those having potential for accidental damage and wear from abnormal use.

The manufacturer shall ensure that parts that are considered to be subject to wear shall be available for the lifetime of the valve.

Fire hydrants shall be one of the following two types:

1) type 1 (see **4.2** and Figure 1);

2) type 2 (see **4.3** and Figure 2).

4.2 Type 1 fire hydrant

Type 1 fire hydrants shall conform to the dimensions shown in Figure 1.

The operating valve shall conform to BS EN 1074-1, BS EN 1074-2, BS 5163-1 and BS 5163-2 for PFA 16 or PFA 25 valves.

Materials for duckfoot bends shall conform to BS EN 1561 or BS EN 1563.

The Y and Z flanges DN50, PN 16 or PN 25, as shown in Figure 1, shall be compatible with the mating dimensions given in BS EN 1092-2 and BS EN 1092-3 as appropriate, using the bolts, studs or set screws specified.

NOTE 1 They are not required to be circular and are not required to have raised faces.

NOTE 2 Y or Z flanges may have a groove in the face to accommodate an "O" ring. The bolt holes may be slotted and the slots may extend to the periphery of the flange.

4.3 Type 2 fire hydrant

4.3.1 Classification

Type 2 fire hydrants shall conform to one of the following patterns.

a) Type 2a: The bonnets and/or outlets of this pattern shall be secured in such a manner that they cannot be removed when installed in a pipeline. With the exception of stem sealings, it shall be made clear in the manufacturer's literature that the fire hydrant cannot be maintained while in situ.

Figure 1 **Example of type 1 fire hydrant showing required dimensions**

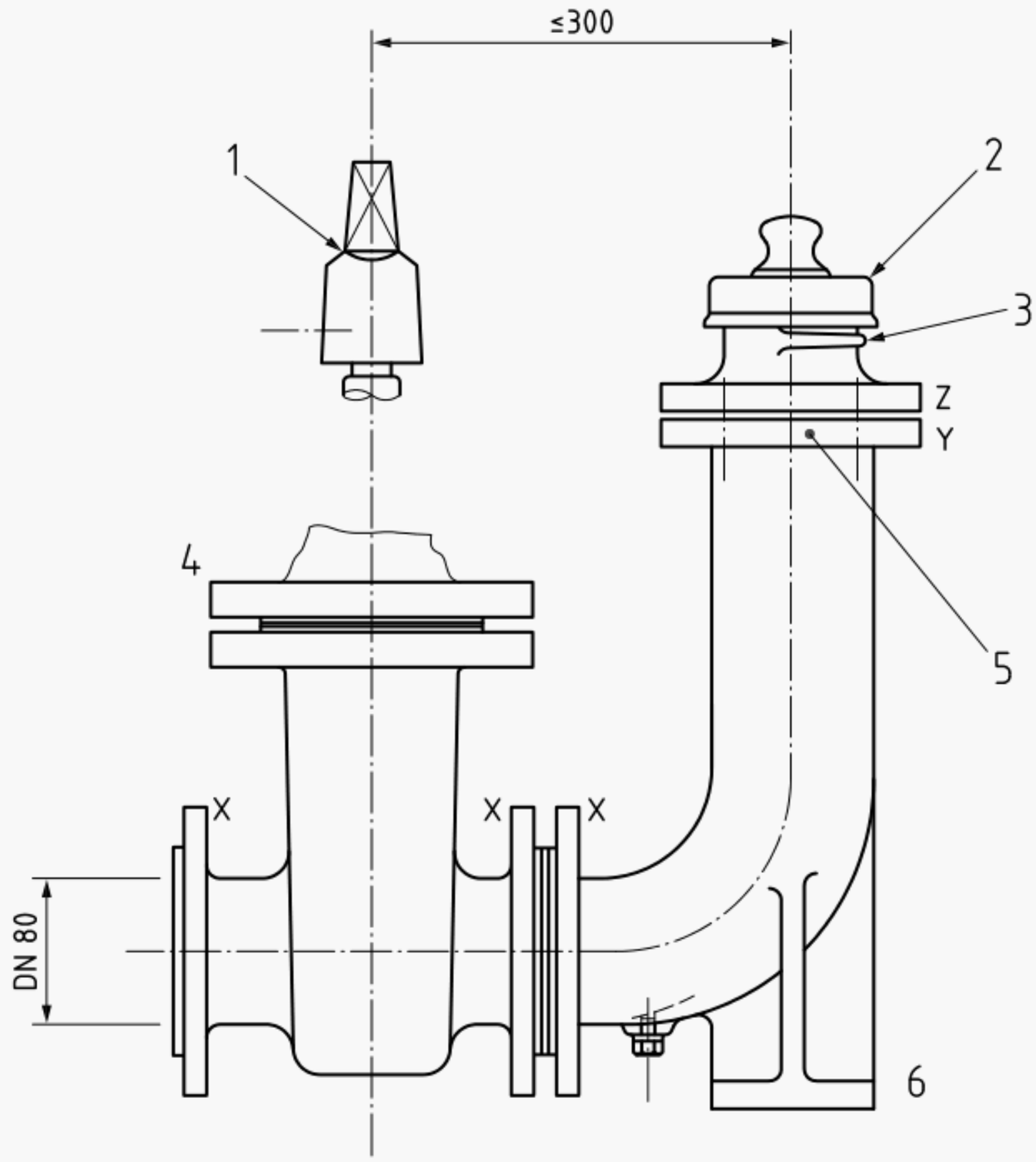

Key

1 Stem cap
2 Outlet cap
3 Outlet (for details see Figure 3)
4 Wedge-gate or other operating valve
5 65 nominal bore
6 Duckfoot bend

X, Y, Z flange

b) Type 2b: This shall be designed to facilitate maintenance of the obturator, stem, outlet and their seals, in situ, while mounted in a chamber with a surface box frame and cover in accordance with Clause **14**. They shall have:

1) Y and Z flanges DN50, PN 16 or PN 25, compatible with the mating dimensions given in BS EN 1092-2 and BS EN 1092-3 as appropriate, using bolts, studs or set screws specified; and

NOTE 1 They are not required to be circular and are not required to have raised faces.

NOTE 2 Y or Z flanges may have a groove in the face to accommodate an "O" ring. The bolt holes may be slotted and the slots may extend to the periphery of the flange.

2) a bolted connection at the body/bonnet joint with a minimum of three bolts.

c) Type 2c: This shall be designed to facilitate maintenance as type 2b. They shall have bolted connections between both the outlet and body, and the bonnet and body. These connections shall each have a minimum of three bolts.

Licensed copy: University of Manchester Library: The University of Manchester Library Version correct as of 05/05/2016

d) Type 2d: This shall be designed to facilitate maintenance as type 2b, but shall have a means of connection of the outlet and/or bonnet to the fire hydrant body other than type 2c (see **5.4**, **5.5** and **4.3.5**).

Type 2b, type 2c and type 2d fire hydrants shall be capable of being dismantled in situ using standard, readily available tools.

4.3.2 Dimensions

Type 2 fire hydrants shall conform to the dimensions shown in Figure 2.

The clearance between the back of flange X (where used), see Figure 2, and the body shall be not less than 17 mm at the position of any bolt hole.

The mating dimensions of flange X (where used), see Figure 2, shall be in accordance with BS EN 1092-2, DN80 and PN 16 or PN 25.

NOTE It is not required to be circular or full-form and may be provided with additional holes, which may be slotted, to suit other flange designs.

Figure 2 **Example of type 2 fire hydrant showing required dimensions**

Dimensions in millimetres

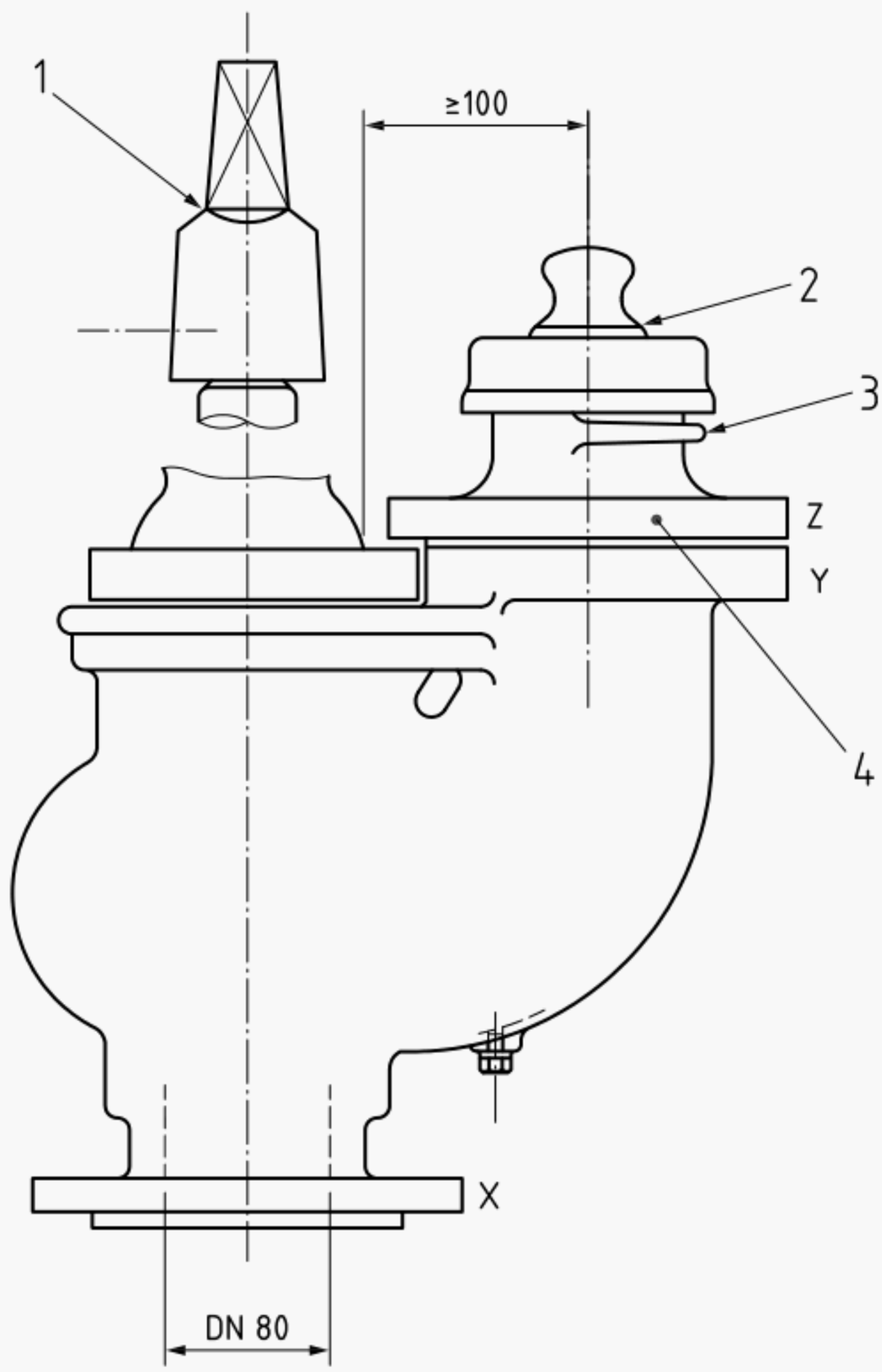

Key

1	Stem cap	3	Outlet (for details see Figure 3)
2	Outlet cap	4	65 nominal bore

X, Y, Z flange

Licensed copy: University of Manchester Library, The University of Manchester Library Version correct as of 05/05/2016

Licensed copy: University of Manchester Library, The University of Manchester Library Version correct as of 05/05/2016

4.3.3 Materials

4.3.3.1 All copper alloy materials used in the construction of fire hydrants shall conform to BS EN 1982, BS EN 12163, BS EN 12164, BS EN 12165, BS EN 12167 or BS EN 12168.

4.3.3.2 The threaded part of the valve that engages with the stem shall be copper alloy.

4.3.3.3 All components of the valve operating mechanism shall consist of materials that avoid the risk of corrosion or galling resulting in seizure or mechanical failure.

4.3.3.4 Stems of type 2 fire hydrants shall be manufactured from stainless steel conforming to BS EN 10088-1 with a minimum chromium content of 13%, or copper alloy (see **4.3.3.1**).

4.3.3.5 Stainless steel outlets shall be manufactured from grades conforming to BS EN 10088-1 with a minimum chromium content of 13%.

4.3.4 Sealings

Stem sealings shall be of one of the following two types:

a) toroidal sealing ring ("O" ring) type; or

b) other pressure actuated types of seal.

Stem seals located within the pressure retaining body of the valve shall be maintainable, in situ, while mounted in a chamber with a surface box frame and cover in accordance with Clause **14**, and depressurized at the point at which the replacement is being effected.

Where stem sealing is of the toroidal sealing ring ("O" ring) type, two such seals shall be used.

A wiper ring shall be positioned above the seals to prevent the ingress of foreign matter.

4.3.5 Bonnets

Bonnets connected by means other than those described for type 2b and type 2c shall be secured by two independent and functionally different means. These different means shall each be capable of preventing the bonnet becoming unintentionally detached in the absence of the other.

Components involved in the attachment or retention of fire hydrant bonnets shall not be made from plastics.

Bonnets connected by means other than those described for type 2b and type 2c shall conform to the type requirements in Clause **10** with:

a) both security systems in place;

b) only one of the security systems in place; and

c) only the other security system in place.

5 Outlets

5.1 The outlets shall be manufactured from copper alloy or stainless steel materials conforming to **4.3.3** and shall conform to **10.3** and **10.4**. The outlet shall conform to the dimensions shown in Figure 3.

5.2 Components involved in the attachment or retention of fire hydrant outlets shall not be made from plastics.

Licensed copy: University of Manchester Library, The University of Manchester Library Version correct as of 05/05/2016

5.3 The design of the fire hydrant and the outlet shall allow full engagement onto the outlet of a standpipe conforming to BS 336:1989, Figure 12.

5.4 Outlets connected by means other than that described for type 2b and type 2c shall be secured by two independent and functionally different means. These different means shall each be capable of preventing the outlet becoming unintentionally detached in the absence of the other.

5.5 Outlets connected by means other than that described for type 2b and type 2c shall conform to the type requirements in Clause **10** with:

a) both security systems in place;

b) only one of the security systems in place; and

c) only the other security system in place.

5.6 The screwed outlet shall be provided with a cap to cover the outlet, see Figure 3. It shall be securely attached to the fire hydrant by a chain or other flexible device.

6 Stem drive

6.1 Dimensional and performance requirements

The stem shall be provided with a cast iron cap conforming to BS 5163-2.

6.2 Closing direction

The fire hydrant shall be closed by turning the stem in a clockwise direction when viewed from above in accordance with BS EN 14339.

7 Draining system

7.1 Each type 2 fire hydrant and each duckfoot bend on a type 1 fire hydrant shall be provided with a drain boss on the outlet side. It shall be located at the lowest practicable point that allows the fitting of a blank plug, drilled drip plug or self-operating frost valve.

NOTE The requirements of the draining system are from BS EN 14339.

7.2 Where fitted to the fire hydrant, the draining system shall perform in accordance with BS EN 1074-6:2008, **5.6**. In addition, the manufacturer shall specify the volume of retained water and the time for draining.

8 Coating

8.1 All ferrous components liable to corrosion shall be prepared and coated in accordance with WIS 4-52-01 [N1] and WIS 4-52-02 [N2] or other equivalent standard.

NOTE Where an equivalent standard is used, its equivalence should be demonstrated.

8.2 Fasteners involved in the construction of a fire hydrant shall either be of an appropriate grade of stainless steel having a minimum chromium content of 13%, or be coated in accordance with WIS 4-52-03 [N3] or an equivalent standard for a barrier and galvanic coating system.

NOTE Where an equivalent standard is used, its equivalence should be demonstrated.

Figure 3 **Screwed outlet (round thread) and outlet cap showing required dimensions**

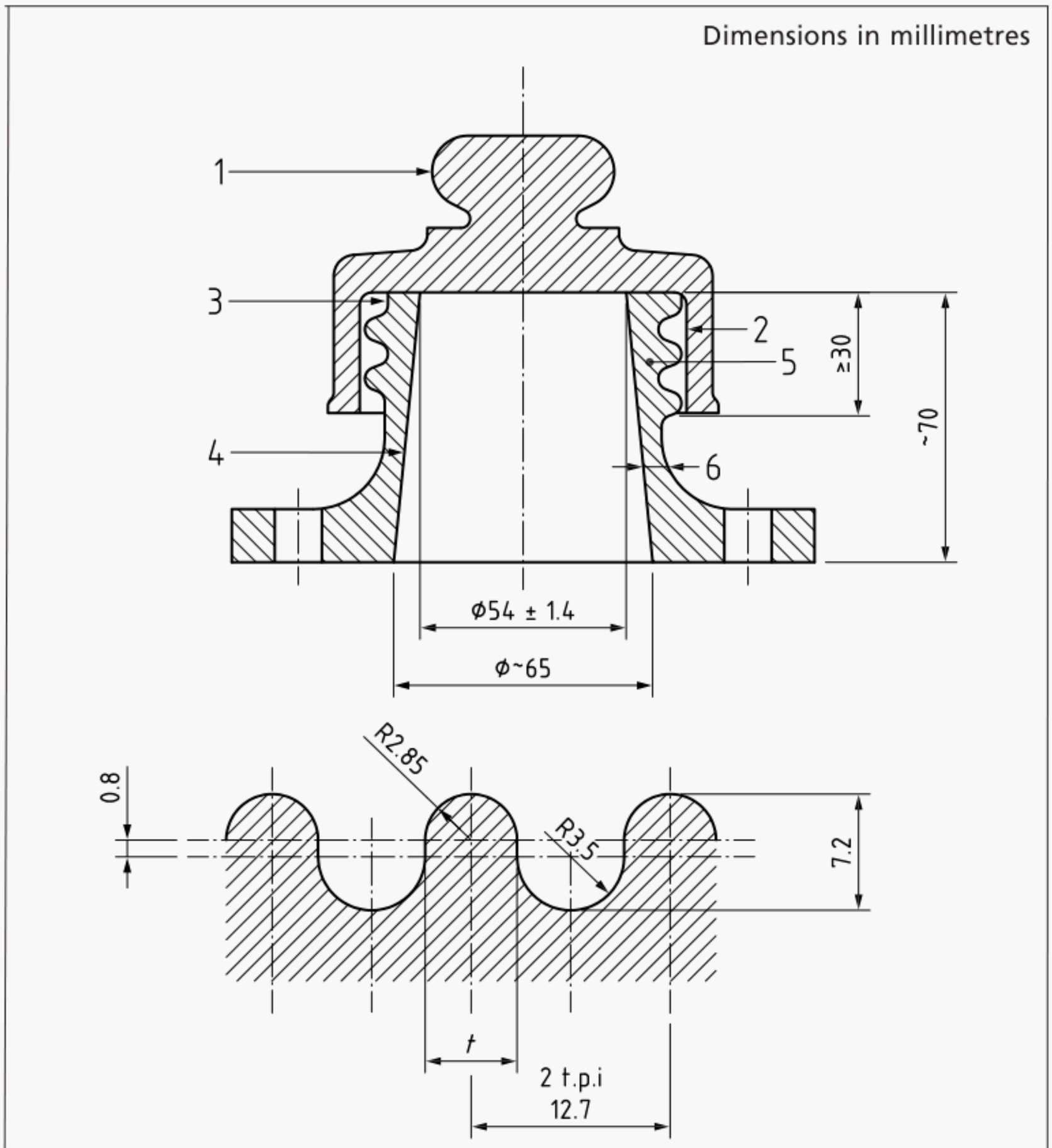

Key

1 Outlet cap

2 Cap not to be threaded

3 Feather edge to be removed

4 Taper [A)]

5 Outlet to be screwed with round thread, two threads per 25.4 mm crest diameter $82.2^{+0.6}_{-0.6}$ mm, root diameter ≤68 mm

6 Wall thickness ≥3.3 mm (i.e. minimum of 3.3 mm) of cylindrical section

t Thickness of thread $5.7^{0}_{-0.6}$ mm

[A)] Deviations from a uniform taper are permitted.

NOTE The details of female round threads for standpipes are given in BS 336.

8.3 Details of the coating process or standard used shall be specified in the manufacturer's literature.

Licensed copy: University of Manchester Library: The University of Manchester Library Version correct as of 05/05/2016

Licensed copy: University of Manchester Library, The University of Manchester Library Version correct as of 05/05/2016

9 Maintenance of water purity (potable water systems only)

All non-metallic parts of the fire hydrant, including materials, lubricants and coatings, which might be in contact with water intended for human consumption, shall be in accordance with BS 6920-1.

10 Type requirements

10.1 General

Only one set of tests shall be carried out to ascertain that the fire hydrant design meets the requirements of this British Standard, BS EN 1074-1, BS EN 1074-2 and BS EN 1074-6, and the materials, performance and dimensional requirements of BS EN 14339.

Type tests shall be carried out in accordance with Annex A.

10.2 Hydraulic characteristics

When fitted with a standard round thread outlet, see Figure 3, the fire hydrant shall have a K_v value of not less than 92. The K_v value of the fire hydrant shall be specified in the manufacturers' literature.

NOTE K_v is defined in BS EN 14339. The K_v value of 92 is equivalent to 2 000 L/min at 170 kPa (1.7 bar).

10.3 Load/deflection requirements of screwed outlets

10.3.1 Ten sample outlets shall be tested in accordance with **A.1**.

10.3.2 Five of these samples, when tested in accordance with **A.1.4.1**, shall exhibit a maximum angular deflection of not greater than 7.5° and shall have a residual angle of deflection of not greater than 2°, both measured from the unloaded datum position.

10.3.3 Additionally, the samples shall exhibit no fractures and shall not have sustained damage that prevents subsequent reconnection of the standpipe.

10.3.4 The remaining five samples, when tested in accordance with **A.1.4.2**, shall exhibit no leakage during the test.

10.4 Strength and leak tightness requirements of type 2a and type 2d screwed outlets – resistance of screwed outlets to rotational force

Outlets shall be tested in accordance with **A.2**. The following shall apply:

a) there shall be no visually detectable movement of the outlet during the application of the initial (50 ±2.5) Nm torque in either direction;

b) outlets shall withstand a torque of (300 ±15) Nm applied in both clockwise and anticlockwise directions for a minimum of 30 s while tested to the pressures specified with no visible signs of leakage at the outlet or body joint for the duration of the test;

c) there shall be no damage that impairs subsequent performance of the fire hydrant or connection of a standpipe;

d) the total rotational movement (from fully clockwise to fully anticlockwise) during the application of the (300 ±15) Nm torque shall not exceed 10°.

When tested with only one of the security systems, leakage at the outlet/body joint shall not be deemed a test failure.

10.5 Resistance of fire hydrants to operating forces

10.5.1 This test shall be carried out before the tests in **10.6** and **10.7**.

10.5.2 When subjected to a minimum hydraulic pressure of (PFA + 0.4) MPa (PFA + 4.0 bar), fire hydrants shall withstand, in both fully open and fully closed positions, a torque of (210 ±10) Nm applied simultaneously with a lateral force giving a bending moment of (500 ±25) Nm at the top of the stem with no visible signs of leakage over a period of not less than 1 min.

NOTE The outlet should be capped when tested in the fully open position.

10.6 Strength and leak tightness requirements of type 2a and type 2d bonnets – resistance of bonnets to rotational force

Bonnets shall be tested in accordance with **A.3**. The following shall apply:

a) there shall be no visually detectable rotational movement of the bonnet during the application of the initial (50 ±2.5) Nm torque in either direction;

b) the connection between the fire hydrant body and bonnet of type 2a and type 2d pattern fire hydrants shall withstand a torque of (300 ±15) Nm applied to the bonnet in both clockwise and anticlockwise directions for a minimum of 30 s;

c) the total rotational movement (from fully clockwise to fully anticlockwise) during the application of the (300 ±15) Nm torque shall not exceed 10°;

d) there shall be no visible signs of leakage during the test and no dislodgement or damage to the body, bonnet, or method of securing the bonnet to the body that impairs subsequent performance of the fire hydrant.

When tested with only one of the security systems, leakage at the bonnet/body joint shall not be deemed a test failure.

10.7 Endurance of the outlet requirement

The outlet shall be tested in accordance with Annex B. There shall be no visible signs of leakage from the outlet.

10.8 Air release

The fire hydrant shall remain intact in accordance with Annex C and leak tight in accordance with BS EN 1074-1:2000, **5.2.1** and **5.2.2**.

10.9 Obturator impact resistance

Where a 25 mm diameter bar with a hemispherical tip can enter through the outlet and make direct contact solely with the obturator, the obturator shall be resistant to impact damage in accordance with Annex D and shall subsequently meet the requirements of BS EN 1074-6:2008, **5.1.2**, **5.2.2** and **5.2.3**.

Licensed copy: University of Manchester Library: The University of Manchester Library Version correct as of 05/05/2016

Licensed copy: University of Manchester Library, The University of Manchester Library Version correct as of 05/05/2016

11 Fire hydrant assembly – resistance to internal pressure of the shell and of all pressure containing components and resistance of the obturator to differential pressure

Each fire hydrant assembly, including the outlet, shall be tested in accordance with and shall conform to BS EN 1074-6.

Any fire hydrant components expected to operate under pressure/be pressure-retaining shall be designed to withstand those pressures.

NOTE Fire hydrant assembly can include an operating mechanism, e.g. gearbox, fire hydrant security device.

12 Hydrostatic test certificate

Where requested, the manufacturer shall provide a certificate that certifies that the fire hydrant assembly conforms to Clause **11**.

13 Marking and additional data

13.1 Each fire hydrant assembly shall be clearly marked in accordance with BS EN 1074-6, BS EN 14339 and the following:

a) the number and date of this British Standard, i.e. BS 750:2012 [2]; and

b) the type designation, i.e. 1, 2a, 2b, 2c or 2d.

13.2 Additional fire hydrant data shall be provided in accordance with BS EN 14339:2005, **6.2**.

14 Surface box frames and covers

14.1 General

Surface box frames and covers shall be in accordance with BS 5834-2 with the exception of prising slot dimensions, triangular covers and link bolt fasteners.

NOTE 1 Where wedge-seating of the cover has been employed, safe interchange of the cover or frame with other similar castings might not be possible due to the bespoke nature of the pairing. Flat-seating lid arrangements might not suffer from this restriction.

NOTE 2 Where practicable, clearance between the frame and cover below the lid level should be provided for debris ingress that might cause subsequent difficulty in removing an installed cover.

NOTE 3 The dimensional tolerances required should be able to be delivered by the production processes and materials employed.

---

[2] Marking BS 750:2012 on or in relation to a product is a claim by the manufacturer that the product has been manufactured in accordance with the requirements of this British Standard. The accuracy of such a claim is solely the manufacturer's responsibility. Enquiries as to the availability of third party certification to support such claims should be addressed to the Director, Quality Assurance Division, British Standards Institution, Maylands Avenue, Hemel Hempstead, Herts HP2 4SQ in the case of certification marks administered by BSI or to the appropriate authority for other certification marks.

Licensed copy: University of Manchester Library, The University of Manchester Library Version correct as of 05/05/2016

14.2 Grading

Surface box frames and covers shall be graded as follows:

a) grade A: capable of being used in carriageways and other areas carrying fast moving, normal commercial vehicles with wheel loads [3)] up to 5 tonnes and slow-moving, specially authorized vehicles with wheel loads up to 11.5 tonnes;

b) grade B: capable of bearing wheel loads up to 5 tonnes for use in areas to which vehicles have only occasional access, e.g. footpaths, verges.

14.3 Materials

Materials for the manufacture of surface box frames and covers shall be chosen from those given in BS 5834-2.

NOTE In circumstances where installation is exposed to severe vehicular impact, non-metallic products might be vulnerable to damage.

14.4 Manufacture, workmanship and coating

All units shall conform to BS 5834-2.

14.5 Design features – clear opening

The minimum clear opening in surface box frames shall be as follows:

a) for type 1 fire hydrants: 215 mm × 495 mm;

b) for type 2 fire hydrants: 230 mm × 380 mm.

Projections at corners, required for manufacturing purposes, shall not give a resultant reduction of minimum clear opening area in excess of 1 600 mm^2 at each of the corners.

14.6 Frame depth and width

The depth of the frame shall be not less than 100 mm for grade A and 75 mm for grade B. The minimum bedding width of the frame shall be 50 mm, see Figure 4.

14.7 Surface box cover lifting arrangement

14.7.1 General

14.7.1.1 To ensure that the dynamic effects or momentum do not mask a potential for the fire hydrant cover to fall through the frame, the cover shall be one-piece unless it can be demonstrated that multiple-piece cover components fulfil the requirements of this British Standard at their respective grade.

14.7.1.2 The design of the cover shall allow its direct removal from the frame by a single user using a prising bar (of the limits of the dimensions in Figure 5) engaged in a prising slot to free, lift and rotate that end of the cover to the point where the cover lies adjacent to the frame. This shall be determined in accordance with Annex G.

[3)] The magnitude of the stated wheel load is as exerted by a stationary vehicle.

Figure 4 **Minimum bedding width of surface box frame showing required dimensions**

Dimensions in millimetres

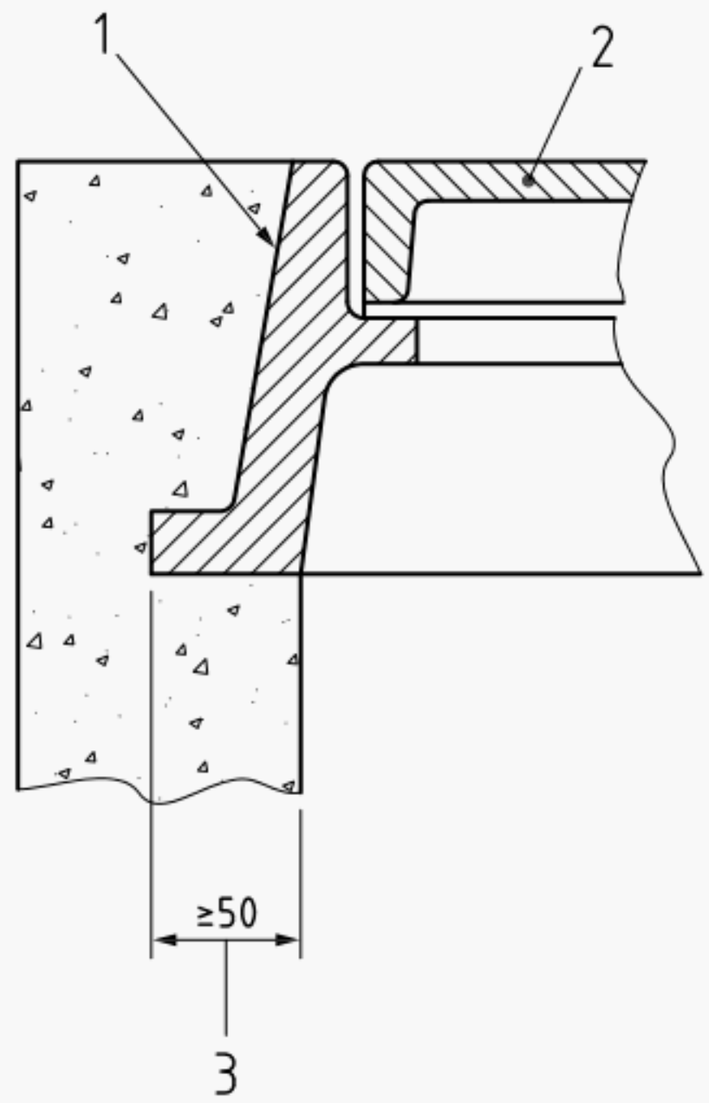

Key

1 Surface box frame

2 Surface box cover

3 Bedding width

14.7.1.3 Where the cover has more than one prising slot intended for use in cover removal, the requirement in **14.7.1.2** shall apply to the cover being lifted by each of these prising slots in succession.

NOTE This ensures that the properties of the cover/frame seat design are determined without effects of momentum or dynamic movement having an impact.

14.7.1.4 Opening of the cover using a prising bar shall not preclude an alternative opening method that uses lifting keys inserted into the keyways following cover-loosening by a prising bar (of the limits of the dimensions in Figure 5).

Figure 5 **Prising bar dimensions**

Dimensions in millimetres

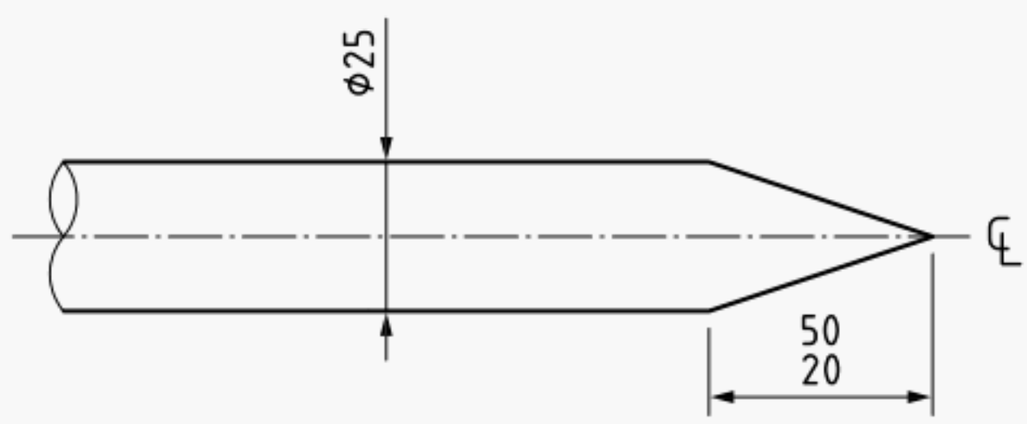

NOTE To ensure compatibility with the prising slot dimensions identified in this British Standard, prising bars should comprise: a cranked-end hexagonal-section steel wrecking bar and a 25 mm diameter straight steel bar with at least one end partially formed. Both types of prising bar should be of nominal 600 mm length.

Licensed copy: University of Manchester Library, The University of Manchester Library Version correct as of 05/05/2016

Licensed copy: University of Manchester Library: The University of Manchester Library Version correct as of 05/05/2016

14.7.1.5 Frames or covers shall be provided with a minimum of two prising slots, see Figure 6. The dimensions of the prising slots shall be:

- length (L) (35^{+10}_{-5} mm);
- width (W) 10 mm minimum;
- depth (D) ≥10 mm; and
- slot area (W × L) 750 mm^2 maximum.

NOTE 1 Prising slot geometry should be maximized (width "W") within the limits allowed to provide for the use of a wider range of prising bar tip arrangements.

*NOTE 2 The prising slots may be incorporated in either the cover section or the adjacent frame and may be of a shape other than rectangular provided they accommodate the effective use of the prising bars, see **14.7.1.2**.*

Figure 6 **Geometry of prising slots**

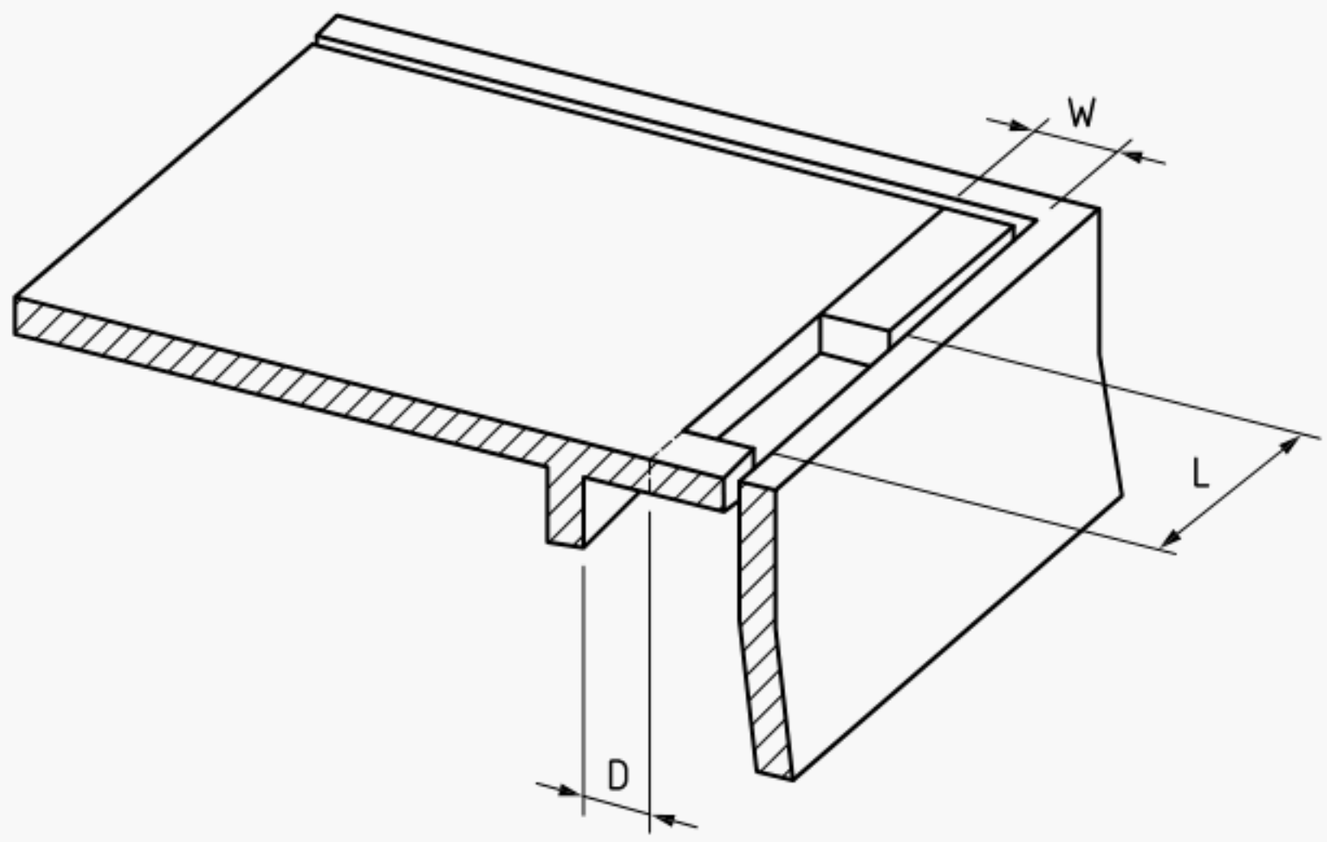

14.7.1.6 The cover shall indicate the primary prising slot.

14.7.1.7 The thickness of cover and frame material at the prising slot locations shall be appropriate for the expected leverage loads from prising bar usage. Such material thicknesses shall not show cracking or visible plastic deformation during prising bar usage that could result in future fracture of the section.

14.7.1.8 Two keyholes shall be provided for single-piece covers or one keyhole in each cover component for multiple-piece cover designs. The keyholes shall be located to allow a balanced lift during cover removal unless other deliberate design feature(s) negate this requirement. Where multiple-piece cover components are employed, they shall be loose-linked together using two or more fasteners to ensure complete cover removal during the cover opening sequence. Each fastener section shall be of 25 mm^2 minimum section. Fasteners shall not be employed to effect non-rock stability or traffic-load security and shall not adversely affect the cover removal procedure described in **14.7.1.2**. Fasteners shall be selected to prevent their poor fitting from compromising the non-rock characteristics of the cover.

14.7.2 Keyholes

Keyholes shall conform to the dimensions shown in Figure 7a).

14.7.3 Additional requirements

Where provided, lifting keys shall conform to the dimensions shown in Figure 7b).

NOTE See Annex F, item c)3.

Figure 7 **Detail of keyhole and key**

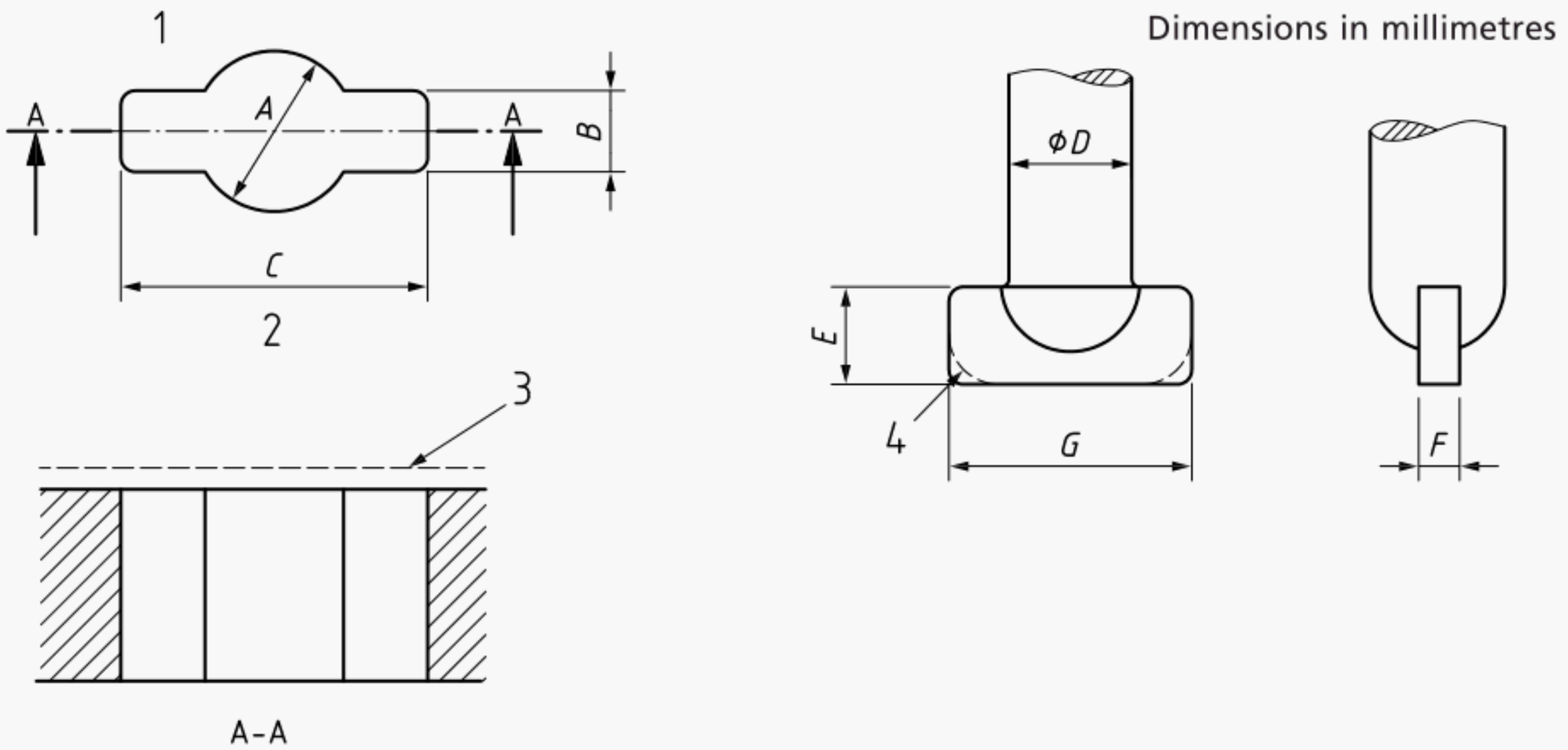

a) Keyhole

b) Key

Key

1 Open

2 Plan

3 Line of raised pattern

4 Alternative shape

	Minimum	Maximum
A	22	25
B	9	13
C	44	–

D	20 ±1
E	15 ±1
F	6 ±1
G	40 ±1

15 Marking

15.1 Surface box covers shall be clearly marked by having the words "FIRE HYDRANT" in letters not less than 30 mm high, or the initials "F.H." in letters not less than 75 mm high, cast into the cover.

15.2 In accordance with **14.2**, the following marking shall clearly be cast into the cover and frame as "BS 5834-2 and BS 750 Grade A" or "BS 5834-2 and BS 750 Grade B".

16 Type requirements

Surface box frames and covers shall be capable of preventing 2 mm (maximum) vertical-displacement of any part of the cover component(s) when a tilt test load in accordance with Table 1 and Annex G is applied to four locations around the edge of the cover.

Licensed copy: University of Manchester Library: The University of Manchester Library Version correct as of 05/05/2016

Licensed copy: University of Manchester Library, The University of Manchester Library Version correct as of 05/05/2016

17 Production requirements

Samples from the lots of surface box frames and covers, when tested in accordance with Annex G, shall be capable of supporting the design loads in Table 1 and shall conform to the acceptance criteria in Table 1.

Table 1 **Production test load requirements and acceptance criteria**

Material	Grade of frame and cover	Production test load kN	Acceptance criteria
Grey cast iron (Cl)	A B	300 125	No fracture
Spheroidal graphite cast iron (SG)	A B	200 85	No fracture or any permanent set [A)] greater than 0.2% of the distance between selected seatings

[A)] Measured at the mid-point between any two selected supporting seatings after removal of the test load.

Acceptance of the lots of frames and covers shall be in accordance with BS 6001-3, QL 2.5% inspection level II (normal inspection). The acceptance of a lot of frames and covers by the purchaser shall not prejudice the purchaser's right to reject the lot if it is subsequently found not to meet the requirements of this standard

18 Test certificate

Provision shall be made for a certificate to be made available that certifies which samples from each production lot from the delivery are in accordance with Clause **17**.

Licensed copy: University of Manchester Library, The University of Manchester Library Version correct as of 05/05/2016

Annex A (normative) Type tests for strength, security and endurance

A.1 Load/deflection test

A.1.1 Principle

This test determines the strength, security and leak tightness of the hydrant outlet and its attachment to the hydrant body under operational loads.

A.1.2 Apparatus

A.1.2.1 *Specimen fire hydrant (with outlet) or specimen outlet* (in the case of type 2b and type 2c), mounted to a rigid plate capable of enabling an internal water pressure of $(\text{PFA}+0.4)_{0}^{+0.1}$ MPa $(\text{PFA}+4)_{0}^{+1}$ bar to be applied.

A.1.2.2 *A standpipe of sufficient length or a blanking cap* (modified to have a suitable loading bar connected to the test outlet). The standpipe or loading bar shall be of sufficient length that the specified bending moment can be generated by a force (F) applied at a minimum distance of 900 mm from the mounting point of the outlet under test. The test arrangement is shown in Figure A.1.

The force (F) is applied in a vertical plane in either an upward or downward direction. The force is such as to produce a minimum bending moment of 1 500 Nm for the test procedure described in **A.1.4.1** and a minimum bending moment of 750 Nm together with a hydrostatic pressure of $(\text{PFA}+0.4)_{0}^{+0.1}$ MPa $(\text{PFA}+4)_{0}^{+0.1}$ bar for the test procedure of **A.1.4.2**.

A.1.3 Test specimens

Ten specimen outlets, or ten specimen fire hydrants for type 2a and type 2d, in the condition that they are supplied to the user are randomly selected. Five samples are used for the first part of the procedure (see **A.1.4.1**) and five for the second (see **A.1.4.2**).

A.1.4 Procedure

A.1.4.1 Apply a minimum bending moment of 1 500 Nm, as described in **A.1.2**, for 10 s. Document the angular deflection at this point. Remove the applied force and, after 2 min, measure the residual angular deflection.

A.1.4.2 With a hydrostatic pressure of $(\text{PFA}+0.4)_{0}^{+0.1}$ MPa $(\text{PFA}+4.0)_{0}^{+0.1}$ bar applied within the outlet, apply a minimum bending moment of 750 Nm, as described in **A.1.2**, for a period of 1 min checking for leaks. At the end of this period remove the applied force and hydrostatic pressure.

A.1.4.3 Repeat the test procedure in **A.1.4.1** and **A.1.4.2** on the same sample three times with the force applied at approximately 45°, 90° and 180° from the position of the first test.

A.1.4.4 Repeat the test procedure in **A.1.4.3** on the same sample in, potentially, the most vulnerable orientation of the outlet to the force, unless this position has already been covered by the test procedure in **A.1.4.2** and **A.1.4.3**.

A.2 Test for rotational resistance of outlet

A.2.1 Principle

This test determines the strength, security and leak tightness of the hydrant outlet to the hydrant body under operational loads.

A.2.2 Apparatus

A.2.2.1 *Test rig*, capable of withstanding test forces provided to mount the fire hydrant.

Figure A.1 **Load/deflection test apparatus**

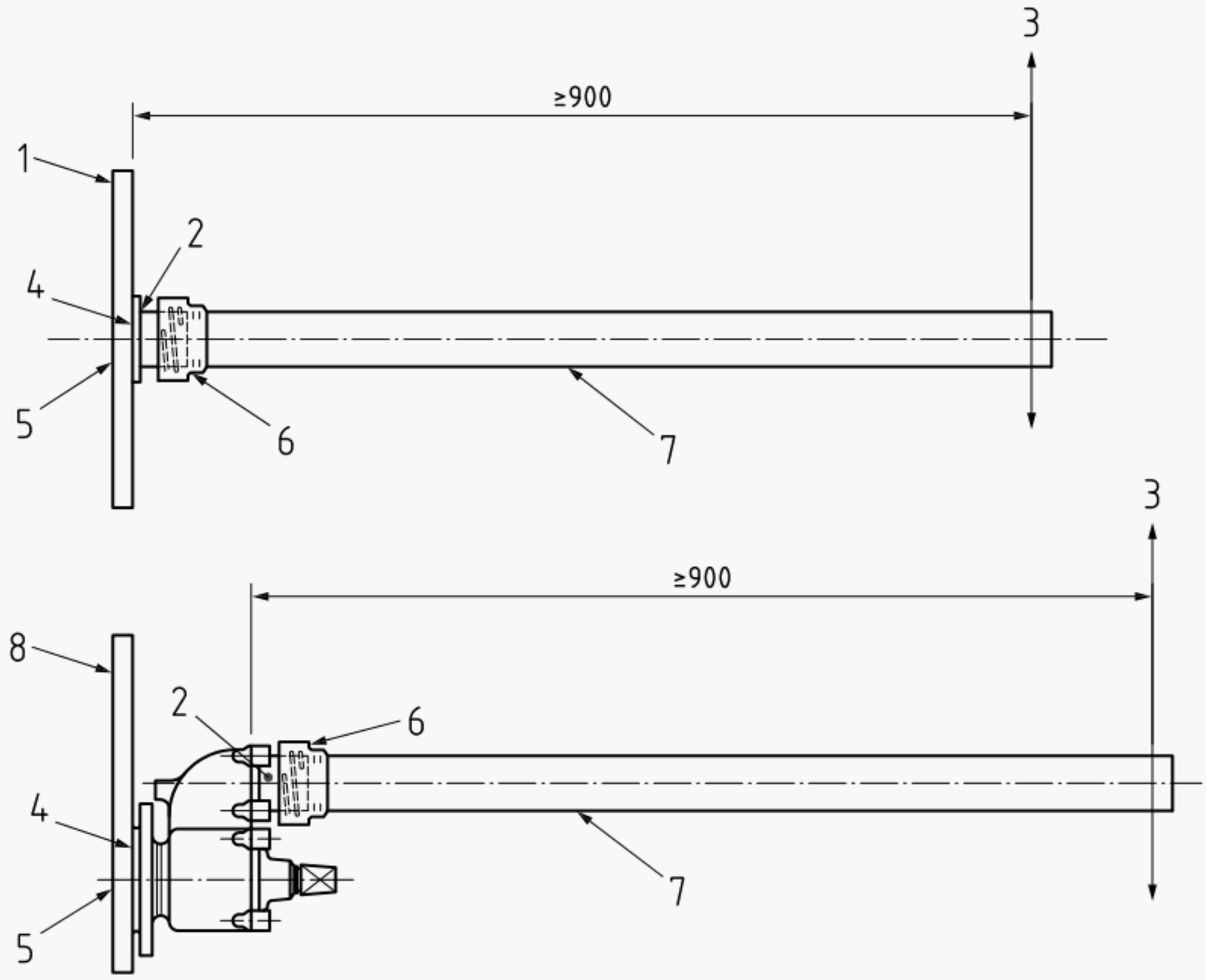

Key

1	Rigid support plate for outlet	5	Hole in plate to enable test pressure application to outlet
2	Outlet	6	Blanking cap and washer or standpipe
3	Force applied (see **10.3**)	7	Loading bar or standpipe
4	Joint (or proprietary joint assembly)	8	Rigid support plate for fire hydrant

A.2.3 Test specimens

Test one randomly selected fire hydrant in delivery condition (including any proprietary joints).

A.2.4 Procedure

A.2.4.1 Mount and secure the fire hydrant by its inlet connection to the test rig. Fit a blanking cap to the outlet and, if necessary, provide a means of rigidly securing it to the threaded portion of the outlet to prevent the cap being removed during the anticlockwise test.

A.2.4.2 Apply a torque of (50 ±2.5) Nm directly to the outlet in a clockwise direction, hold for a minimum of 30 s and observe for any visual movement. Repeat the test in an anticlockwise direction and observe for any visual movement.

A.2.4.3 Repeat **A.2.4.2** with a torque of (300 ±15) Nm and measure the total rotational movement (from fully clockwise to fully anticlockwise) of the outlet.

A.2.4.4 Repeat **A.2.4.3** with an internal hydrostatic pressure of $(PFA+0.4)^{+0.1}_{0}$ MPa $(PFA+4.0)^{+0.1}_{0}$ bar. Examine the outlet/body joint during the test for visible signs of leakage.

Licensed copy: University of Manchester Library, The Version correct as of 05/05/2016

Licensed copy: University of Manchester Library: The University of Manchester Library Version correct as of 05/05/2016

A.3 Test for rotational resistance of bonnets

A.3.1 Principle

This test determines the strength, security and leak tightness of the hydrant bonnet, for type 2 hydrants, to the hydrant body under operational loads.

A.3.2 Apparatus

A.3.2.1 *Test rig*, capable of withstanding test forces provided to mount the fire hydrant.

A.3.3 Test specimens

Test one randomly selected fire hydrant in delivery condition (including any proprietary joints).

A.3.4 Procedure

A.3.4.1 Mount the fire hydrant on the test rig and fit a blanking cap to the outlet. Provide a means of applying a torque either directly to the bonnet or by any suitable device that does not add to the strength of the body/bonnet connecting system.

A.3.4.2 Apply a torque of (50 ±2.5) Nm directly to the bonnet in a clockwise direction, hold for a minimum of 30 s and observe for any visual movement. Repeat the test in an anticlockwise direction and observe for any visual movement.

A.3.4.3 Repeat **A.3.4.2** with a torque of (300 ±15) Nm and measure the total rotational movement (from fully clockwise to fully anticlockwise) of the bonnet.

A.3.4.4 Repeat **A.3.4.3** with an internal hydrostatic pressure of $(PFA+0.4)^{+0.1}_{0}$ MPa $(PFA+4.0)^{+0.1}_{0}$ bar. Examine the bonnet/body joint during the test for visible signs of leakage.

Annex B (normative) Type hydrostatic tests for screwed outlets

B.1 Principle

This test is to determine the durability of the hydrant outlet under conditions of simulated operational use.

B.2 Apparatus

B.2.1 *Test rig*, capable of withstanding test forces shall be provided to mount the fire hydrant.

B.3 Test specimens

Test one randomly selected outlet in delivery condition.

B.4 Procedure

B.4.1 Mount the outlet to a fire hydrant. Fit a standpipe or blanking cap in accordance with BS 336 to the outlet with a torque of (150 ±7.5) Nm and then remove it. Repeat this procedure 200 times.

B.4.2 Blank off the screwed outlet using a blanking cap and connect the other end to a pressurized water supply.

B.4.3 Subject the screwed outlet to a hydraulic pressure of not less than 1.5 × PFA for a period of not less than 1 min.

*NOTE The test may be carried out in conjunction with the tests on the fire hydrant (see Clause **10** and Clause **11**).*

Licensed copy: University of Manchester Library, The University of Manchester Library Version correct as of 05/05/2016

Annex C (normative) Air release test

C.1 Principle

The air release test determines the fitness for purpose of a hydrant following any high velocity air release that may occur occasionally and unintentionally during the normal use of the hydrant over 50 years and serves to test the effect on its sealing capacity and durability.

It is expected that under normal circumstances the volume of air trapped at the maximum internal pressure of 16 bar is equivalent to that volume contained within a riser pipe 80 mm internal diameter and 500 mm long (2500 cc) plus any volume generated within the closed valve at atmospheric pressure.

The air release method is based on normal practice of opening the valve until air is first expelled and with a further 60° rotation of the stem, which usually equates to an aperture between the plug and seat of the equivalent to approximately 5% of the full bore.

The air is expelled at a constant rate at the same pressure until all air is exhausted.

C.2 Apparatus

Use test equipment suitable for operating at 16 bar hydrostatic and pneumatic. Install the hydrant vertically on top of the container. Take appropriate risk assessment and necessary safety precautions when conducting this test.

During pneumatic testing, operate the hydrant remotely.

Figure C.1 **Example arrangement of test apparatus**

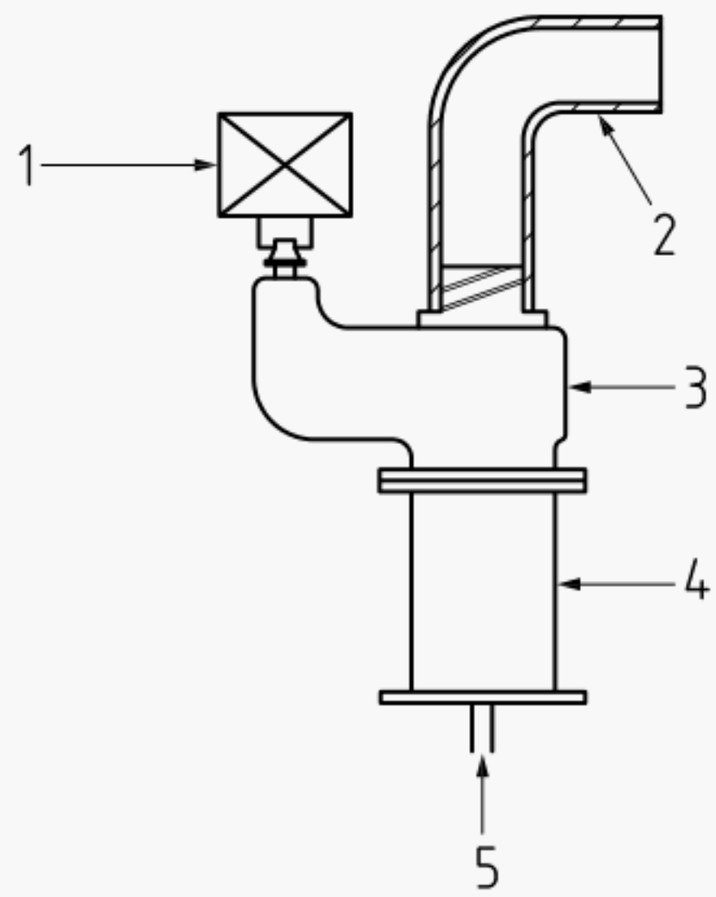

Key

1	Remote actuator	4	Container
2	Standpipe	5	Pressure inlet
3	Hydrant		

C.3 Procedure

C.3.1 Ensure the hydrant is conditioned at 20 °C (±2 °C) for a period of 6 h. Mount the hydrant to a container of at least 2500 cc internal volume. Close the hydrant valve to the maximum operating torque (MOT).

Licensed copy: University of Manchester Library, The University of Manchester Library Version correct as of 05/05/2016

Annex C (normative) Air release test

C.1 Principle

The air release test determines the fitness for purpose of a hydrant following any high velocity air release that may occur occasionally and unintentionally during the normal use of the hydrant over 50 years and serves to test the effect on its sealing capacity and durability.

It is expected that under normal circumstances the volume of air trapped at the maximum internal pressure of 16 bar is equivalent to that volume contained within a riser pipe 80 mm internal diameter and 500 mm long (2500 cc) plus any volume generated within the closed valve at atmospheric pressure.

The air release method is based on normal practice of opening the valve until air is first expelled and with a further 60° rotation of the stem, which usually equates to an aperture between the plug and seat of the equivalent to approximately 5% of the full bore.

The air is expelled at a constant rate at the same pressure until all air is exhausted.

C.2 Apparatus

Use test equipment suitable for operating at 16 bar hydrostatic and pneumatic. Install the hydrant vertically on top of the container. Take appropriate risk assessment and necessary safety precautions when conducting this test.

During pneumatic testing, operate the hydrant remotely.

Figure C.1 **Example arrangement of test apparatus**

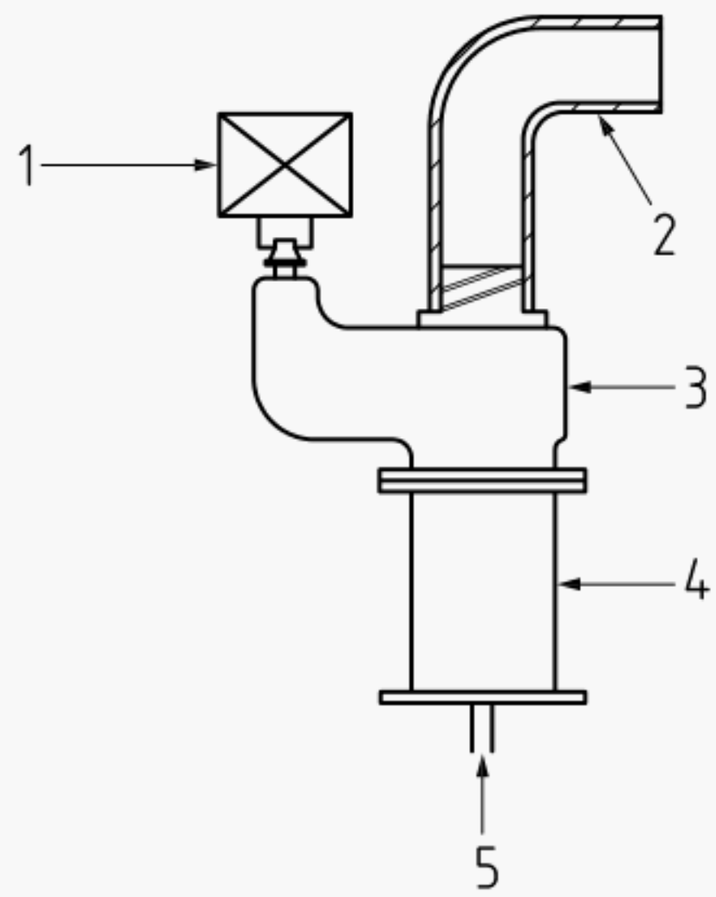

Key

1	Remote actuator	4	Container
2	Standpipe	5	Pressure inlet
3	Hydrant		

C.3 Procedure

C.3.1 Ensure the hydrant is conditioned at 20 °C (±2 °C) for a period of 6 h. Mount the hydrant to a container of at least 2500 cc internal volume. Close the hydrant valve to the maximum operating torque (MOT).

Licensed copy: University of Manchester Library, The Version correct as of 05/05/2016

Annex F (normative) Information to be supplied by the purchaser

The purchaser should supply the manufacturer with the following information:

a) information on options detailed in this British Standard common to both type 1 and type 2 fire hydrants:

   1) whether a type 1 fire hydrant or type 2a, 2b, 2c or 2d fire hydrant is required (see Clause **4**);

   2) form of stem sealing required (see **4.3.4**);

   3) form of draining system required (see Clause **7**); and

   4) whether a certificate of test is required (see Clause **12**).

b) suggested additional information common to both type 1 and type 2 fire hydrants:

   1) whether valves are for use in or transport through the tropics;

   2) whether valves are for sea water or other non-potable water use;

   3) special provisions for despatch;

   4) need for any special coatings; and

   5) whether witnessing of tests is desired.

c) information specific to surface box frames and covers:

   1) whether grade A or grade B design (see **14.2**);

   2) whether for type 1 and type 2 fire hydrants (see **14.5**);

   3) whether lifting key(s) are required (see **14.7.3**);

   4) whether valve opening direction is required to be marked; if so, the direction of opening;

   5) whether a certificate of test is required (see Clause **18**); and

   6) actual frame depth required if different from the 100 mm minimum requirement.

Annex G (normative) Type and production loading tests for surface box frames and covers

G.1 Principle

The following tests are intended to prove the cover and frame design's structural integrity and to provide an indication of a cover's seating stability under simulated traffic-load.

G.2 Apparatus

G.2.1 *Standard frame*, to be used as a supporting frame.

G.2.2 *Bearing block*, 300 mm × 200 mm, of hardwood faced with hard rubber or other resilient material. Ensure that it is sufficiently rigid so that the load on the cover is evenly distributed over the full area of the block. For the tilt test, the bearing block rubber-facing shall be 10 mm nominal thickness.

G.2.3 *Device, preferably a hydraulic testing machine, for applying the load*, capable of applying a load at least 25% greater than 300 kN for grade A and 125 kN for grade B. Where used, a testing machine shall be in accordance with the accuracy requirements for grade A or grade B testing machines given in BS EN ISO 7500-1. Ensure that, if any other load-measuring device is used, it is accurate to within 2% of the indicated load. As the tilt test requires the bearing

Licensed copy: University of Manchester Library, The University of Manchester Library Version correct as of 05/05/2016

block to overhang the side of the cover and frame, rigid support to the overhanging portion of the bearing block is provided and arranged to sit level with the upper edge of the frame throughout the tilt test.

G.2.4 *Measuring device*, accurate to 0.1 mm, suitable for indicating deflection measurements on spheroidal graphite cast iron units.

G.3 Type test (grey cast iron and spheroidal graphite cast iron frames and covers)

G.3.1 Procedure

G.3.1.1 Following the application of a bedding-in load in accordance with BS 5834-2:2011, Annex A, test the cover and frame in accordance with Clause **16** using the apparatus described in **G.2**.

G.3.1.2 Apply the test load to a new cover and frame in accordance with Clause **16**. Apply the load through the bearing block placed on the cover so that nominally 75% of the bearing block is located outside of the perimeter of the upper frame edge. Repeat the test in four separate locations around the perimeter of the cover, each nominally 90° to the last test position arranged around the (vertical) central axis of the cover. Apply the load in each test location for a nominal period of 30 s.

NOTE During the tilt test, the rectangular bearing block orientation on the cover and frame might be at the discretion of the type testing authority.

G.3.1.3 Following the load test in BS 5834-2:2011, Annex A, firmly restrain the frame component on a level rigid surface and verify the cover conforms to the removal operation in **14.7.1.2**.

G.3.1.4 Support the cover in the frame (**G.2.1**) and position the bearing block (**G.2.2**) centrally on and wholly within the perimeter of the unit or section(s) being tested.

G.3.1.5 Apply a test load of 300 kN for grade A and 125 kN for grade B without shock, and sustain it for a minimum of 30 s.

G.4 Production batch test

G.4.1 Grey cast iron frames and covers

G.4.1.1 Procedure

G.4.1.1.1 Support the cover in the frame (**G.2.1**) and position the bearing block (**G.2.2**) centrally on and wholly within the perimeter of the unit being tested.

G.4.1.1.2 Apply the appropriate test load from Table 1 without shock and sustain it for a minimum of 30 s.

G.4.2 Spheroidal graphite cast iron frames and covers

G.4.2.1 Procedure

G.4.2.1.1 Support the cover in the frame (**G.2.1**) and position the bearing block (**G.2.2**) centrally on and wholly within the perimeter of the unit being tested.

G.4.2.1.2 Before the load is applied take an initial reading with the measuring device (**G.2.4**) at a point midway between two selected supporting seatings to establish a datum point.

G.4.2.1.3 Where it is not practicable to make this measurement exactly on the line drawn between the two supporting seatings, take it on a line parallel to, and as near as possible to, this line.

G.4.2.1.4 Apply the appropriate test load from Table 1 without shock five times and sustain alternating maximum and zero loads for minimum periods of 20 s; take a second reading at the datum point.

G.4.2.2 Expression of results

Record the difference between the two readings as the permanent set.

Licensed copy: University of Manchester Library, The University of Manchester Library, Version correct as of 05/05/2016

Licensed copy. University of Manchester Library. The University of Manchester Library Version copy as of 05/05/2016

This page deliberately left blank

NO COPYING WITHOUT BSI PERMISSION EXCEPT AS PERMITTED BY COPYRIGHT LAW

Licensed copy: University of Manchester Library, The University of Manchester Library Version correct as of 05/05/2016

British Standards Institution (BSI)

BSI is the national body responsible for preparing British Standards and other standards-related publications, information and services.

BSI is incorporated by Royal Charter. British Standards and other standardization products are published by BSI Standards Limited.

About us

We bring together business, industry, government, consumers, innovators and others to shape their combined experience and expertise into standards -based solutions.

The knowledge embodied in our standards has been carefully assembled in a dependable format and refined through our open consultation process. Organizations of all sizes and across all sectors choose standards to help them achieve their goals.

Information on standards

We can provide you with the knowledge that your organization needs to succeed. Find out more about British Standards by visiting our website at bsigroup.com/standards or contacting our Customer Services team or Knowledge Centre.

Buying standards

You can buy and download PDF versions of BSI publications, including British and adopted European and international standards, through our website at bsigroup.com/shop, where hard copies can also be purchased.

If you need international and foreign standards from other Standards Development Organizations, hard copies can be ordered from our Customer Services team.

Subscriptions

Our range of subscription services are designed to make using standards easier for you. For further information on our subscription products go to bsigroup.com/subscriptions.

With **British Standards Online (BSOL)** you'll have instant access to over 55,000 British and adopted European and international standards from your desktop. It's available 24/7 and is refreshed daily so you'll always be up to date.

You can keep in touch with standards developments and receive substantial discounts on the purchase price of standards, both in single copy and subscription format, by becoming a **BSI Subscribing Member**.

PLUS is an updating service exclusive to BSI Subscribing Members. You will automatically receive the latest hard copy of your standards when they're revised or replaced.

To find out more about becoming a BSI Subscribing Member and the benefits of membership, please visit bsigroup.com/shop.

With a **Multi-User Network Licence (MUNL)** you are able to host standards publications on your intranet. Licences can cover as few or as many users as you wish. With updates supplied as soon as they're available, you can be sure your documentation is current. For further information, email bsmusales@bsigroup.com.

Revisions

Our British Standards and other publications are updated by amendment or revision.

We continually improve the quality of our products and services to benefit your business. If you find an inaccuracy or ambiguity within a British Standard or other BSI publication please inform the Knowledge Centre.

Copyright

All the data, software and documentation set out in all British Standards and other BSI publications are the property of and copyrighted by BSI, or some person or entity that owns copyright in the information used (such as the international standardization bodies) and has formally licensed such information to BSI for commercial publication and use. Except as permitted under the Copyright, Designs and Patents Act 1988 no extract may be reproduced, stored in a retrieval system or transmitted in any form or by any means – electronic, photocopying, recording or otherwise – without prior written permission from BSI. Details and advice can be obtained from the Copyright & Licensing Department.

Useful Contacts:

Customer Services
Tel: +44 845 086 9001
Email (orders): orders@bsigroup.com
Email (enquiries): cservices@bsigroup.com

Subscriptions
Tel: +44 845 086 9001
Email: subscriptions@bsigroup.com

Knowledge Centre
Tel: +44 20 8996 7004
Email: knowledgecentre@bsigroup.com

Copyright & Licensing
Tel: +44 20 8996 7070
Email: copyright@bsigroup.com

BSI Group Headquarters

389 Chiswick High Road London W4 4AL UK

bsi.

...making excellence a habit.™