BS 9266:2013

BSI Standards Publication

Design of accessible and adaptable general needs housing – Code of practice

Licensed copy: IP Login, University of Oxford, Version correct as of

bsi.

...making excellence a habit.™

Publishing and copyright information

The BSI copyright notice displayed in this document indicates when the document was last issued.

© The British Standards Institution 2013

Published by BSI Standards Limited 2013

ISBN 978 0 580 72024 6

ICS 11.180.99; 91.040.01

The following BSI references relate to the work on this document:
Committee reference B/559
Draft for comment 12/30230430 DC; 12/30270897 DC

Publication history

First published as DD 266, December 2007
First published as BS 9266, July 2013

Amendments issued since publication

Date	Text affected

Licensed copy: IP Login, University of Oxford, Version correct as of 04/05/2016

Contents

Foreword *iii*

Introduction *v*

1 Scope *1*

2 Normative references *1*

3 Terms and definitions *2*

4 General principles of accessibility *2*
4.1 Facilities requiring step-free access from the entrance *2*
4.2 Provision of an accessible or adaptable bathroom *3*
4.3 Manoeuvring within a dwelling *3*

5 Car parking and setting-down points *3*
5.1 Individual houses with on-plot parking *3*
5.2 Dwellings without on-plot parking *4*
5.3 Setting-down points *5*

6 External access routes *5*
6.1 Access route gradients *5*
6.2 Surface of access routes *5*
6.3 Access routes from car parking spaces *6*
6.4 Access routes to blocks of flats *6*
6.5 Access routes within individual house plots *6*
6.6 Hazards on access routes *7*
6.7 Ramped access routes *7*
6.8 Steps on access routes *8*
6.9 Handrails to ramps and steps *10*
6.10 Lighting of access routes to blocks of flats *11*

7 Entrances to individual houses or blocks of flats *11*
7.1 External lighting to entrances *11*
7.2 Weather protection *11*
7.3 External approach area *12*
7.4 Door entry and call systems *12*
7.5 Door opening and locking hardware *12*
7.6 Entrance doors *13*
7.7 Thresholds to external entrances *15*
7.8 Entrance matting in blocks of flats *15*

8 Communal areas within blocks of flats *16*
8.1 Identification of access routes to individual flats *16*
8.2 Design of common steps and stairs *16*
8.3 Handrails *16*
8.4 Lighting *16*
8.5 Visual contrast between surfaces or building elements *16*
8.6 Thresholds to entrance doors to individual flats *17*
8.7 Corridor widths *17*
8.8 Means of escape from flats *17*

9 Circulation areas within a dwelling *17*
9.1 Entrance hall within a dwelling *17*
9.2 Stairs *17*
9.3 Dimensions of internal circulation spaces *18*
9.4 Effective clear width of internal doors *18*
9.5 Clear space at the leading edge of doors *18*
9.6 Thresholds to internal doors *18*
9.7 Means of escape from dwellings *18*

10 Vertical transportation within blocks of flats or individual houses *19*
10.1 Vertical transportation in blocks of flats *19*

Licensed copy: IP Login, University of Oxford, Version correct as of 04/05/2010

10.2 Vertical transportation in dwellings of two or more storeys *20*

11 Services *21*
11.1 Location of outlets, switches and controls *21*
11.2 Electrical and wired services *22*
11.3 Mains services *23*

12 WC and bathroom facilities *23*
12.1 Accessible WC *23*
12.2 Accessible washbasin *24*
12.3 Accessible or adaptable bathroom *24*
12.4 Space and drainage provision for an accessible shower *28*
12.5 Structural provision for grab rails and other support equipment *28*

13 Other facilities and amenities *29*
13.1 Living/socializing space *29*
13.2 Kitchen *29*
13.3 Bedrooms *29*
13.4 Temporary bed space *30*
13.5 Windows and glazed doors *30*
13.6 Balconies and terraces *31*
13.7 Storage facilities outside the dwelling *31*
13.8 Waste and recycling facilities *31*

Annexes
Annex A (informative) Car park management *32*
Annex B (informative) Relationship between going, gradient and rise of ramps *32*

Bibliography *34*

List of figures
Figure 1 – Minimum ramp going in relation to the rise of the flight *8*
Figure 2 – The use of a "corduroy" hazard warning surface and handrails on an external stepped access to a block of flats *10*
Figure 3 – Examples of effective clear width through a doorway *14*
Figure 4 – Example of door location and side clearance on the pull side *15*
Figure 5 – Heights to the centre of outlets, switches, controls and meters *21*
Figure 6 – Example of an entrance-level accessible WC compartment with provision for a future level-access shower *25*
Figure 7 – Example of an accessible WC compartment with provision for a future low-level shower *26*
Figure 8 – Example of an accessible bathroom with provision for a future level-access shower *27*

List of tables
Table 1 – Effective clear width of gates to individual house plots *7*
Table 2 – Effective clear width of internal dwelling doors *18*
Table 3 – Location and position of outlets for future power and lighting installations in dwellings *22*
Table B.1 – Relationship between going, gradient and rise of ramps *33*

Summary of pages

This document comprises a front cover, an inside front cover, pages i to vi, pages 1 to 36, an inside back cover and a back cover.

Licensed copy: IP Login, University of Oxford, Version correct as of 04/05/2013

Foreword

Publishing information

This British Standard is published by BSI Standards Limited, under licence from The British Standards Institution, and came into effect on 31 July 2013. It was prepared by Technical Committee B/559, *Access to buildings for disabled people*. A list of organizations represented on this committee can be obtained on request to its secretary.

Supersession

This British Standard supersedes DD 266:2007, which is withdrawn.

Relationship with other publications

This British Standard supplements BS 8300:2009+A1, which, although it incorporates certain recommendations on dwellings into the general guidance, does not feature housing as a building type, but is concerned mainly with public, commercial and service buildings.

BS 9266 provides advice on the design of accessible and adaptable general needs housing and has drawn on a number of sources including the criteria from the *Lifetime homes design guide* [1] and the government document *Lifetime Homes, Lifetime Neighbourhoods* [2]. For more information on the 16 lifetime homes criteria, refer to www.lifetimehomes.org.uk [1)].

BS 9266 is concerned largely with access to and within, and use of, residential buildings. Recommendations for means of escape in the event of fire, and for fire safety generally, are given in BS 9999 and BS 9991.

Information about this document

This document converts DD 266 into a full British Standard. It is a full revision of the Draft for Development, and incorporates the following principal changes:

- change of title and clarification of scope;
- significant restructure of the document;
- general revision to take into account other recent guidance, including BS 8300:2009+A1;
- revised recommendations for stairs and ramps;
- revised recommendations for lifts;
- revised and simplified recommendations for bathrooms and WCs;
- additional guidance on lighting.

Much new housing in Britain is widely recognized to be spatially constrained. The recommendations in this standard have been developed in the light of these constraints, and in the knowledge that households might have to make compromises (e.g. reducing furniture), to accommodate family members who have developed or acquired temporary or permanent impairments.

With reasonable space and careful attention to the design of kitchens, bathrooms, and the amount and location of storage space, homes designed in accordance with BS 9266 might be suitable for some wheelchair users. However, many wheelchair users and some older people with particular access, storage and circulation needs might need the space and circulation standards of a home designed in accordance with the *Wheelchair housing design guide* [3].

---

1) Last accessed 25 July 2013.

Licensed copy: IP Login, University of Oxford, Version correct as of 04/05/2010

Use of this document

As a code of practice, this British Standard takes the form of guidance and recommendations. It should not be quoted as if it were a specification and particular care should be taken to ensure that claims of compliance are not misleading.

Any user claiming compliance with this British Standard is expected to be able to justify any course of action that deviates from its recommendations.

It has been assumed in the preparation of this British Standard that the execution of its provisions will be entrusted to appropriately qualified and experienced people, for whose use it has been produced.

Presentational conventions

The provisions in this standard are presented in roman (i.e. upright) type. Its recommendations are expressed in sentences in which the principal auxiliary verb is "should".

Commentary, explanation and general informative material is presented in smaller italic type, and does not constitute a normative element.

The word "should" is used to express recommendations of this standard. The word "may" is used in the text to express permissibility, e.g. as an alternative to the primary recommendation of the clause. The word "can" is used to express possibility, e.g. a consequence of an action or an event.

Notes and commentaries are provided throughout the text of this standard. Notes give references and additional information that are important but do not form part of the recommendations. Commentaries give background information.

Contractual and legal considerations

This publication does not purport to include all the necessary provisions of a contract. Users are responsible for its correct application.

Compliance with a British Standard cannot confer immunity from legal obligations.

Licensed copy: IP Login, University of Oxford, Version correct as of 04/05/2013

Introduction

This British Standard explains how, by following the key principles of inclusive design, general needs housing can be made sufficiently flexible and convenient to meet the existing and changing needs of more households, and so give people more choice over where they live.

The population of the United Kingdom, in common with most of mainland Europe, is ageing and its numbers increasing. [2)] The balance (ignoring for these purposes any changes in retirement ages) between the working population and those over 65 is expected to tilt further towards the latter.

In consequence, average household sizes have fallen, with the proportion of one- and two-person households increasing and that of three-, four- and five-person households falling.

The net result of these demographic trends is that the number of households is expected to grow by about 230 000 per year from 2013 until 2033.

Meanwhile, fewer and smaller homes are being built in the UK.

In 2010 the number of new houses built fell to just over 100 000, and while the average size of new dwellings elsewhere in the EU, with the sole exception of Italy, has increased, in England and Wales it has fallen. This might be at least partly accounted for by the fall in household sizes, but then, household sizes are falling across Europe.

There can be no certainty that these exceptional trends in the UK will continue, but it might be prudent to assume that they will. If the housing stock of the future is to match up to the Government's stated ambition in the *National planning policy framework* [4] to accommodate "...the housing needs of different groups in the community including disabled people, older people and families with children, ...[with]...high quality and inclusive design for all development, including individual buildings, public and private spaces and wider development schemes...", much greater attention will need to be paid to the design of internal layouts to ensure that they are robust to the changing needs of occupants over time.

Furthermore, the Communities and Local Government department website states that: "As well as providing support for older people today, there is also the challenge of making sure that the right type of housing and support is available for future generations of older people". [3)]

Generally, older people spend 70% to 90% of their time in their own home. Most older people want to remain in their own home, and a familiar environment is important in maintaining independence. Research also suggests that many older people affected by health conditions or disability find it difficult to move around their home and use the facilities in comfort and with dignity.

---

2) Data taken from *Housing statistics in the European Union* [5]. The report shows that over the past 30 years the UK population has grown by 9.5% – almost double the rate experienced in Germany, but less than half the rate seen in France and Spain, and only slightly less than half that seen in the Netherlands, already the most densely populated country in the EU with a population density almost double that of the UK. While data collected for the report show the dwelling size averaged over the entirety of the housing stock in England in 2001 to be 86.9 m^2, the average size of new dwellings over the period 1981 to 2001 was only 82.7 m^2. For all other member states for which figures exist, including the Netherlands and with the sole exception of Italy, the average size of new dwellings increased, in some cases by a considerable margin.

3) http://www.communities.gov.uk/housing/housingolderpeople [last accessed 25 July 2013].

Licensed copy: IP Login, University of Oxford, Version correct as of 04/05/2014

The requirements of a dwelling's occupants can change as a result of accident, illness or ageing, giving rise to reduced mobility or increasing sensory loss. In order to meet these changing requirements, homes need to be both accessible and adaptable: accessible for both visitors and residents, and adaptable to meet residents' changing needs, both temporary and longer term.

Some design features might need to be incorporated when the dwelling is first built; others might only need to have provision made at the outset for their future adaptation. Incorporation of these design features also makes the dwelling convenient for disabled visitors and most resident households, including some (but not all) wheelchair users, without the need to undertake expensive or disruptive alterations or substantial adaptations.

Anticipating some of these trends, the Joseph Rowntree Foundation supported work in the 1990s to develop the concept of lifetime homes, which aimed to incorporate the principles of accessibility and adaptability in good housing design. The current *Lifetime homes design guide* [1], developed by Habinteg Housing Association, reflects contemporary knowledge and expectations, and continues to be used by local authorities as they seek to meet the needs of their current and anticipated resident populations. However, it was felt that a new British Standard, building on the principles of the lifetime homes standards but expanded and more detailed, was required to serve the needs of industry and the professions, and to have a wider application in both the public and private sectors.

It is not expected that this British Standard will automatically apply to all new homes, but local authorities will need to make informed choices about the mix of housing types and tenures that will be required over the coming decades. Housing providers will need appropriate tools to ensure that strategic decisions can be put into effect. It is expected that this British Standard will play a significant role in helping them to achieve their aims.

Licensed copy: IP Login, University of Oxford, Version correct as of 04/05/2013

1 Scope

This British Standard gives recommendations for the design of accessible and adaptable general needs housing, whether in the form of flats or individual houses. It covers car parking, external access routes to blocks of flats or individual houses, common circulation areas in blocks of flats, circulation areas within dwellings, and the provision of key rooms and facilities.

This British Standard is intended to be used for new dwellings that are designed to be accessible and adaptable. The recommendations can also be used for assessing the accessibility and adaptability of existing dwellings and, where practicable, as a basis for their improvement. The extent to which the recommendations apply to renovations, refurbishments and conversions (including listed and historic buildings) is determined on a case-by-case basis.

This British Standard does not cover the design of public buildings, which are covered in BS 8300:2009+A1. It does not cover purpose-designed wheelchair housing, purpose-designed housing for older people such as “extra care”, “close care”, “assisted living” etc., or other types of housing which include assistance or care facilities.

This British Standard does not provide comprehensive advice on the external environment.

2 Normative references

The following documents, in whole or in part, are normatively referenced in this document and are indispensable for its application. For dated references, only the edition cited applies. For undated references, the latest edition of the referenced document (including any amendments) applies.

BS 5395-1, *Stairs – Part 1: Code of practice for the design of stairs with straight flights and winders*

BS 5900, *Powered homelifts with partially enclosed carriers and no liftway enclosures – Specification*

BS 6180, *Barriers in and about buildings – Code of practice*

BS 6440, *Powered vertical lifting platforms having non-enclosed or partially enclosed liftways intended for use by persons with impaired mobility – Specification*

BS 9991, *Fire safety in the design, management and use of residential buildings – Code of practice*

BS 9999, *Code of practice for fire safety in the design, management and use of buildings*

BS EN 81-1, *Safety rules for the construction and installation of lifts – Part 1: Electric lifts*

BS EN 81-2, *Safety rules for the construction and installation of lifts – Part 2: Hydraulic lifts*

BS EN 81-28, *Safety rules for the construction and installation of lifts – Part 28: Remote alarm on passenger and goods passenger lifts*

BS EN 81-40, *Safety rules for the construction and installation of lifts – Part 40: Special lifts for the transport of persons and goods – Stairlifts and inclined lifting platforms intended for persons with impaired mobility*

BS EN 81-41, *Safety rules for the construction and installation of lifts – Part 41: Special lifts for the transport of persons and goods – Vertical lifting platforms intended for use by persons with impaired mobility*

Licensed copy: IP Login, University of Oxford, Version correct as of 04/05/2010

BS EN 81-70, *Safety rules for the construction and installation of lifts – Part 70: Particular applications for passenger and goods passenger lifts – Accessibility to lifts for persons including persons with disability*

3 Terms and definitions

For the purposes of this British Standard, the following terms and definitions apply.

3.1 accessible and adaptable general needs housing
housing that is sufficiently flexible and convenient to meet the existing and changing requirements of most households, and in which the interior fabric rather than the structure can be easily adapted to accommodate aids and equipment

NOTE Such households might include older people, families with children, physically disabled people or those with sensory impairments. Aids and equipment might include stairlifts, hoists and grab rails that make it easier for older people and some disabled people to stay in their home when their access needs change.

3.2 designated accessible parking
standing place for a private car that is suitable for, and designated for use by, disabled persons holding an official parking badge (e.g. blue badge)

4 General principles of accessibility

*COMMENTARY ON CLAUSE **4***

The following principles about access to dwellings and communal areas within blocks of flats, and the arrangement of activity spaces within and around them, are intended to:

- *make visiting a dwelling as convenient as possible for all people;*
- *facilitate cost-effective adjustments to enable an occupant to live and sleep within easy (step-free) access from the dwelling entrance if unable to use the stairs for a period of time (e.g. after an operation);*
- *make it easier to adapt a dwelling to suit the needs of any occupants who have or acquire a more permanent disability and enable them to use all the facilities;*
- *make it easier for people to move around.*

4.1 Facilities requiring step-free access from the entrance

When a dwelling is first built, step-free access should be provided from its entrance to the following facilities:

a) an accessible WC (**12.1**) and washbasin (**12.2**), either in a separate accessible WC compartment or in an accessible bathroom (**12.3**);

b) a living/socializing space (**13.1**);

c) a temporary bed space (**13.4**) in a habitable room, if there is no step-free access to a bedroom;

d) an accessible shower or space, services and drainage provision for a future accessible shower (**12.4**).

*NOTE 1 This may be achieved by providing all of these facilities on the entrance level, or by installation at the outset of a a vertical lifting platform or a homelift (see **10.2.1**).*

Licensed copy: IP Login, University of Oxford, Version correct as of 04/05/2010

NOTE 2 Facilities a) and b) benefit the reception of visitors who are unable to use steps and stairs, while all the facilities are intended for use if a family member is temporarily unable to do so.

NOTE 3 Facilities b) and c) may be contained within a single room.

NOTE 4 Facility d) may be in an accessible WC compartment or in an accessible bathroom, or by an extension of an accessible WC compartment into a storage space, or off a circulation space by adaptation of a storage space.

4.2 Provision of an accessible or adaptable bathroom

When a dwelling is first built, the following bathroom facilities should be provided on the same storey as, and close (ideally adjacent) to, a main (double or twin) bedroom (see **13.3**):

a) an accessible bathroom (see **12.3**) on the entrance level, including the facilities in **4.1**a) and **4.1**d), where they are not provided elsewhere on the entrance level; or

b) a bathroom on an upper floor that can be readily adapted in the future (see **12.3**), to include the facilities in **4.1**a) where the facility in **4.1**d) is separately provided on the entrance level.

NOTE 1 Option a) applies to single storey dwellings, e.g. flats or bungalows. Option b) applies to dwellings of two or more storeys.

*NOTE 2 In option b), the step-free access in the future from the entrance level to the upper floor bathroom is assumed to be by the installation of a stairlift (see **10.2.1**).*

4.3 Manoeuvring within a dwelling

A manoeuvring circle of at least 1 500 mm diameter, or an ellipse of at least 1 700 mm × 1 400 mm, should be provided in dining and living areas, as well as in at least one bedroom, where such a manoeuvring space is needed between the bed and furniture. This space should be clear of any heat emitters.

NOTE 1 The dimensions given are those recommended in BS 8300:2009+A1 for a wheelchair user to turn, but this space is also expected to be sufficient for a variety of other users, e.g. a person using a walking aid or a parent with a pushchair.

NOTE 2 Small items of furniture (e.g. coffee tables and bedside tables) may overlap with manoeuvring spaces.

5 Car parking and setting-down points

*COMMENTARY ON CLAUSE **5***

The key issue for car parking, particularly when associated with blocks of flats where parking is not on individual plots, is flexibility. As people with different needs move in and out of a neighbourhood, it is important that the parking arrangements are sufficiently flexible to allow the provision to vary over time.

5.1 Individual houses with on-plot parking

For individual houses where there is car parking on the plot, a parking bay of at least 2.4 m × 4.8 m, hard surfaced and level, should be provided.

An additional space of at least 900 mm and preferably 1 200 mm wide should be available along one side of the bay to extend it if required, to allow convenient access in and out of the vehicle.

NOTE 1 Part of this additional space could comprise a hard-surfaced path, or soft landscaping which could be converted as required.

Licensed copy: IP Login, University of Oxford, Version correct as of 04/05/2013

An additional space of at least 900 mm and preferably 1 200 mm deep should be available at one end of the bay, to allow convenient access to the rear of the vehicle.

*NOTE 2 It is desirable to provide a charging point for electrically powered mobility scooters (see also **13.7**).*

5.2 Dwellings without on-plot parking

5.2.1 Provision of communal car parking

Where parking is provided, designated accessible parking bays (see **5.2.2**) for blocks of flats or individual houses without on-plot parking should be provided on the basis of at least one such bay in each parking location and/or lift core associated with that development, plus additional bays distributed across the available parking locations. The design should not preclude the possibility of some parking bays being increased in size to become accessible bays in the future.

NOTE 1 The provision of car parking bays in a residential scheme is determined by the local planning authority. Refer to the parking standards policy in the relevant local development plan (see Annex A for information on car park management).

*NOTE 2 It is desirable to provide a charging point for electrically powered mobility scooters (see also **13.7**).*

NOTE 3 In basement car parking areas, the constraints imposed by structural columns might preclude the provision of larger bays at a later date unless the flexibility of layout is considered within the initial design.

Where the parking location is a large basement served by a number of lift cores, at least one designated accessible parking bay should be located adjacent to each lift core.

NOTE 4 In this context, a parking location might be an enclosed car park (e.g. in a basement, undercroft or podium), an off-street parking court or an on-street bank of parking, whether in a parallel, angled or right-angled formation. Guidance on car parking design and location is given in Car parking – What works where *[6] and* Manual for streets *[7].*

Where some dwellings in a development are designated as "wheelchair housing", any specific parking provision for such dwellings should be in addition to the recommendations above.

*NOTE 5 A small proportion of wheelchair users have high-top conversion vehicles which can require a vertical clearance of at least 2.6 m from the carriageway. Further guidance on clearance heights is given in BS 8300:2009+A1, **4.3** and **4.4.3**. Guidance on barrier control systems, and the controls and vertical clearances of any vehicle height barriers, is given in BS 8300:2009+A1, **4.4.2** and **4.4.3**.*

*NOTE 6 For access routes from car parking spaces, see **6.3**.*

5.2.2 Designated accessible parking bays

Designated accessible parking bays should be at least 3.6 m wide × 6.6 m long for parallel on-street parking, and at least 3.6 m wide × 6.0 m long for enclosed car parks, off-street parking courts and angled or right-angled on-street parking facilities.

NOTE 1 Parallel, angled and right-angled parking refers to the configuration of the longer dimension of the bays relative to the kerb and direction of the carriageway.

NOTE 2 Markings for designated accessible parking bays are shown in the following figures in BS 8300:2009+A1:

- *on-street parking bays (see BS 8300:2009+A1, Figure 1);*
- *off-street parking bays (see BS 8300:2009+A1, Figure 3).*

Licensed copy: IP Login, University of Oxford, Version correct as of 04/05/2013

5.3 Setting-down points

A setting-down point should be provided on firm and level ground. The distance from the setting-down point to an individual house or the communal entrance of a block of flats should be as short as practicable but not more than 50 m, and the gradient of the route should conform to **6.1**.

*NOTE For further details about setting-down points, see BS 8300:2009+A1, **4.5**.*

6 External access routes

*COMMENTARY ON CLAUSE **6***

An accessible route is essential to a dwelling or communal entrance, from facilities such as car parking and setting-down points, and from the site boundary where there are existing pedestrian routes that might give access to the site. It is preferable for all routes to be accessible, including access routes to garden areas, play spaces and amenity spaces. Particular attention needs to be paid in gated developments to ensure that pedestrian access and egress is accessible to all users.

When designing an approach to a building, it is important to recognize that changes in level are difficult for many people to negotiate, including wheelchair users, people who need to use walking aids and individuals with impaired sight. It is important to reduce the risk of injury to people, particularly individuals with impaired sight, when approaching and passing around the perimeter of a building under all lighting conditions.

Residents with visual or memory impairment will be helped if there are permanently detectable and noticeably recognizable physical features to provide familiar waymarks when moving along access routes around their homes. Further guidance is given in the Thomas Pocklington Trust guide Housing for people with sight loss *[8].*

Guidance on dropped kerbs and tactile paving can be found in the DFT/DTLR publication Guidance on the use of tactile paving surfaces *[9].*

6.1 Access route gradients

Buildings should be located, and finished floor levels designed, to allow step-free access to the entrances of individual houses or blocks of flats from the street and from all parking spaces or setting-down points serving the dwellings.

Where this is not achievable, e.g. on steeply sloping sites, discussions with the local planning authority might be necessary to agree the optimum solution for each plot, which should ensure that step-free access to at least one entrance is available for both residents and visitors.

The access route, whether to individual houses or communal entrances to blocks of flats, should preferably be level or gently sloping. Where this is not achievable, ramped access, with a gradient as shallow as practicable, should be provided in accordance with **6.7**.

NOTE It is assumed that a gradient of 1:60 or less steep is level, steeper than 1:60 (but less steep than 1:20) is gently sloping, and 1:20 or steeper is a ramp.

6.2 Surface of access routes

Access route surfaces should consist of hard landscaping, should be firm, slip-resistant and reasonably smooth, and should contrast visually against adjacent surfaces. Cobbles and loose gravel should not be used.

NOTE Further detailed guidance is given in BS 8300:2009+A1.

Licensed copy: IP Login, University of Oxford, Version correct as of 04/05/2013

6.3 Access routes from car parking spaces

The distance between all parking spaces and building entrances should be as short as practicable, with the designated accessible parking spaces being the nearest. Designated accessible parking spaces should generally be within 50 m of a communal entrance or a lift core (see also **5.2.1**).

Pedestrian routes between all parking spaces and building entrances should be clearly designated. Where a pedestrian route crosses a vehicular route, appropriate tactile paving should be used.

NOTE Detailed guidance on the use and layout of tactile warning and information surfaces is given in the DFT/DTLR publication Guidance on the use of tactile paving surfaces *[9].*

Access routes from car parking spaces to all entrances should also conform to **6.4** to **6.10**.

6.4 Access routes to blocks of flats

NOTE 1 See also BS 8300:2009+A1, ***5.2*** *and* ***5.3****.*

The route to the principal entrance (or alternative accessible entrance) of a block of flats should be clearly identifiable, e.g. by design or signposting. Where there are multiple entrances to a block of flats, the entrances and routes to them should be distinguishable from each other, to assist wayfinding.

NOTE 2 Guidance on signposting is given in the Sign design guide *[10]. Guidance on wayfinding and orientation, including colour and tonal contrast, is given in* The colour, light and contrast manual *[11].*

Paths to communal entrances of blocks of flats from the boundary or any parking areas should usually be at least 1 800 mm wide.

NOTE 3 A width of 2 000 mm is preferable.

Where site restrictions dictate, and a narrower width can be justified (e.g. on the basis of low frequency of use), a width less than 1 800 mm is permitted, provided that passing places are made available at changes of direction and, in any situation, at a distance no greater than 25 m from the start of the path or from each other. In these circumstances the path should be not less than 1 200 mm wide. Passing places should be not less than 1 800 mm × 1 800 mm.

Gates across communal paths should have an effective clear width not less than 1 000 mm when fully open, hinges that self-close without a spring, and a light action latch no higher than 1 200 mm that is easily released from either side.

Any latches, locks or hinges should enable people with limited hand dexterity or strength to use the gate independently.

6.5 Access routes within individual house plots

Paths within individual house plots should be at least 900 mm wide along their entire length, when separate from the drive.

Any gate to an individual house plot should have an effective clear width not less than that shown in Table 1.

Any latches, locks or hinges should enable people with limited hand dexterity or strength to use the gate independently.

Licensed copy: IP Login, University of Oxford, Version correct as of 04/05/2016

Table 1 **Effective clear width of gates to individual house plots**

Direction and width of approach	Minimum effective clear width mm
Straight on (without a turn or oblique approach)	800
Footway at right angles to the gate at least 1 500 mm wide	800
Footway at right angles to the gate at least 1 200 mm wide	825
Footway at right angles to the gate less than 1 200 mm wide (minimum width 900 mm)	900

6.6 Hazards on access routes

No elements of landscaping or external works that could present a hazard, e.g. flower tubs and planters, litter bins and signposts, should be located within an access route.

Windows and doors should not swing across access routes, including stair or ramp landings, and thus create a hazard for blind and partially sighted pedestrians.

Any recess or setback zone, within which such windows or doors might project, should be protected by guarding, e.g. by a kerb or other barrier that can be detected by a person using a cane.

*NOTE Guidance on hazard protection within access routes is given in BS 8300:2009+A1, **5.7.2**.*

6.7 Ramped access routes

6.7.1 Ramped access routes to blocks of flats

No flight of a ramp should have a going greater than 10 m long or a rise greater than 500 mm.

The maximum gradient on an individual ramp flight should be 1:20 for a going of 10 m (a rise of 500 mm), 1:15 for a going of 5 m (a rise of 333 mm), and 1:12 for a going of up to 2 m (a rise of 166 mm), with gradients for intermediate goings interpolated between these values.

The going of a ramp flight in relation to its rise should be in accordance with Figure 1.

NOTE See Annex B for further guidance.

Top and bottom landings should always be provided. An intermediate landing should be provided where the total rise is greater than 500 mm and/or where there is a change of direction. All landings should be at least the width of the ramp and not less than 1 500 mm long, clear of the swing of doors and gates. If an intermediate landing is a quarter-turn or half-turn landing, the width of the ramp should be maintained throughout the turn or turns.

Handrails should be provided on both sides of a ramp, and should conform to **6.9**.

The surface width of a ramp, between walls or upstands, should be not less than 1 500 mm. Where the width between the handrails of a ramp exceeds 2 500 mm, the ramp should be divided into two or more channels, with a distance between handrails of not less than 1 000 mm and not more than 2 000 mm. If a number of channels are provided, at least one should have a surface width of 1 500 mm.

Licensed copy: IP Login, University of Oxford, Version correct as of 04/05/2013

A continuous upstand at least 100 mm high, or an equivalent barrier, should be provided at any open edge of a ramp, and it should contrast visually with the ramp surface.

Steps should be provided in addition to a ramp where the level change is 300 mm or greater (see **6.8.1**).

Figure 1 **Minimum ramp going in relation to the rise of the flight**

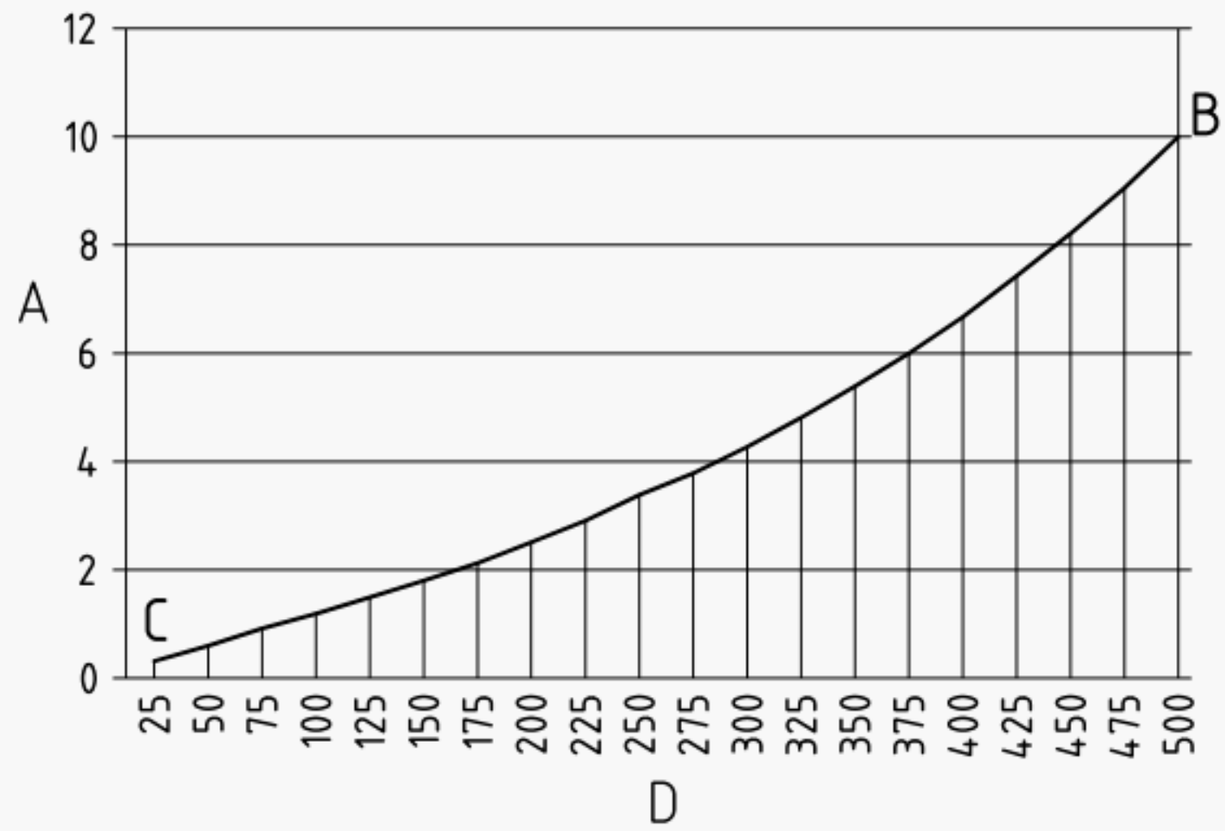

A Minimum going of ramp flight, in metres (m)

B Maximum gradient of 1:20 at 500 mm rise of a flight

C Maximum gradient of 1:12 for rises up to 166 mm

D Rise of ramp flight, in millimetres (mm)

6.7.2 Ramped access routes to individual houses

Ramp gradients to individual houses should be determined in accordance with the recommendations for ramped gradients to blocks of flats (**6.7.1**).

Ramps should have a surface width between walls and upstands of at least 1 000 mm throughout their length.

The external landing adjacent to the entrance to the house should conform to **7.3**.

Where intermediate landings are necessary on a ramped approach, they should have a length of at least 1 500 mm.

The ramp surface and its landings should be durable and easy to maintain, and should be slip-resistant when wet, to allow for rain and other environmental factors.

Open edges of a ramp should have a continuous upstand of at least 60 mm high.

6.8 Steps on access routes

6.8.1 Stepped access routes to individual houses

Steps on access routes to individual houses (which are in addition to the step-free access routes; see **6.3**) should have a going of 300 mm to 450 mm and a rise of between 150 mm and 180 mm.

NOTE 1 There is now compelling research evidence to indicate that a larger going helps to avoid accidents on a stair, particularly in descent, as it allows a person to place more of their foot on the step. Larger goings can also benefit people who wish to pause mid-flight to rest.

Licensed copy: IP Login, University of Oxford, Version correct as of 04/05/2016

The rise and going should be uniform within a flight, and between a series of flights.

There should be a handrail on both sides of each flight, conforming to **6.9**.

There should be no single steps.

The surface width of steps, between enclosing walls, strings, balustrades or upstands, to individual houses should be not less than 900 mm. Risers should not be open and their profile should ensure that people who drag their feet do not trip when ascending.

All step nosings should incorporate a permanently contrasting continuous material for the full width of the stair on both the tread and the riser. The material should contrast visually with the remainder of the tread and riser.

NOTE 2 A contrasting nosing at the junction between tread and riser might assist people with a visual impairment.

NOTE 3 For further information on the design of steps, and on visual contrast, refer to BS 8300:2009+A1.

A level landing should be provided at the top and bottom of each flight of steps. Its length, clear of any door or gate swing, should be not less than the surface width of the flight.

6.8.2 Stepped access routes to blocks of flats

Steps on access routes to blocks of flats should meet the recommendations for individual houses (**6.8.1**), except where different from those in this subclause.

If a level change of 300 mm or greater is required on an access route to a block of flats with a communal entrance, steps should be provided, in addition to a ramp.

The surface width of steps, between enclosing walls, strings, balustrades or upstands, should be not less than 1 200 mm, and the width between handrails should be not less than 1 000 mm. Where the width between handrails exceeds 2 000 mm, the stair should be divided into two or more channels with a distance between handrails of not less than 1 000 mm, or not more than 2 000 mm, to ensure that all users have access to a handrail.

All step nosings should incorporate a permanently contrasting continuous material for the full width of the stair on both the tread and the riser, to help people with a visual impairment appreciate the extent of the stair and identify individual treads. The material should be 50 mm to 65 mm wide on the tread and 30 mm to 55 mm on the riser, and should contrast visually with the remainder of the tread and riser.

The whole tread and the nosing should incorporate a slip-resistant material, starting as close as practicable to the front edge of the nosing and extending the full width and depth of the tread.

NOTE 1 A proprietary nosing can provide a durable solution that satisfies both visual contrast and slip resistance criteria (see BRE IP 15/03 [12]).

NOTE 2 Further information on slip resistance is given in BS 8300:2009+A1.

To give advance warning of a step, tactile paving with a "corduroy" hazard warning surface should be provided at the top and bottom of each flight. Where the approach to the stair is wider than the flight, the tactile surface should extend beyond the line of each edge of the flight (see Figure 2).

NOTE 3 A "corduroy" hazard warning surface has raised ribs to warn people with a visual impairment of a potential hazard ahead. Further information on hazard warning surfaces can be found in Guidance on the use of tactile paving surfaces *[9].*

Licensed copy: IP Login, University of Oxford, Version correct as of 04/05/2013

Figure 2 **The use of a "corduroy" hazard warning surface and handrails on an external stepped access to a block of flats**

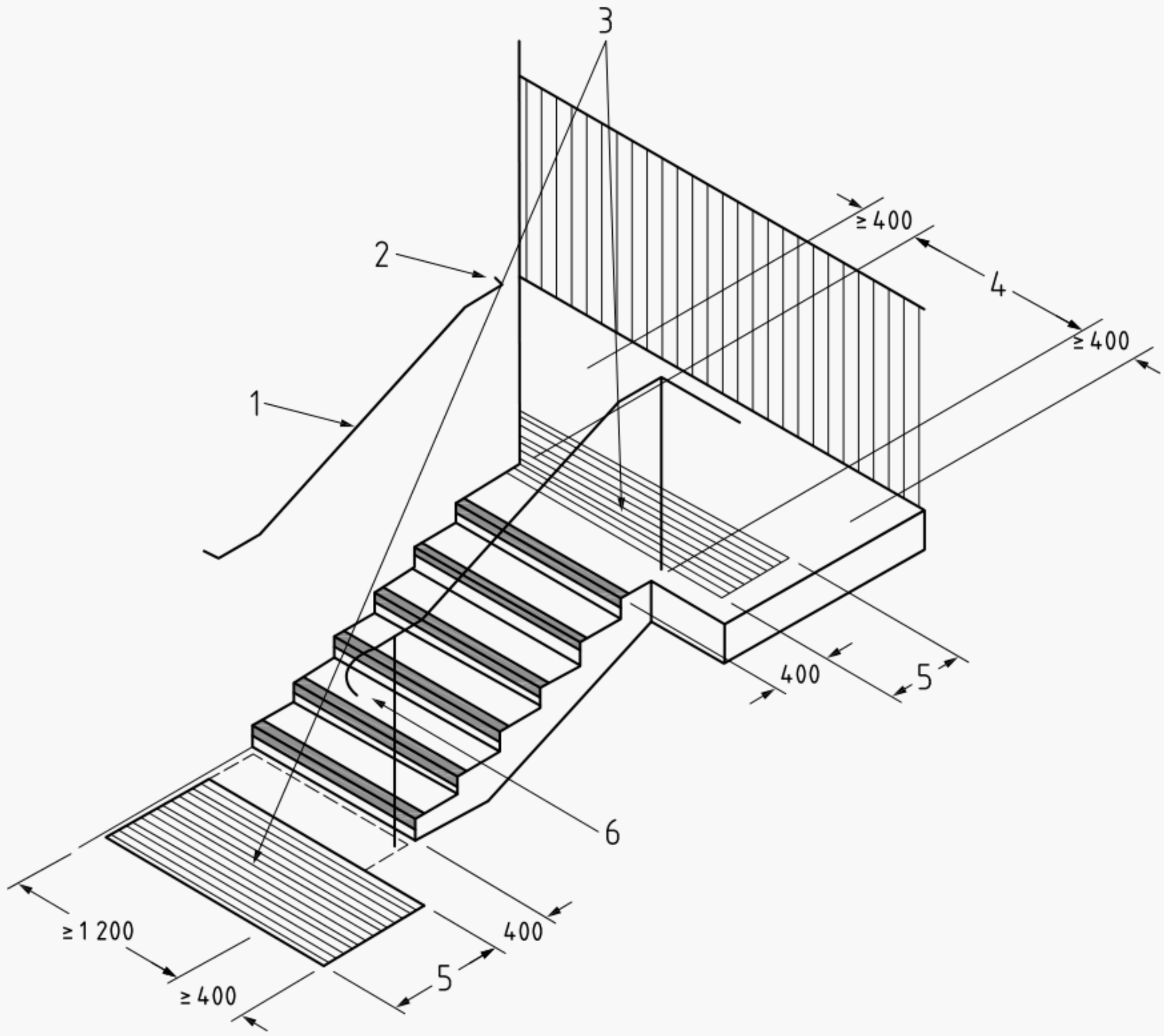

Key

1 Handrail (to be continuous across intermediate landings)

2 Closed end to handrail at top and bottom

3 "Corduroy" hazard warning surface at top and bottom, stopping 400 mm from the nosing. Warning surface extends at least 400 mm beyond the stair width when the approach is at an angle

4 Stair width

5 800 mm when the approach is straight on and 400 mm when the only approach to the stair is at an angle

6 Handrail to be terminated in a way that reduces the risk of clothing being caught

6.9 Handrails to ramps and steps

The vertical height to the top of a handrail should be 900 mm to 1 000 mm from the pitch line of a flight of steps or a ramp, and 900 mm to 1 100 mm from the surface of a landing. Where practicable, handrails should be continuous across intermediate landings.

Each handrail should extend at least 300 mm beyond the first and last nosing of a flight of steps or a ramp flight, with as much of the extension as possible being horizontal. The extension should not intrude into any circulation route and should terminate in a way that reduces the risk of clothing being caught.

Licensed copy: IP Login, University of Oxford, Version correct as of 04/05/2016

A handrail should contrast visually with the background against which it is seen, without being highly reflective. It should not be excessively cold to the touch when used externally in geographical areas subject to extremely harsh winter weather conditions.

NOTE Further information on the design and provision of handrails is given in BS 8300:2009+A1.

6.10 Lighting of access routes to blocks of flats

Access routes to blocks of flats, including any ramps or steps, should be well lit artificially, giving an illuminance at ground level of 50 lx on paths and 100 lx on ramps or steps.

NOTE Lighting levels are from the Thomas Pocklington Trust guide Housing for people with sight loss *[8].*

7 Entrances to individual houses or blocks of flats

*COMMENTARY ON CLAUSE **7***

The key issues for people when gaining access into a building are the ease with which they can find and operate locks or other control equipment, the ease with which they can open doors, the amount of manoeuvring or circulation space available, and how safe and comfortable they feel when doing so.

Good lighting, weather protection and the appropriate provision of easy-to-use locks and control systems can all help in facilitating quick and easy access into a building, and in enhancing feelings of safety, comfort and security.

7.1 External lighting to entrances

Sufficient external lighting, to an entrance door to an individual house or a block of flats, should be provided so that callers can be identified (e.g. through the entrance door, or by use of a video control system), and to enable a resident to operate locks and doors.

NOTE 1 In both cases, where lighting might not be on permanently, a sensor-activated light might be appropriate in providing security and aiding residents returning home.

Lighting should achieve an illuminance within the range of 100 lx to 200 lx on locks and access controls for use by residents and visitors.

All entrances should be lit with fully diffused luminaires to reduce glare.

NOTE 2 A good location for a luminaire is to the side or above a doorway where the door is flush to the doorway.

NOTE 3 Good lighting can also facilitate lip reading, either directly or on screen, by people with hearing difficulties.

7.2 Weather protection

An entrance door to an individual house or a block of flats should have effective weather protection for people unlocking or waiting at the door.

*NOTE Examples of effective weather protection include a canopy (where any supports are clear of the access route and external approach area, and positioned so that they do not create a hazard to users), a porch (see Note 2 to **7.3**), or a recess with clear sight lines and natural surveillance.*

Licensed copy: IP Login, University of Oxford, Version correct as of 04/05/2013

7.3 External approach area

A level external approach area should be provided at every entrance to an individual house or a block of flats, to ensure that a wheelchair remains stable when its user is reaching the door bell, unlocking the door or using access control/call systems. The approach area should have a crossfall no steeper than 1:50 to allow for effective drainage of standing water.

*NOTE 1 For a definition of "level", see Note to **6.1**.*

For both individual houses and blocks of flats, the external approach area (see Note 2) should be at least 1 500 mm × 1 500 mm. This should be clear of any door swings and other obstructions.

NOTE 2 Where there is an external enclosed porch with a door, and the entrance door to the dwelling is the second (internal) door within the porch, the external approach area is deemed to be outside the first (external) door to the porch.

7.4 Door entry and call systems

*COMMENTARY ON **7.4***

Access control devices need to be close enough to the door to allow people to move into a suitable position to use the device, and also to allow sufficient time for people to gain entrance after activation. Some access systems require the user to position themselves immediately in front of the access control device (e.g. a video system).

Guidance on reach ranges is given in BS 8300:2009+A1, Annex F.

Where entrances are provided with a door entry system (e.g. an entryphone) or a doorbell, the doorbell or external call and activation controls should be positioned on the latch side of the door opening, centred in a zone 1 000 mm to 1 200 mm above the floor.

NOTE 1 Entry systems have to be located such that they are usable both by people standing and by wheelchair users.

There should be a clear space of at least 300 mm beyond any door entry controls located on the wall adjacent to the entrance.

Call and activation controls should be illuminated and tactile, and should contrast visually with the background against which they are seen. Where appropriate, the means of indicating that the call is acknowledged and that the lock has been released should be both audible and visible.

NOTE 2 In noisy environments, an entry system with an inductive coupler would assist hearing aid users. An entry system with an inductive coupler and two-way integrated camera and video screen would assist hearing aid/cochlear implant users, sign language users and people without speech.

7.5 Door opening and locking hardware

Doors should be secured by a single-handed locking system, at a height of between 800 mm and 1 050 mm (900 mm is the optimum).

NOTE 1 Locking systems that require the use of both hands simultaneously can be a barrier to access.

NOTE 2 Guidance on suitable door opening and locking hardware is given in BS 8300:2009+A1.

Where a letter plate opening is within the door, there should be sufficient space for the door to be fully opened with a letter cage fitted.

NOTE 3 A letter cage fitted to a letter plate opening can assist with security as well as making it easier to pick up post. A low-level letter plate opening can cause difficulties for both delivery and collection.

Licensed copy: IP Login, University of Oxford, Version correct as of 04/05/2013

7.6 Entrance doors

7.6.1 Door operation

The principal entrance door to an individual dwelling or a block of flats, when required to be self-closing, should have an opening force, when measured at the leading edge of the door, of not more than 30 N from 0° (the door in the closed position) to 30° open, and not more than 22.5 N from 30° to 60° of the opening cycle.

NOTE Guidance on types of entrance doors is given in BS 8300:2009+A1.

7.6.2 Effective clear width of entrance doors

The effective clear width of all entrance doors to a dwelling, whether an individual house or a flat, should be at least 800 mm. If there is a double doorset, the minimum effective clear width should be achieved by a single leaf, whether hinged or sliding.

NOTE 1 Entrance doors include doors to balconies (except Juliet balconies), rooftop terraces, amenity spaces and all communal facilities (e.g. bin stores).

NOTE 2 An effective clear width of less than 800 mm might result in people with poor manoeuvring ability or with large wheelchairs not being able to pass through without damage to themselves or the door or frame.

The effective clear width of a communal entrance door to a block of flats, and associated lobby and communal hallway doors, whether a single leaf or the primary leaf of a double door, should be at least 1 000 mm.

NOTE 3 The effective clear width also applies to sliding doors.

NOTE 4 There are no restrictions on the width of the secondary leaf of an unequal double-leaf door.

The effective clear width of a doorway should be measured clear of any projections from the face of the door such as door furniture and weather boards (see Figure 3).

When specifying a door size, designers should take into account the extent to which the door might, or might not, be able to open beyond 90°, allowing for the projection of the door furniture or wall configuration.

NOTE 5 The extent to which the effective clear width is reduced by projecting door furniture is dependent on the opening angle of the door. It is an advantage in achieving the recommended effective clear width if the door can open beyond 90°.

NOTE 6 The type of backcheck on some door closing devices can make doors more difficult to open to 90° and beyond. Where required, a backcheck may be used which does not activate unless the door is pushed hard. Alternatively, a doorstop may be used.

7.6.3 Clear space at the leading edge of the door

On the pull side of the entrance door to an individual house or flat, or a block of flats, there should be a clear unobstructed space of at least 300 mm between the leading edge of the door and any return wall or other obstruction. In a situation where the door has to be recessed, the face of the door should not be recessed beyond the wall or other obstruction by more than 200 mm.

NOTE An example of door location and side clearance, including when recessed, is given in Figure 4.

Licensed copy: IP Login, University of Oxford, Version correct as of 04/05/2013

Figure 3 **Examples of effective clear width through a doorway**

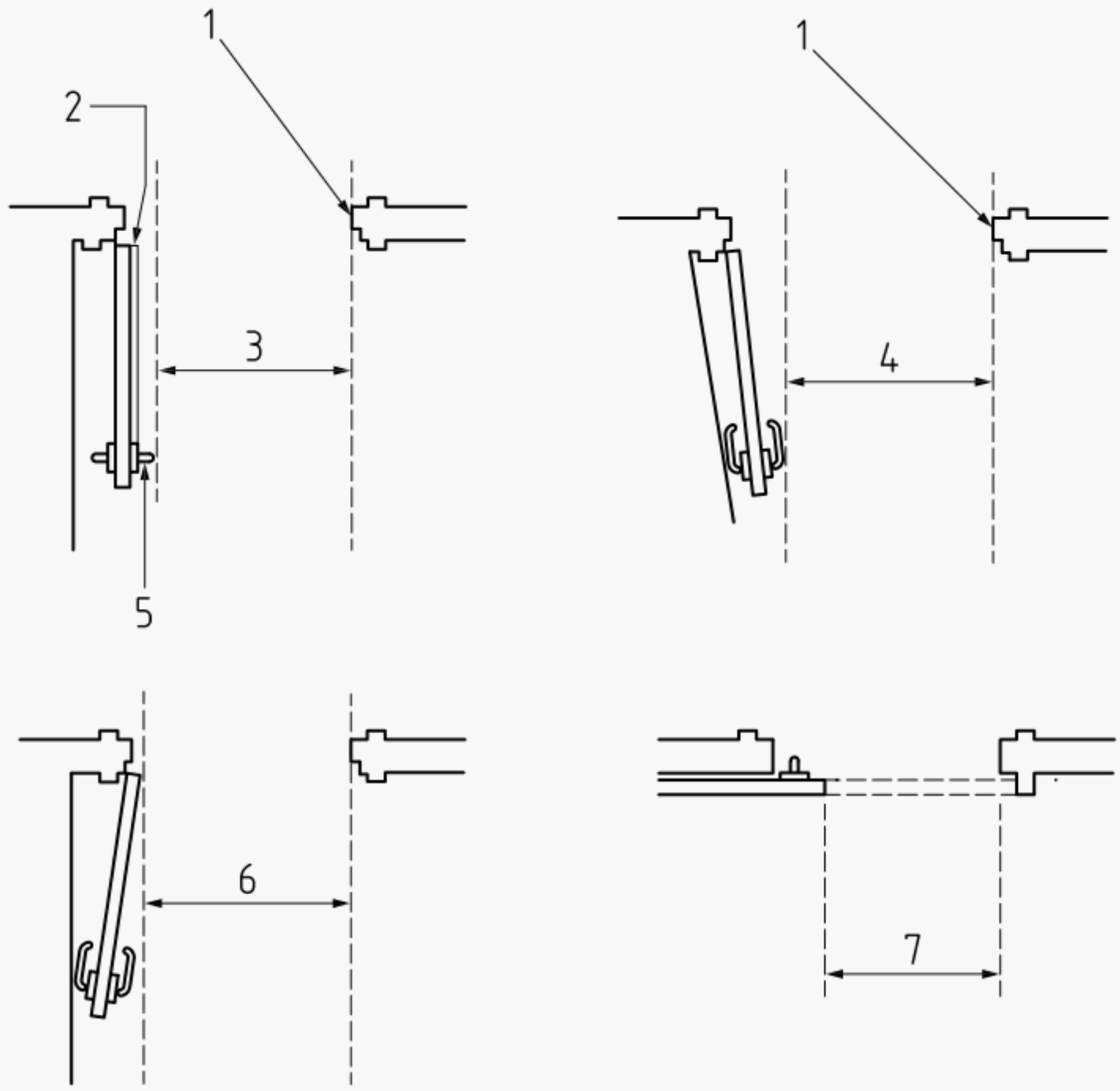

Key

1 Door stop or edge of other door of a double doorset

2 Weather board if provided

3 Effective clear width (door stop to projecting door furniture), with door open at 90°

4 Effective clear width (door stop to projecting door furniture), with door open less than 90°

5 Door furniture

6 Effective clear width (door stop to door leaf), with door open beyond 90°

7 Effective clear width (door stop to door leaf), with sliding door

Licensed copy: IP Login, University of Oxford, Version correct as of 04/05/2016

Figure 4 **Example of door location and side clearance on the pull side**

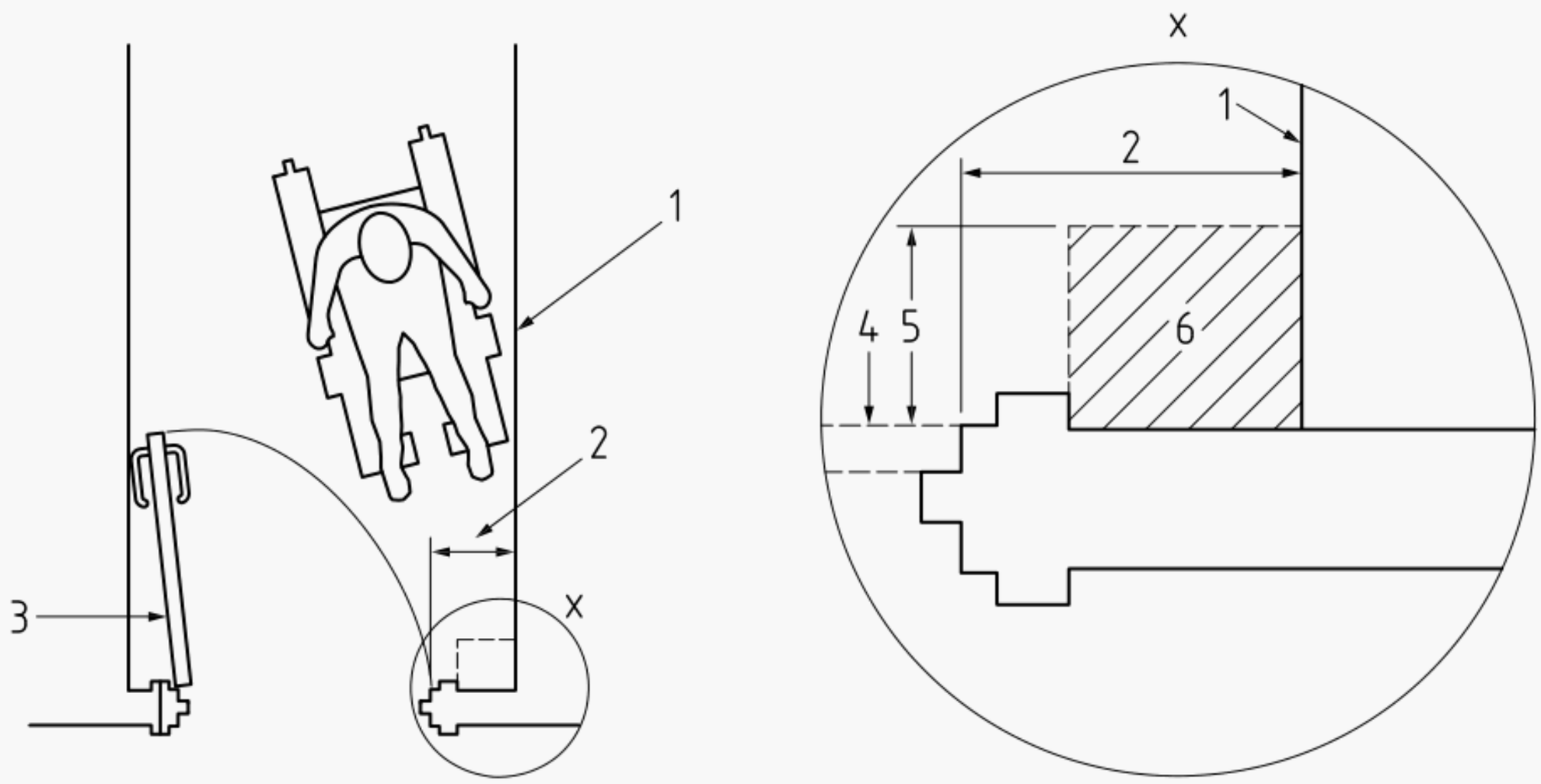

Key

1 Return wall, partition or other obstruction

2 Minimum 300 mm clear space between the line of the leading edge of the door (when closed) and the return wall (may be reduced if door is opened by remote automatic control)

3 Door hung from corner of room

4 Opening face of door

5 Maximum 200 mm

6 Zone within which a door reveal, column or other obstruction may be situated

7.7 Thresholds to external entrances

All external doors to an individual house or a block of flats should have a threshold that is either level or, if unavoidable, slightly raised in a way that still allows convenient and safe access for wheelchair users, and which avoids entrapment hazards for walking sticks and other mobility aids.

If raised, the threshold should be no higher than 15 mm and should have as few upstands and slopes as practicable; any upstand in excess of 5 mm in height should be chamfered.

NOTE 1 Upstands and gradients impede access. Small variations from any point taken as level can make a threshold inaccessible and potentially dangerous. Wheelchair users also find sharp upstands difficult to manage. Care needs to be taken when fitting replacement doors to maintain accessible thresholds.

NOTE 2 Examples of acceptable thresholds are given in Accessible thresholds in new housing – Guidance for house builders and developers *[13].*

7.8 Entrance matting in blocks of flats

A communal entrance lobby of a block of flats should have an entrance flooring system to help collect water and debris from the soles of shoes, etc.

Licensed copy: IP Login, University of Oxford, Version correct as of 04/05/2016

To minimize the risk of slips, trips and falls, any matting should either have its surface level with the adjacent floor finish or, if surface laid, be of a type that has a slip-resistant backing and chamfered edges.

NOTE Guidance on the selection, planning, installation and maintenance of entrance flooring systems is given in BS 7953.

8 Communal areas within blocks of flats

8.1 Identification of access routes to individual flats

The route to the entrance of an individual flat should be clearly identified.

NOTE 1 Guidance on signposting is given in the Sign design guide *[10].*

NOTE 2 Acoustics, lighting, colour and contrast within communal areas can assist people with auditory, visual, neurological and cognitive impairments, if used appropriately. Guidance on wayfinding and orientation, including colour and tonal contrast, is given in The colour, light and contrast manual *[11].*

8.2 Design of common steps and stairs

The design of common steps and stairs should conform to **6.8.2**, except that "corduroy" hazard warning surfaces are not required.

8.3 Handrails

Handrails within the communal areas of blocks of flats should conform to **6.9**.

8.4 Lighting

The communal areas of a block of flats should receive natural daylight wherever possible, and should also be artificially lit, with corridors being capable of being lit to different degrees of illuminance according to natural light levels and the time of day.

NOTE 1 The SLL Lighting handbook *[14] recommends that corridors are lit to an illuminance of 100 lx in daytime, and states that this can be reduced to 50 lx after dark. (See* SLL Lighting handbook, *section 15.4.2.)*

Common stairs should be artificially lit to achieve an illuminance on the treads and landings of 100 lx, with the top and bottom step clearly lit.

NOTE 2 The SLL Lighting handbook *[14] also recommends that there is a flow of light from the top to the bottom of the stair so that the treads are illuminated, but the risers are in shadow.*

The lighting may be controlled by manually operated time switches, photoelectric control or movement sensors. Where manually operated time switches or movement sensors are used, the time delay should be sufficient to allow people to pass through the controlled area before the light is extinguished.

8.5 Visual contrast between surfaces or building elements

The presence of doors, whether open or closed, should be apparent to people with impaired sight through the careful choice of colour and surface finish to create a visual contrast between the door and its surroundings. For example, when a door is open, people with impaired sight should be able to identify the door opening within the wall, as well as the leading edge of the door.

Mirrored, high gloss or very shiny surface finishes should be avoided for large areas, e.g. floor, wall, door and ceiling surfaces.

Licensed copy: IP Login, University of Oxford, Version correct as of 04/05/2013

Differences in light reflectance value (LRV) should be used to assess the degree of visual contrast between surfaces such as floors, walls, doors and ceilings, and between key fittings/fixtures and surrounding surfaces.

NOTE Relevant LRV differentials and methods of LRV measurement are provided in BS 8300:2009+A1, Annex B.

8.6 Thresholds to entrance doors to individual flats

Thresholds to entrance doors to individual flats from internal communal areas should conform to **7.7**, taking into account the different flooring materials used on either side of the threshold.

8.7 Corridor widths

Movement in common corridors and through doorways should be convenient to the widest range of people, including residents and visitors using mobility aids or wheelchairs.

Corridors within the communal areas of blocks of flats should be at least 1 200 mm wide.

A clear level space of at least 1 500 mm × 1 500 mm should be available in front of each individual flat entrance door.

8.8 Means of escape from flats

Means of escape for people in the event of fire should be designed in accordance with BS 9999 or BS 9991, as appropriate.

9 Circulation areas within a dwelling

9.1 Entrance hall within a dwelling

The design of the entrance hall of a dwelling, whether within an individual house or a flat, and of the doors from it, should be in accordance with **7.6**, **9.3**, **9.4** and **9.5**.

9.2 Stairs

The rise of each step should be between 150 mm and 200 mm, and the going of each step should be between 250 mm and 320 mm.

NOTE 1 This equates to a maximum pitch of just over 38°.

The rise and going should be consistent throughout an individual house or a flat.

Open risers should not be used.

Where winders are used, they should be designed in accordance with BS 5395-1.

A continuous handrail should be provided to at least one side of the stair flight, at a height between 900 mm and 1 000 mm from the pitch line of the stair flight. The handrail should have a profile that is easy and comfortable to grip.

The clear width of the stair, measured at a height of 450 mm above the pitch line, should be at least 900 mm.

NOTE 2 Newel posts can be disregarded for the purposes of this measurement.

NOTE 3 This does not preclude the addition of a second handrail on the opposite side at a later date.

There should be a landing at the top and bottom of each flight. The landing should extend beyond the first or last riser by at least 900 mm, and should have a width not less than that of the stair.

Licensed copy: IP Login, University of Oxford, Version correct as of 04/05/2016

Stairs should be artificially lit to achieve an illuminance on the treads and landings of 100 lx, with the top and bottom step clearly lit. Luminaires should be located where they are accessible for maintenance.

9.3 Dimensions of internal circulation spaces

Internal circulation spaces (e.g. lobbies and hallways) should be not less than 900 mm wide × 900 mm deep, clear of door swings and other obstructions (e.g. radiators).

There should be a space of not less than 900 mm deep clear of the front door swing (including in open-plan layouts where there is no lobby or hallway).

The effective clear width of internal doors, in relation to the width of the hallway, should conform to **9.4**.

NOTE The dimensions of lobbies and hallways and the doors from them are directly related.

9.4 Effective clear width of internal doors

All internal doors within an individual house or flat should have an effective clear width not less than that shown in Table 2 and Figure 3.

NOTE A greater effective clear width is achievable if the door can open beyond 90°.

Table 2 **Effective clear width of internal dwelling doors**

Direction and width of approach	**Minimum effective clear width** mm
Straight on (without a turn or oblique approach)	750
At right angles to a hallway/landing at least 1 200 mm wide	750
At right angles to a corridor/landing at least 1 050 mm wide	775
At right angles to a corridor/landing less than 1 050 mm wide (minimum width 900 mm)	900

9.5 Clear space at the leading edge of doors

For all rooms within an individual house or flat, a clear unobstructed space of at least 300 mm should be provided between the leading edge of a door (on the pull side) and any return wall or other obstruction, such as sanitary fittings or fitted wardrobes.

9.6 Thresholds to internal doors

Raised thresholds to internal doors should usually be avoided. Where a height change between two different flooring surfaces is unavoidable, this should be not greater than 10 mm. Where a threshold is unavoidable, it should be no higher than 5 mm above the higher of the two adjacent finished flooring surfaces. All edges should be chamfered.

9.7 Means of escape from dwellings

Means of escape for people in the event of fire should be designed in accordance with BS 9991.

Licensed copy: IP Login, University of Oxford, Version correct as of 04/05/2016

10 Vertical transportation within blocks of flats or individual houses

10.1 Vertical transportation in blocks of flats

*COMMENTARY ON **10.1***

The key issue is how to make reasonable vertical transportation provision for residents and visitors who might have small children, or be pregnant, elderly or disabled, and for service providers, to travel to the upper floors of blocks of flats.

10.1.1 Provision of lifts

In blocks of flats with two floors in addition to the entrance level (i.e. three storeys), at least one passenger lift (see **10.1.4**) or one enclosed vertical lifting platform (see **10.1.5**) should be installed at the outset at each service core. This includes floors with car parking and/or other communal facilities.

Blocks of flats with three or more floors in addition to the entrance level (i.e. four or more storeys) should be served by at least one passenger lift (see **10.1.4**) at each service core, installed at the outset. This includes floors with car parking and/or other communal facilities.

NOTE 1 Guidelines on the selection, installation and location of new lifts are given in BS 5655-6.

NOTE 2 The provision of more than one lift would address the need for residents and other people to be able to gain access in the event of a breakdown or during routine maintenance.

NOTE 3 Guidance on the use of lifts for means of escape is given in BS 9999 and BS 9991.

10.1.2 Manoeuvring space

A manoeuvring space of at least 1 500 mm × 1 500 mm should be provided on landings in front of lift entrances in the communal areas of blocks of flats. The floor covering of the manoeuvring space should contrast visually with the surrounding floor.

10.1.3 Lift signposting and identification

Signs indicating the location of a lift in a block of flats should be clearly visible from the building entrance. A sign identifying the floor reached should be provided on each landing in a location that can be easily seen from the lift. Signs should be designed such that they contrast visually with their surroundings.

The face plate of the lift call buttons and controls should contrast visually with the surface on which it is mounted.

10.1.4 Passenger lifts

Passenger lifts should conform to BS EN 81-1 or BS EN 81-2, and to BS EN 81-70.

NOTE 1 BS EN 81-70 includes requirements for audible, visual and tactile identification of lift controls, including guidance on colour contrast.

The internal dimensions of a passenger lift should be at least 1 400 mm deep × 1 100 mm wide, with a rated load of 630 kg.

NOTE 2 A larger lift size (2 000 mm × 1 400 mm, rated load 1 275 kg) would more conveniently accommodate and provide additional manoeuvrability for devices such as leg rest wheelchairs, mobility scooters, or bicycles which residents might wish to take into their own homes.

Licensed copy: IP Login, University of Oxford, Version correct as of 04/05/2013

Passenger lifts should be fitted with an emergency communication system to meet the requirements of BS EN 81-28.

NOTE 3 Further guidance on the provision of vertical transportation for disabled people is given in BS 8300:2009+A1.

10.1.5 Vertical lifting platforms

Vertical lifting platforms with fully enclosed liftways should conform to BS EN 81-41.

The doors of an enclosed vertical lifting platform should be distinguished visually from the surroundings, and any areas of glass should be clearly identified.

10.2 Vertical transportation in dwellings of two or more storeys

10.2.1 Provision of vertical transportation

In dwellings of two or more storeys, where any of the facilities a) to d) as identified in **4.1** are not on the entrance level, step-free vertical transportation should be installed when the dwelling is first built between the entrance floor and any floor(s) containing those facilities.

*NOTE This can be by installation at the outset of a vertical lifting platform (**10.2.2**) or a homelift (**10.2.3**). An enclosed vertical lifting platform would be appropriate for a three-storey town house where the entrance level is not that of the principal living level. A homelift can serve only two storeys.*

All dwellings should have provision for a stairlift (**10.2.4**) from the entrance level to the level with the adaptable bathroom (**12.3**) and the associated main bedroom (**13.3**), if these are not on the entrance level.

A manoeuvring space of at least 1 200 mm depth, clear of any door swing (including any door to the lift or lifting platform), should be provided on landings in front of any homelift or vertical lifting platform.

10.2.2 Vertical lifting platforms

Where an enclosed vertical lifting platform is installed, it should conform to **10.1.5**.

Where a vertical lifting platform with a non-enclosed or partially enclosed liftway is installed, it should conform to BS 6440.

NOTE Vertical lifting platforms conforming to BS 6440 are limited to a 3 m travel, but the travel can be longer subject to Notified Body approval.

10.2.3 Homelifts

Where a homelift is installed, it should conform to BS 5900.

*NOTE 1 A homelift often provides access between a room on the ground floor and a double bedroom on the upper floor of a two-storey dwelling. The bedroom might have the potential for direct access to a bathroom. However, a homelift may be located in any circulation space, dining room, walk-in storage cupboard or utility room, where a vertical liftway could be accommodated. See also **13.3**.*

NOTE 2 Where a homelift is located in the corner of a room, it may, if desired, be set back from the window wall by at least 150 mm to accommodate curtains, etc.

10.2.4 Stairlifts

Where a stairlift is installed, it should be a chair stairlift conforming to BS EN 81-40.

The chair should be capable of being parked in a position that does not cause an undue obstruction to the stair or to circulation spaces at the top and bottom.

Licensed copy: IP Login, University of Oxford, Version correct as of 04/05/2013

If provision is made for the future installation of a stairlift, the building elements where the stairlift is to be installed should have sufficient load-bearing capacity to accept the fixings and support the required loads.

NOTE Guidance on suitable structural and space provision can be obtained from manufacturers.

11 Services

11.1 Location of outlets, switches and controls

The heights above floor level to the centre of outlets, switches, controls and meters should be as shown in Figure 5, except where shown otherwise in Table 3.

Figure 5 **Heights to the centre of outlets, switches, controls and meters**

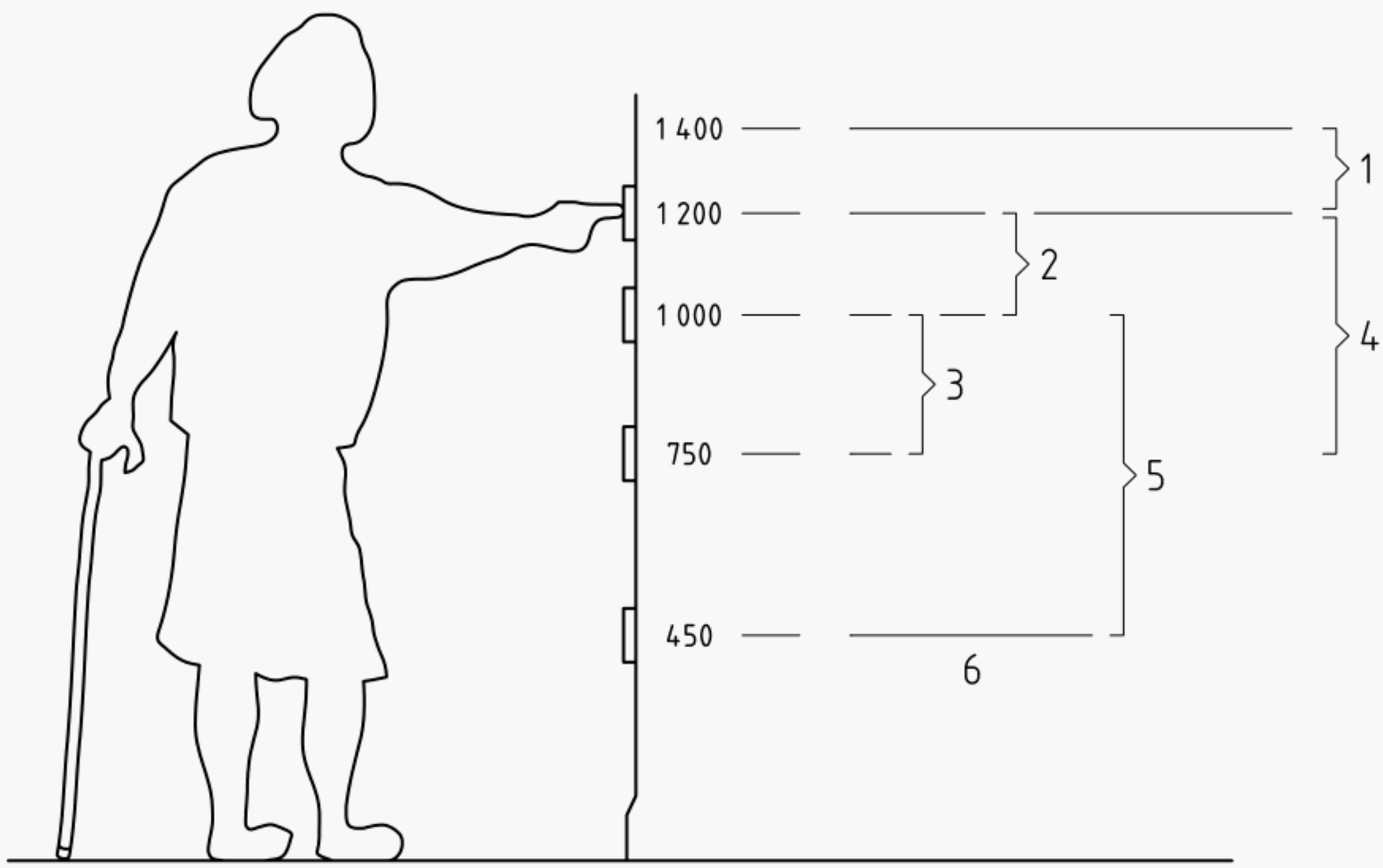

Key

1 Range for electrical consumer units and meters

2 Range for light switches

3 Range for switches and controls needing precise hand movement (e.g. for ventilation, heating and hot water installations)

4 Range for switches controlling permanently wired appliances (e.g. fused spurs or alarm call reset switches)

5 Range for socket outlets, telephone points and TV sockets

6 Lower limit for controls and thermostatic radiator valves

Licensed copy: IP Login, University of Oxford, Version correct as of 04/05/2013

11.2 Electrical and wired services

NOTE Attention is drawn to the requirements of BS 7671.

11.2.1 Horizontal location of outlets

Wall-mounted socket outlets, telephone points and TV sockets should be located not less than 350 mm from a corner of a room.

11.2.2 Outlets for future power and lighting installations

Capped-off electrical outlets or fused spurs, e.g. for future stairlifts and powered door/window controls, or junction boxes for lighting luminaires, should be provided for dwellings in accordance with Table 3.

NOTE Generous provision of socket outlets and extra lighting points will allow for greater flexibility in use and will enable future adaptations to be carried out more easily. Guidance on suitable lighting positions for people with a visual impairment is given in the Thomas Pocklington Trust guide Housing for people with sight loss *[8].*

Table 3 **Location and position of outlets for future power and lighting installations in dwellings**

Location of capped-off electrics/fused spur	Recommended position	Power supply to enable
Adjacent to leading edge of entrance door internally	At door entry control height (see **7.4**)	Door entry and control systems
Stairwell (within dwellings)	At bottom of stairs	Stairlift
Entrance-level WC/shower space	High level over floor drain	Electric shower
Inaccessible windows (e.g. those behind fixtures and fittings in kitchens and bathrooms) where no other accessible window in the room is available	To one side of window at sill height	Automatic window opener
Kitchen	On wall beneath wall cupboards	Task lighting under wall cupboards and over sink, wall sockets around worktops, and onto at least one food preparation area

11.2.3 Location and operation of light switches

Light switches should be mounted at a consistent height from room to room throughout the dwelling.

Lighting for stairs should be capable of being switched from both the top and the bottom of the stairs.

Lights in communal areas should be activated either automatically, or by a manual switch with automatic time-delayed cut-off requiring minimal force to operate.

11.2.4 Location of consumer units and meters

Consumer units and meters within the dwelling should be mounted at the height shown in Figure 5, so that the readings can be viewed and the switches operated by a person standing or sitting.

Meters located in communal areas, where the meters need to be read by resident consumers, should ideally be mounted 1 200 mm to 1 400 mm from the floor.

Licensed copy: IP Login, University of Oxford, Version correct as of 04/05/2016

11.2.5 Visual identification of switches, outlets and controls

Switches, outlets and controls situated in the communal areas of blocks of flats, and intended for use by visitors and residents, should contrast visually with their surroundings.

*NOTE See also **8.4**.*

11.3 Mains services

The means of turning mains water, gas and electricity on and off should be readily accessible and capable of being easily operated, using minimal force.

NOTE Stop valve devices that operate automatically and/or by push-button are available.

12 WC and bathroom facilities

*COMMENTARY ON CLAUSE **12***

*Following the recommendations in this clause will enable suitable sanitary facilities for visitors and householders who are temporarily incapacitated, and make provision for adapting a bathroom to suit a household's changing needs. For guidance on when these facilities are required, see also Clause **4**.*

12.1 Accessible WC

An accessible WC should be designed so that:

a) the centre line of the WC pan is 400 mm to 500 mm from the adjacent wall (see Figure 6);

b) there is a clear approach and transfer zone extending at least 350 mm from the WC's centre-line towards the adjacent side wall, and at least 1 000 mm from the WC's centre line on the other side. This clear zone should extend forward from the front rim of the WC by at least 1 100 mm, and back from the front rim by at least 500 mm. The bowl of a washbasin, located on the adjacent side wall or adjacent to the WC cistern, may project into this clear zone by up to 200 mm. Where the WC is located on the entrance level of the dwelling, this zone should also be clear of the room's door swing(s). In other locations, there should be a space at least 1 100 mm × 700 mm clear of any door swing or obstruction to enable a wheelchair user to enter the room and close the door behind them;

c) the cistern flush can be operated with minimal force by either a lever handle or a push button. These should be sited either on the open or transfer side of the space, or centrally. The flush control should be at a height of between 800 mm and 1 000 mm from the floor.

NOTE 1 Where push button flush controls are provided, it is preferable that they are large.

NOTE 2 Where the room containing the accessible WC is at the entrance level, outward-opening doors might provide a space-efficient solution. Pivot doors swinging in both directions and reduced-swing doors can also facilitate internal manoeuvring in WCs and bathrooms.

*NOTE 3 If the sole accessible WC is in an en-suite bathroom, this could compromise visitability (see Clause **4**).*

*NOTE 4 All dimensions in **12.1** to **12.4** are clear of low level obstructions, such as radiators and washbasin pedestals.*

Licensed copy: IP Login, University of Oxford, Version correct as of 04/05/2014

Examples of how the recommendations in **12.1** and **12.2** could be applied in a WC compartment, with provision for an accessible shower, are shown in Figure 6 for a level-access shower and Figure 7 for a low-level shower.

NOTE 5 A low-level shower tray is between 35 mm and 40 mm thick, with the waste able to be pumped from the top.

NOTE 6 It might be an advantage in the WC compartment to create a sloping floor and install a floor drain from the outset to avoid the need to seal an unused drain and to avoid disruptive alterations to the floor in the future. Where it is not practicable to install a floor drain, space needs to be allowed outside the WC and washbasin manoeuvring space for a future low-level shower with pumped drainage; see Figure 7. For a single storey dwelling, it might be more space-efficient to include provision for a low-level shower in the bathroom, rather than in the WC compartment.

NOTE 7 A WC compartment of 1 500 mm wide × 2 100 mm deep can satisfy the recommendations above while offering increased flexibility and choice of fixtures and fittings.

12.2 Accessible washbasin

An accessible washbasin should:

a) be suitable for face washing and shaving (i.e. not a hand-rinse basin); and

b) have a front approach zone at least 700 mm wide, centred on the washbasin and extending back from the front rim of the washbasin by at least 1 100 mm.

12.3 Accessible or adaptable bathroom

An accessible bathroom should contain an accessible WC (**12.1**), an accessible washbasin (**12.2**), and either a bath or an accessible shower (**12.4**). If a bath rather than an accessible shower is provided from the outset, provision should also be made for a future accessible shower (**12.4**), which might involve removal of the bath. An example of how these recommendations can be provided is demonstrated in Figure 8.

NOTE 1 An accessible shower may be installed at the outset, if preferred.

NOTE 2 A bathroom of 2 100 mm × 2 100 mm can satisfy the recommendations above while offering increased flexibility and choice of fixtures and fittings.

An adaptable bathroom on a level other than the entrance level should have adequate size and services layout so it can contain, by minor adaptation (i.e. without removal or alteration of existing walls), an accessible WC (**12.1**), an accessible washbasin (**12.2**), and an accessible bath or shower (**12.4**). The bathroom should be of adequate size to enable a manoeuvring circle of 1 500 mm diameter or a manoeuvring ellipse of 1 400 mm × 1 700 mm upon removal of the bath.

NOTE 3 Whilst households might not require a turning circle or ellipse in the future, ensuring this is achievable within an adaptable bathroom (upon removal of the bath) will ensure that a range of future showering and bathing options is possible according to household needs.

Licensed copy: IP Login, University of Oxford, Version correct as of 04/05/2016

Figure 6 **Example of an entrance-level accessible WC compartment with provision for a future level-access shower**

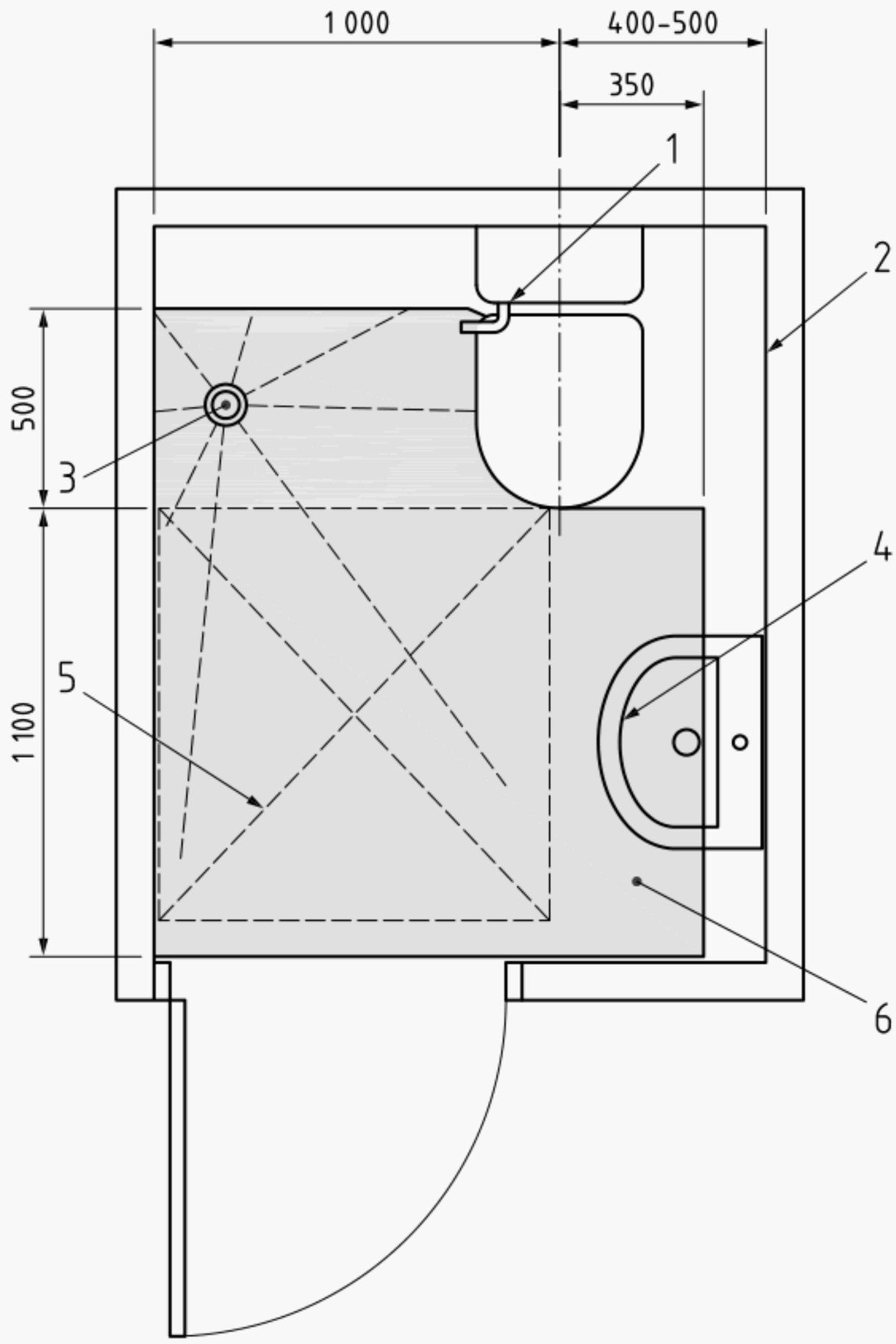

Key

1 Flush control located on the open or transfer side of the space [see **12.1**c)]

2 Adjacent wall

3 Floor drain with slight falls in floor (see **12.4**)

4 Washbasin may project into WC approach and transfer zone by max. 200 mm [see **12.1**b)]

5 Possible location of future level-access shower

6 WC approach and transfer zone clear of obstructions and door swings

NOTE 1 The WC approach and transfer zone incorporates the approach zone for the washbasin. There is no saving in space by removing the provision for the level-access shower, as the space is required for manoeuvring.

NOTE 2 The position of a floor gulley/future gulley may be within, or remote from, the 1 000 mm × 1 000 mm showering area as long as there is, or there is potential for, efficient drainage of the showering area.

Licensed copy: IP Login, University of Oxford, Version correct as of 04/05/2016

Figure 7 **Example of an accessible WC compartment with provision for a future low-level shower**

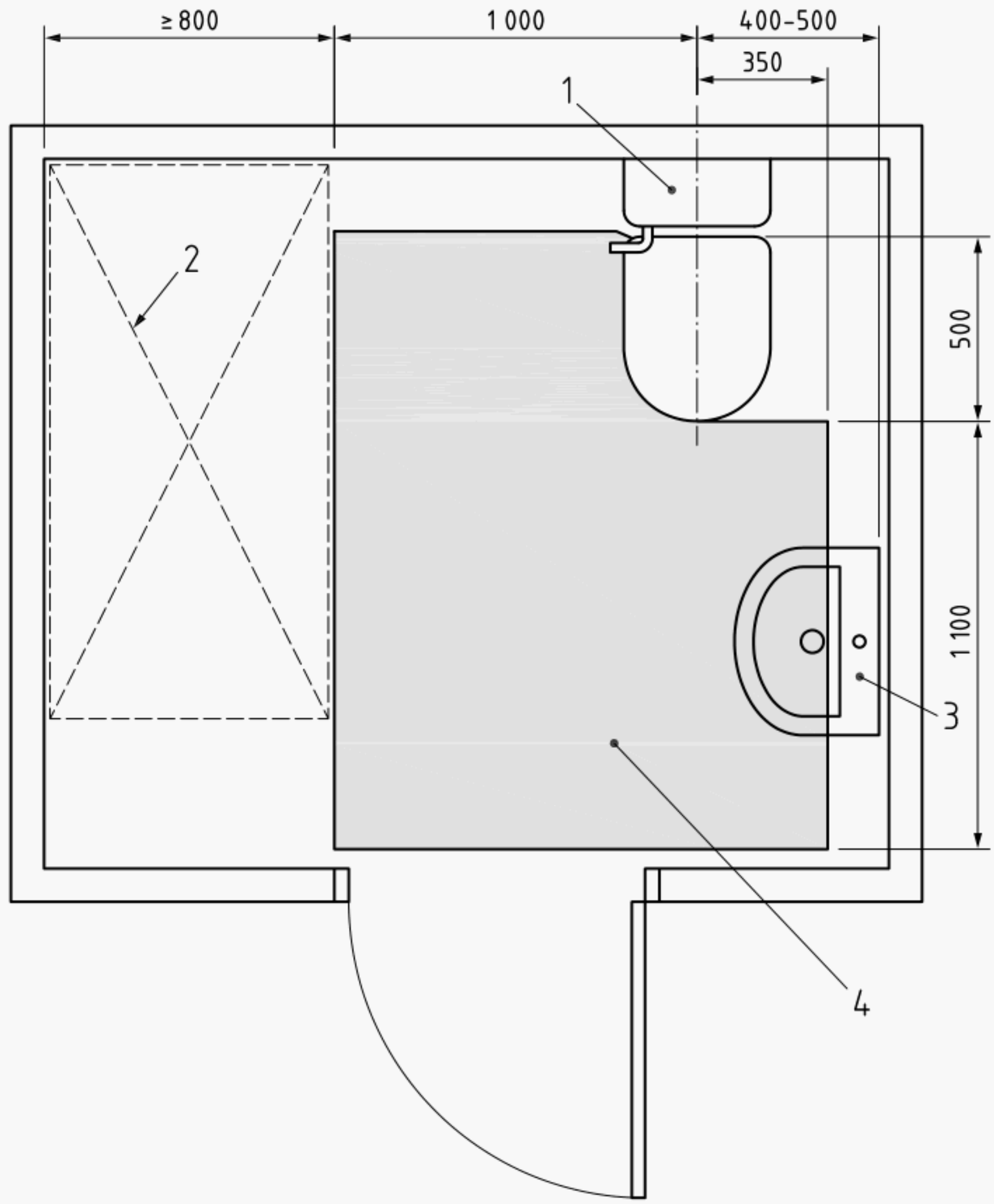

Key

1 Flush control located on the open or transfer side of the space [see **12.1**c)]

2 Space allowance for a rectangular low-level shower tray with a minimum area of 1 m² for use with pumped drainage (see **12.1**, Note 5 and Note 6)

3 Washbasin may project into the WC approach and transfer zone by max. 200 mm [see **12.1**b)]

4 WC approach and transfer zone, incorporating the approach zone for the washbasin clear of the showering space

Licensed copy: IP Login, University of Oxford, Version correct as of 04/05/2016

Figure 8 **Example of an accessible bathroom with provision for a future level-access shower**

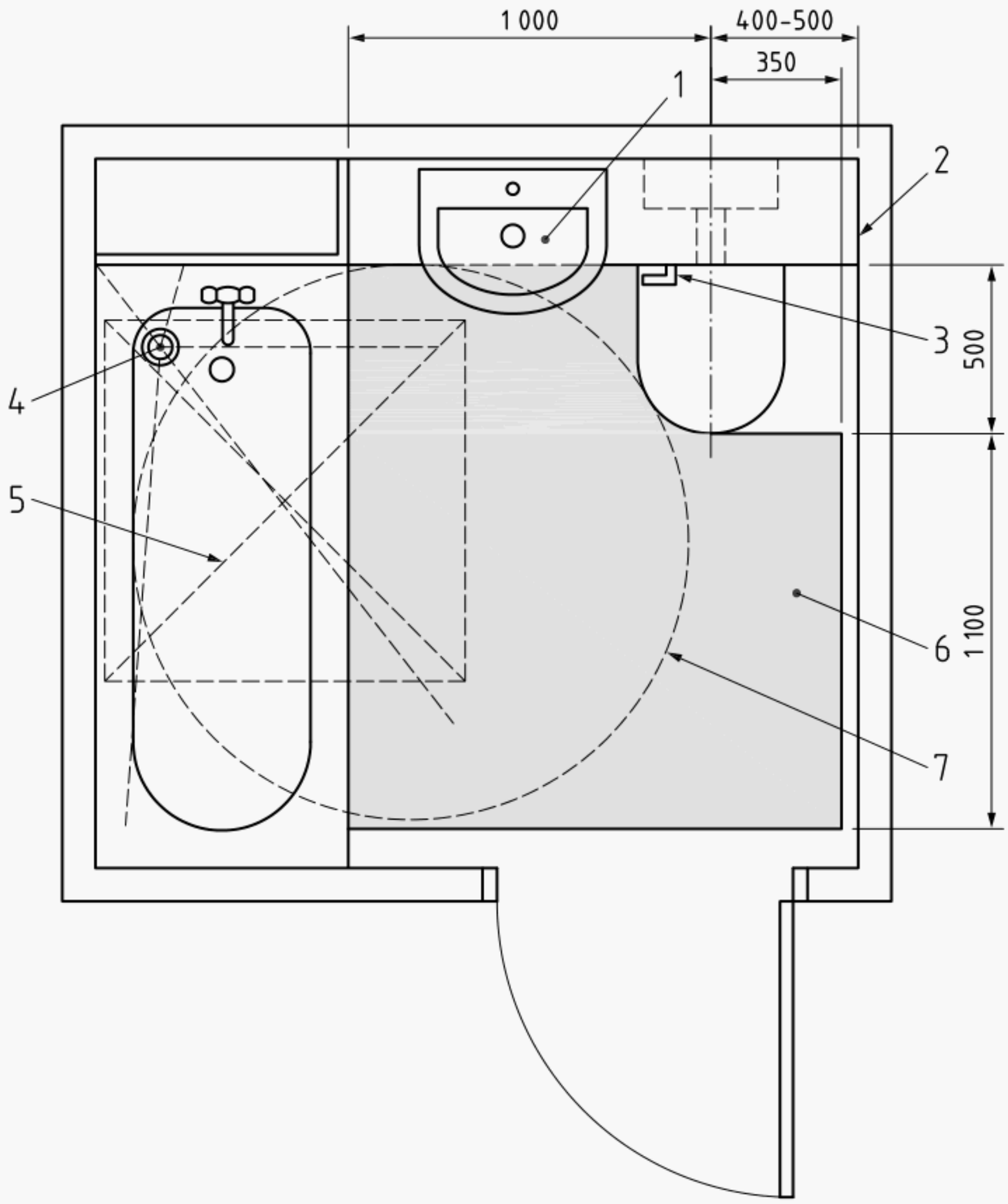

Key

1 Washbasin may project into WC approach and transfer zone by max. 200 mm [see **12.1**b)]

2 Adjacent wall

3 Flush control located on side away from adjacent wall [see **12.1**c)]

4 Floor drain under bath for future level-access shower (see **12.4**)

5 Possible location of future level-access shower

6 WC approach and transfer zone clear of obstructions and door swings

7 1 500 mm diameter manoeuvring space (available if bath is removed) (see **12.3**)

NOTE The WC approach and transfer zone incorporates the approach zones for washbasin and bath.

Licensed copy: IP Login, University of Oxford, Version correct as of 04/05/2016

Where an adaptable bathroom is proposed, designers should ensure that the positions of the soil pipe and the WC satisfy the recommendations detailed in **12.1** from the outset.

*NOTE 4 Where adaptation funds are restricted, or where a bathroom is the minimum size required to provide the provisions described in **12.3.1**, it might be more cost-effective to provide accessible sanitary facilities that achieve the recommendations detailed in **12.1** to **12.4** from the outset, rather than enabling them by adaptation.*

An even level of general lighting should be provided throughout the space with an average illuminance of at least 300 lx. Additional lighting over the washbasin, or a fused spur for additional lighting, should be provided.

NOTE 5 Further guidance is given in the Thomas Pocklington Trust guide Housing for people with sight loss *[8].*

12.4 Space and drainage provision for an accessible shower

A level-access shower should have:

a) a laid-to-fall floor surface with falls leading away from the door, or a level-access shower tray, e.g. within a screed or within the depth of a timber floor;

b) smooth transitions between the showering area, the overlapping manoeuvring circle or ellipse, and the rest of the floor.

If an accessible shower is not provided from the outset, the form of construction should enable these features to be provided by adaptation.

NOTE 1 Drainage gulleys incorporating traps and gravity drainage might not be practicable due to the choice of floor construction, as well as considerations of fire safety, thermal performance and sound insulation. This is particularly relevant to flatted development. Pumped drainage and level-access shower trays can provide a more appropriate solution in these circumstances.

NOTE 2 Where an accessible shower might be provided by adaptation, care is needed in respect of the planning of services, and in particular any under-floor heating. The provision of under-floor heating facilitates rapid drying of a wet floor.

For a level-access shower (or potential level-access shower following adaptation), space for the showering activity should be not less than 1 000 mm × 1 000 mm.

NOTE 3 Where the location of a level-access shower (or potential level-access shower following adaptation) is within an accessible bathroom, the showering area (following removal of a bath where appropriate) may overlap a 1 500 mm diameter manoeuvring circle or a 1 400 mm × 1 700 mm manoeuvring ellipse.

NOTE 4 The provision of a slip-resistant, watertight surface finish across the whole bathroom floor or WC compartment floor can facilitate the future installation of a wet room.

NOTE 5 Whether provided from the outset, or by subsequent adaptation, fall gradients providing drainage for level-access showers need to be the minimum required to effect efficient drainage from the shower area. Crossfalls need to be minimized.

12.5 Structural provision for grab rails and other support equipment

All walls within all bathrooms and WC compartments throughout the dwelling should be capable of supporting equipment such as grab rails and associated imposed loads, from finished floor level up to a height of 1 800 mm. The manufacturers' recommendations should be followed in respect of fixings and loadings.

Licensed copy: IP Login, University of Oxford, Version correct as of 04/05/2013

13 Other facilities and amenities

13.1 Living/socializing space

The following may be classed as a living/socializing space: any living room, living area, dining room, dining area, study, or other reception area that can provide seating and socializing space for the designed (full) occupancy of the dwelling, plus some visitors. The possible need for this living space to accommodate other uses [e.g. space for a temporary ground floor bed space (see Clause **4** and **13.4**)] should be taken into account.

Sufficient luminaires should be provided to give an even general lighting throughout the space. Sufficient electrical socket outlets should be provided to allow use of additional task lighting as required.

NOTE Further guidance is given in the Thomas Pocklington Trust guide Housing for people with sight loss *[8].*

13.2 Kitchen

Kitchens should have a minimum clear width of 1 200 mm between kitchen unit fronts/appliance fronts and any fixed obstruction opposite (such as other kitchen fittings or walls).

*NOTE 1 The recommendation in **4.3** applies in a kitchen if it contains the only dining space.*

Kitchen layouts should generally be planned so that the oven, hob and sink unit are in a continuous uninterrupted run of units. The run of units may be straight, L-shaped, or U-shaped.

NOTE 2 A continuous run of units of approx. 3 600 mm in length, measured along the front face, will enable adaptations to be made as required, such as a built-in oven at an accessible height beside a minimum 600 mm of work surface, a hob beside a further minimum 600 mm of work surface, and a sink/drainer with knee space beneath. It will also help avoid the risks involved in moving heavy and/or hot items across circulation spaces.

An even level of general lighting should be provided throughout the space with an average illuminance of at least 300 lx. Provision should be made for additional task lighting, e.g. at food preparation areas, hob and sink.

NOTE 3 Further guidance on lighting is given in the Thomas Pocklington Trust guide Housing for people with sight loss *[8].*

NOTE 4 Good visual contrast between adjacent surfaces, e.g. walls and worktops, and fittings, e.g. electrical switches and sockets, will help people with sight loss.

13.3 Bedrooms

It should be possible to provide a clear space of not less than 750 mm to both sides and the foot of a double bed within at least one bedroom. This bedroom should also be capable of accommodating a clear manoeuvring circle of at least 1 500 mm diameter, or an ellipse of at least 1 700 mm × 1 400 mm, which may overlap with the 750 mm clear space. This bedroom should be situated on the same storey as, and close to, an accessible or adaptable bathroom.

NOTE Locating this bedroom immediately adjacent to the accessible or adaptable bathroom will allow easy provision of a connecting door at a future date.

Other bedrooms should be capable of accommodating a clear space, not less than 750 mm wide, to one side of the bed.

All bedrooms should be capable of accommodating a clear 750 mm wide approach route between the doorway and the window.

Licensed copy: IP Login, University of Oxford, Version correct as of 04/05/2010

13.4 Temporary bed space

Dwellings with no permanent bedroom on the entrance level should be able to accommodate a temporary bed space on the entrance level. This may be provided within a living space (e.g. in the corner of a living room following rearrangement of the room's furniture), provided that the living space can remain broadly functional. Any necessary rearrangements should not compromise the step-free access to a socializing space (see Clause **4**).

Providing the temporary bed space within the dining area of a kitchen/diner will result in the least convenient temporary bed space arrangement, and should be avoided whenever possible.

The temporary bed space should be able to accommodate a single bed plus a 750 mm clear space to one side of the bed. When incorporated into a living space, this area should be capable of being screened (with a portable screen) from the remainder of the room.

*NOTE The potential temporary bed space can overlap any space identified for potential vertical transportation within the dwelling (see **10.2.1**), as the temporary bed space would not be required if vertical transportation provided access to a storey containing sleeping accommodation.*

13.5 Windows and glazed doors

13.5.1 View and privacy

In at least one room, normally the principal living space, windows should be capable of allowing people to enjoy a reasonable view below eye level when seated. At least one window in such a space should include glazing that starts no higher than (800 ±50) mm above floor level, and has no glazed pane within the field of vision less than (400 ±50) mm high.

NOTE 1 Information on the need to consider the impact resistance of glazing within 800 mm of floor level is given in BS 6262-4.

Glazing in an openable window at ground floor level should start no higher than 800 mm above floor level. Glazing in an openable window above ground level should start from as close to 850 mm as practicable.

NOTE 2 Where a statutory requirement or risk assessment recommends a minimum guarding height that cannot be reconciled with the provision of unobstructed glazing, guarding to ensure the safety of occupants needs to take priority.

Where a view is provided by a fully glazed door or doors to a Juliet balcony or an external balcony or terrace with guarding at a height of 1 100 mm or above, the design of the balustrade and guarding should be such that a view through or between them is maintained. The balcony balustrade and/or guarding should conform to the recommendations in BS 6180.

13.5.2 Window hardware

Care should be taken in the specification of windows and associated hardware to ensure that the windows are easy to open and close.

Window hardware should not require the simultaneous use of both hands.

NOTE 1 Controls that have to be gripped or twisted to be operated present difficulties for many people with limited hand dexterity. Controls that are operable with a closed fist are easier to use.

Window hardware should generally be located no higher than 1 200 mm above the floor.

NOTE 2 Where windows are located above fixed obstructions such as kitchen worktops, it is preferable to install a window to which a remotely operated control can be retrofitted.

Licensed copy: IP Login, University of Oxford, Version correct as of 04/05/2013

13.5.3 Fixed glazing and fully glazed doors in communal areas

Any fixed glazing or fully glazed doors in communal areas should be clearly highlighted with a manifestation which contrasts visually with the surface behind it under both natural and artificial lighting conditions. This manifestation should be located within two zones, from 850 mm to 1 000 mm from the floor and from 1 400 mm to 1 600 mm from the floor. The edges of a glass door should also be apparent when the door is open.

*NOTE Further guidance is given in BS 8300:2009+A1, **6.4** and **9.1.5**.*

13.6 Balconies and terraces

Access to an external balcony (except Juliet balconies) or terrace should be step-free, with an accessible threshold (see **7.7**). Any doors to an external balcony should have an effective clear opening width conforming to **7.6.2**.

The internal space adjacent to a balcony should be capable of accommodating a circulation space of at least 1 500 mm × 1 500 mm.

*NOTE This can incorporate the general manoeuvring space (see **4.3**).*

Where a view is provided by a door or doors giving access to an external guarded space such as a balcony or terrace which will require guarding at a height of 1 100 mm, the design of the balustrade and guarding should conform to the final paragraph of **13.5.1**.

13.7 Storage facilities outside the dwelling

Where storage facilities are to be provided outside a dwelling (e.g. storage for cycles, pushchairs, etc.), the storage area should be no less accessible than the associated building.

NOTE A storage area of 2 000 mm long × 1 200 mm wide is adequate for flexible storage of mobility aids or up to two bicycles.

Any door to storage facilities should have a level threshold and a minimum effective clear width of 1 000 mm.

An electrical socket should be provided in the storage area, located 450 mm to 1 000 mm from the floor. Lighting should be provided inside the storage area, and external storage areas should additionally have external lighting.

The access route between external storage facilities and an individual house or the communal entrance of a block of flats should conform to **6.1** and **6.2**, and to **6.4** or **6.5** as appropriate.

13.8 Waste and recycling facilities

The access route between waste and recycling facilities and an individual house or the communal entrance of a block of flats should conform to **6.1** and **6.2**, and to **6.4** or **6.5** as appropriate.

Licensed copy: IP Login, University of Oxford, Version correct as of 04/05/2016

Annex A (informative) Car park management

Private car park management plans and public highway parking arrangements need to give residents who hold Blue Badges priority use of such car parking.

Where there is a management body, it needs to take responsibility for enforcing and monitoring supply and demand. In particular, it is important that any management plan addresses how to meet future demand from residents and visitors who hold a Blue Badge, and indicates how the design is to accommodate such a demand, e.g. if new Blue Badge holders move into the estate or if it becomes clear that more visitor parking is needed for Blue Badge holders. Off-street parking bays and parking bays in basements are to be marked and maintained by the management body responsible.

The overall number of designated accessible parking spaces needs to take account of existing planning guidance.

Annex B (informative) Relationship between going, gradient and rise of ramps

Table B.1 shows a further interpolation of Figure 1. It shows the maximum rise and gradient acceptable for various length ramp stages.

The first column in each set of three indicates the going of the ramp, in metres.

The second column indicates the gradient which is acceptable for the corresponding going and rise. For example, 12 is 1:12.

The third column indicates the total rise that the ramp stage is overcoming, in millimetres.

Licensed copy: IP Login, University of Oxford, Version correct as of 04/05/2013

Table B.1 **Relationship between going, gradient and rise of ramps**

Going of the ramp	Gradient of the ramp [A)]	Rise of the ramp	Going of the ramp	Gradient of the ramp [A)]	Rise of the ramp	Going of the ramp	Gradient of the ramp [A)]	Rise of the ramp
m		mm	m		mm	m		mm
2	12	167	5	15	333	8	18	444
2.1	12.1	174	5.1	15.1	338	8.1	18.1	448
2.2	12.2	180	5.2	15.2	342	8.2	18.2	451
2.3	12.3	187	5.3	15.3	346	8.3	18.3	454
2.4	12.4	194	5.4	15.4	351	8.4	18.4	457
2.5	12.5	200	5.5	15.5	355	8.5	18.5	459
2.6	12.6	206	5.6	15.6	359	8.6	18.6	462
2.7	12.7	213	5.7	15.7	363	8.7	18.7	465
2.8	12.8	219	5.8	15.8	367	8.8	18.8	468
2.9	12.9	225	5.9	15.9	371	8.9	18.9	471
3	13	231	6	16	375	9	19	474
3.1	13.1	237	6.1	16.1	379	9.1	19.1	476
3.2	13.2	242	6.2	16.2	383	9.2	19.2	479
3.3	13.3	248	6.3	16.3	387	9.3	19.3	482
3.4	13.4	254	6.4	16.4	390	9.4	19.4	485
3.5	13.5	259	6.5	16.5	394	9.5	19.5	487
3.6	13.6	265	6.6	16.6	398	9.6	19.6	490
3.7	13.7	270	6.7	16.7	401	9.7	19.7	492
3.8	13.8	275	6.8	16.8	405	9.8	19.8	495
3.9	13.9	281	6.9	16.9	408	9.9	19.9	497
4	14	286	7	17	412	10	20	500
4.1	14.1	291	7.1	17.1	415			
4.2	14.2	296	7.2	17.2	419			
4.3	14.3	301	7.3	17.3	422			
4.4	14.4	306	7.4	17.4	425			
4.5	14.5	310	7.5	17.5	429			
4.6	14.6	315	7.6	17.6	432			
4.7	14.7	320	7.7	17.7	435			
4.8	14.8	324	7.8	17.8	438			
4.9	14.9	329	7.9	17.9	441			

[A)] For example, 12 is 1:12.

Licensed copy: IP Login, University of Oxford, Version correct as of 04/05/2016

Bibliography

Standards publications

For dated references, only the edition cited applies. For undated references, the latest edition of the referenced document (including any amendments) applies.

BS 5655-6, *Lifts and service lifts – Part 6: Code of practice for the selection, installation and location of new lifts*

BS 6262-4, *Glazing for buildings – Part 4: Code of practice for safety related to human impact*

BS 7671, *Requirements for electrical installations – IET Wiring Regulations – Seventeenth edition*

BS 7953, *Entrance flooring systems – Selection, installation and maintenance*

BS 8300:2009+A1:2010, *Design of buildings and their approaches to meet the needs of disabled people – Code of practice*

Other publications

[1] GOODMAN, C. and HABINTEG HOUSING ASSOCIATION. *Lifetime homes design guide*. Bracknell: IHS BRE Press, 2011.

[2] COMMUNITIES AND LOCAL GOVERNMENT. *Lifetime Homes, Lifetime Neighbourhoods – A national strategy for housing in an ageing society*. Crown Copyright, 2008.

[3] THORPE, S. and HABINTEG HOUSING ASSOCIATION. *Wheelchair housing design guide*. Second edition. Garston, Watford: BRE Press, 2006.

[4] DEPARTMENT FOR COMMUNITIES AND LOCAL GOVERNMENT. *National planning policy framework*. Crown copyright, 2012.

[5] OTB RESEARCH INSTITUTE FOR THE BUILT ENVIRONMENT, DELFT UNIVERSITY OF TECHNOLOGY. *Housing statistics in the European Union*. DOL, K. and HAFFNER, M., eds. The Hague: Ministry of the Interior and Kingdom Relations, 2010.

[6] ENGLISH PARTNERSHIPS. *Car parking – What works where*. London: English Partnerships, 2006.

[7] DEPARTMENT FOR TRANSPORT, COMMUNITIES AND LOCAL GOVERNMENT, AND WELSH ASSEMBLY GOVERNMENT. *Manual for streets*. London: Thomas Telford Publishing, 2007.

[8] THOMAS POCKLINGTON TRUST. *Housing for people with sight loss – A Thomas Pocklington Trust design guide*. EP 84. Bracknell: IHS BRE Press, 2008.

[9] DEPARTMENT FOR TRANSPORT. *Guidance on the use of tactile paving surfaces*. London: Department for Transport, 2007.

[10] BARKER, P. and FRASER, J. *Sign design guide – A guide to inclusive signage*. London: JMU and Sign Design Society, 2004.

[11] BRIGHT, K. and COOK, G. *The colour, light and contrast manual: Designing and managing inclusive built environments*. Hoboken, New Jersey: Wiley-Blackwell, 2010.

[12] ROYS, M. and WRIGHT. M. *Proprietary nosings for non domestic stairs*. Information paper 15/03. Bracknell: IHS BRE Press, 2003.

[13] DEPARTMENT OF THE ENVIRONMENT, TRANSPORT AND THE REGIONS. *Accessible thresholds in new housing – Guidance for house builders and developers*. London: The Stationery Office, 1999.

Licensed copy: IP Login, University of Oxford, Version correct as of 04/05/2013

[14] SOCIETY OF LIGHT AND LIGHTING. *SLL Lighting handbook (Society of Light and Lighting)*. London: CIBSE, 2009.

Further reading

AGE CONCERN. *Out of sight, out of mind: social exclusion behind closed doors*. London: Age Concern England, 2008.

AGE UK. *Later life in the United Kingdom*. Age UK Factsheet. London: Age UK, 2012. [4)]

COMMISSION FOR ARCHITECTURE AND THE BUILT ENVIRONMENT. *The principles of inclusive design*. London: CABE, 2006.

COMMUNITIES AND LOCAL GOVERNMENT, DEPARTMENT OF HEALTH and HOMES AND COMMUNITIES AGENCY. *HAPPI – Housing our ageing population: Panel for innovations*. London: Homes and Communities Agency, 2009.

DAVID BONNETT ASSOCIATES, HABINTEG HOUSING ASSOCIATION and AARONOVITCH, S. *Best practice guidance, wheelchair accessible housing: Designing homes that can be easily adapted for residents who are wheelchair users*, London: Greater London Authority, 2007.

DEPARTMENT OF THE ENVIRONMENT, TRANSPORT AND THE REGIONS. *Inclusive mobility – A guide to best practice on access to pedestrian and transport infrastructure*. London: DTLR Mobility and Inclusion Unit, 2002.

DEPARTMENT OF WORK AND PENSIONS *Supported housing and care homes: Guidance on regulation*. London: DWP, 2002.

HEYWOOD, Frances. *The effectiveness of housing adaptations*. Bristol: The Policy Press and the Joseph Rowntree Foundation, 2001. [5)]

HOUSING CORPORATION. *Design and quality strategy*. London: Housing Corporation, 2007.

OFFICE FOR NATIONAL STATISTICS. Mid–year population estimates, 2010. London: Office for National Statistics. [6)]

SOCIETY OF LIGHT AND LIGHTING. *SLL code for lighting (Society of Light and Lighting).* London: CIBSE, 2012.

REES, L. and LEWIS, C. *Housing sight: A guide to building accessible homes for people with sight problems*. Cymru: Royal National Institute for the Blind, 2003.

SHELTER. *Older people and housing*. Shelter Factsheet. London Shelter, 2007. [7)]

THOMAS POCKLINGTON TRUST. *Housing for people with sight loss – A practical guide to improving existing homes. Good practice guide 4*. London: Thomas Pocklington Trust, 2009.

---

4) Updated on a monthly basis. Available at http://www.ageuk.org.uk/Documents/EN-GB/Factsheets/Later_Life_UK_factsheet.pdf?dtrk=true [last accessed 25 July 2013].

5) Available at http://www.jrf.org.uk/publications/effectiveness-housing-adaptations [last accessed 25 July 2013].

6) Full report available at: www.ons.gov.uk [last accessed 25 July 2013].

7) Available at http://england.shelter.org.uk/__data/assets/pdf_file/0013/41440/factsheet_older_people_and_housing_may_2007.pdf [last accessed 25 July 2013].

Licensed copy: IP Login, University of Oxford, Version correct as of 04/05/2010

Licensed copy: IP Login, University of Oxford, Version correct as of 04/05/2013

This page deliberately left blank

Licensed copy. IP Login. University of Oxford. Version correct as of 04/05/2015

This page deliberately left blank

NO COPYING WITHOUT BSI PERMISSION EXCEPT AS PERMITTED BY COPYRIGHT LAW

British Standards Institution (BSI)

BSI is the national body responsible for preparing British Standards and other standards-related publications, information and services.

BSI is incorporated by Royal Charter. British Standards and other standardization products are published by BSI Standards Limited.

Licensed copy: IP Login, University of Oxford, Version correct as of 04/09/2014

About us

We bring together business, industry, government, consumers, innovators and others to shape their combined experience and expertise into standards -based solutions.

The knowledge embodied in our standards has been carefully assembled in a dependable format and refined through our open consultation process. Organizations of all sizes and across all sectors choose standards to help them achieve their goals.

Information on standards

We can provide you with the knowledge that your organization needs to succeed. Find out more about British Standards by visiting our website at bsigroup.com/standards or contacting our Customer Services team or Knowledge Centre.

Buying standards

You can buy and download PDF versions of BSI publications, including British and adopted European and international standards, through our website at bsigroup.com/shop, where hard copies can also be purchased.

If you need international and foreign standards from other Standards Development Organizations, hard copies can be ordered from our Customer Services team.

Subscriptions

Our range of subscription services are designed to make using standards easier for you. For further information on our subscription products go to bsigroup.com/subscriptions.

With **British Standards Online (BSOL)** you'll have instant access to over 55,000 British and adopted European and international standards from your desktop. It's available 24/7 and is refreshed daily so you'll always be up to date.

You can keep in touch with standards developments and receive substantial discounts on the purchase price of standards, both in single copy and subscription format, by becoming a **BSI Subscribing Member**.

PLUS is an updating service exclusive to BSI Subscribing Members. You will automatically receive the latest hard copy of your standards when they're revised or replaced.

To find out more about becoming a BSI Subscribing Member and the benefits of membership, please visit bsigroup.com/shop.

With a **Multi-User Network Licence (MUNL)** you are able to host standards publications on your intranet. Licences can cover as few or as many users as you wish. With updates supplied as soon as they're available, you can be sure your documentation is current. For further information, email bsmusales@bsigroup.com.

Revisions

Our British Standards and other publications are updated by amendment or revision.

We continually improve the quality of our products and services to benefit your business. If you find an inaccuracy or ambiguity within a British Standard or other BSI publication please inform the Knowledge Centre.

Copyright

All the data, software and documentation set out in all British Standards and other BSI publications are the property of and copyrighted by BSI, or some person or entity that owns copyright in the information used (such as the international standardization bodies) and has formally licensed such information to BSI for commercial publication and use. Except as permitted under the Copyright, Designs and Patents Act 1988 no extract may be reproduced, stored in a retrieval system or transmitted in any form or by any means – electronic, photocopying, recording or otherwise – without prior written permission from BSI. Details and advice can be obtained from the Copyright & Licensing Department.

Useful Contacts:

Customer Services
Tel: +44 845 086 9001
Email (orders): orders@bsigroup.com
Email (enquiries): cservices@bsigroup.com

Subscriptions
Tel: +44 845 086 9001
Email: subscriptions@bsigroup.com

Knowledge Centre
Tel: +44 20 8996 7004
Email: knowledgecentre@bsigroup.com

Copyright & Licensing
Tel: +44 20 8996 7070
Email: copyright@bsigroup.com

BSI Group Headquarters

389 Chiswick High Road London W4 4AL UK

bsi.

...making excellence a habit.™