BRITISH STANDARD

BS EN 14620-1:2006

Design and manufacture of site built, vertical, cylindrical, flat-bottomed steel tanks for the storage of refrigerated, liquefied gases with operating temperatures between 0 °C and –165 °C —

Part 1: General

The European Standard EN 14620-1:2006 has the status of a British Standard

ICS 23.020.10

NO COPYING WITHOUT BSI PERMISSION EXCEPT AS PERMITTED BY COPYRIGHT LAW

British Standards

Licensed Copy: Wang Bin, na, Fri Mar 23 02:40:28 GMT+00:00 2007, Uncontrolled Copy, (c) BSI

National foreword

This British Standard was published by BSI. It is the UK implementation of EN 14620-1:2006. It supersedes BS 7777-1:1993 which is withdrawn.

The UK participation in its preparation was entrusted to Technical Committee PVE/15, Storage tanks for the petroleum industry.

A list of organizations represented on PVE/15 can be obtained on request to its secretary.

This publication does not purport to include all the necessary provisions of a contract. Users are responsible for its correct application.

Compliance with a British Standard cannot confer immunity from legal obligations.

Licensed Copy: Wang Bin, na, Fri Mar 23 02:40:28 GMT+00:00 2007, Uncontrolled Copy, (c) BSI

This British Standard was published under the authority of the Standards Policy and Strategy Committee on 29 December 2006

© BSI 2006

ISBN 0 580 49775 5

Amendments issued since publication

Amd. No.	Date	Comments

EUROPEAN STANDARD

NORME EUROPÉENNE

EUROPÄISCHE NORM

EN 14620-1

September 2006

ICS 23.020.10

English Version

Design and manufacture of site built, vertical, cylindrical, flat-bottomed steel tanks for the storage of refrigerated, liquefied gases with operating temperatures between 0 °C and -165 °C - Part 1: General

Conception et fabrication de réservoirs en acier à fond plat, verticaux, cylindriques, construits sur site, destinés au stockage de gaz réfrigérés, liquéfiés, dont les températures de service sont comprises entre 0 °C et -165 °C - Partie 1: Généralités

Auslegung und Herstellung standortgefertigter, stehender, zylindrischer Flachboden-Stahltanks für die Lagerung von tiefkalt verflüssigten Gasen bei Betriebstemperaturen zwischen 0 °C und -165 °C - Teil 1: Allgemeines

This European Standard was approved by CEN on 20 February 2006.

CEN members are bound to comply with the CEN/CENELEC Internal Regulations which stipulate the conditions for giving this European Standard the status of a national standard without any alteration. Up-to-date lists and bibliographical references concerning such national standards may be obtained on application to the Central Secretariat or to any CEN member.

This European Standard exists in three official versions (English, French, German). A version in any other language made by translation under the responsibility of a CEN member into its own language and notified to the Central Secretariat has the same status as the official versions.

CEN members are the national standards bodies of Austria, Belgium, Cyprus, Czech Republic, Denmark, Estonia, Finland, France, Germany, Greece, Hungary, Iceland, Ireland, Italy, Latvia, Lithuania, Luxembourg, Malta, Netherlands, Norway, Poland, Portugal, Romania, Slovakia, Slovenia, Spain, Sweden, Switzerland and United Kingdom.

EUROPEAN COMMITTEE FOR STANDARDIZATION
COMITÉ EUROPÉEN DE NORMALISATION
EUROPÄISCHES KOMITEE FÜR NORMUNG

Management Centre: rue de Stassart, 36 B-1050 Brussels

© 2006 CEN All rights of exploitation in any form and by any means reserved worldwide for CEN national Members.

Ref. No. EN 14620-1:2006: E

Licensed Copy: Wang Bin, na, Fri Mar 23 02:40:28 GMT+00:00 2007, Uncontrolled Copy, (c) BSI

Contents

Page

Foreword ... 3
1 Scope ... 4
2 Normative references ... 4
3 Terms and definitions ... 5
4 Concept selection ... 9
4.1 Types of tank ... 9
Figure 1 — Examples of single containment tanks ... 11
Figure 2 — Examples of double containment tanks ... 12
Figure 3 — Examples of full containment tanks ... 13
Figure 4 — Example of membrane tank ... 14
4.2 Risk assessment ... 14
5 Quality assurance and quality control ... 17
6 Health, safety and environment plan ... 17
7 General design considerations ... 17
7.1 General ... 17
7.2 Protection systems ... 21
7.3 Actions (loadings) ... 23
8 Inspection and maintenance ... 27
Annex A (informative) Physical properties of gases ... 28
Table A.1 — Physical properties of pure gases ... 28
Annex B (normative) Design information ... 29
Annex C (normative) Seismic analysis ... 31
Annex D (informative) Tank heating system ... 34
Bibliography ... 36

Licensed Copy: Wang Bin, na, Fri Mar 23 02:40:28 GMT+00:00 2007, Uncontrolled Copy, (c) BSI

Foreword

This European Standard (EN 14620-1:2006) has been prepared by Technical Committee CEN/TC 265 “Site built metallic tanks for the storage of liquids”, the secretariat of which is held by BSI.

This European Standard shall be given the status of a national standard, either by publication of an identical text or by endorsement, at the latest by March 2007, and conflicting national standards shall be withdrawn at the latest by March 2007.

EN 14620 *Design and manufacture of site built, vertical, cylindrical, flat-bottomed steel tanks for the storage of refrigerated, liquefied gases with operating temperatures between 0 °C and -165 °C* consists of the following parts:

— Part 1: General;

— Part 2: Metallic components;

— Part 3: Concrete components;

— Part 4: Insulation components;

— Part 5: Testing, drying, purging and cool-down.

According to the CEN/CENELEC Internal Regulations, the national standards organizations of the following countries are bound to implement this European Standard: Austria, Belgium, Cyprus, Czech Republic, Denmark, Estonia, Finland, France, Germany, Greece, Hungary, Iceland, Ireland, Italy, Latvia, Lithuania, Luxembourg, Malta, Netherlands, Norway, Poland, Portugal, Romania, Slovakia, Slovenia, Spain, Sweden, Switzerland and United Kingdom.

Licensed Copy: Wang Bin, na, Fri Mar 23 02:40:28 GMT+00:00 2007, Uncontrolled Copy, (c) BSI

Licensed Copy: Wang Bin, na, Fri Mar 23 02:40:28 GMT+00:00 2007, Uncontrolled Copy, (c) BSI

1 Scope

This European Standard is a specification for vertical, cylindrical tanks, built on site, above ground and of which the primary liquid container is made of steel. The secondary container, if applicable, may be of steel or of concrete or a combination of both. An inner tank made only of pre-stressed concrete is excluded from the scope of this European Standard.

This European Standard specifies principles and application rules for the structural design of the “containment” during construction, testing, commissioning, operation (accidental included), and decommissioning. It does not address the requirements for ancillary equipment such as pumps, pumpwells, valves, piping, instrumentation, staircases etc. unless they can affect the structural design of the tank.

This European Standard applies to storage tanks designed to store products, having an atmospheric boiling point below ambient temperature, in a dual phase, i.e. liquid and vapour. The equilibrium between liquid and vapour phases being maintained by cooling down the product to a temperature equal to, or just below, its atmospheric boiling point in combination with a slight overpressure in the storage tank.

The maximum design pressure of the tanks covered by this European Standard is limited to 500 mbar. For higher pressures, reference can be made to EN 13445, Parts 1 to 5.

The operating range of the gasses to be stored is between 0 °C and –165 °C. The tanks for the storage of liquefied oxygen, nitrogen and argon are excluded.

The tanks are used to store large volumes of hydrocarbon products and ammonia with low temperature boiling points, generally called “Refrigerated Liquefied Gases” (RLG’s). Typical products stored in the tanks are: methane, ethane, propane, butane, ethylene, propylene, butadiene (this range includes the LNG’s and LPG’s).

NOTE Properties of the gases are given in Annex A.

The requirements of this European Standard cannot cover all details of design and construction because of the variety of sizes and configurations that may be employed. Where complete requirements for a specific design are not provided, the intention is for the designer, subject to approval of the purchaser's authorized representative, to provide design and details that are as safe as those laid out in this European Standard.

This European Standard specifies general requirements for the tank concept, selection and general design considerations.

2 Normative references

The following referenced documents are indispensable for the application of this European Standard. For dated references, only the edition cited applies. For undated references, the latest edition of the referenced document (including any amendments) applies.

EN 1991-1-4, *Eurocode 1: Actions on structures — Part 1-4: Wind actions*

EN 1991-1-6, *Eurocode 1: Actions on structures — Part 1-6: General actions — Actions during execution*

EN 1992-1-1:2004, *Eurocode 2: Design of concrete structures — Part 1-1: General rules and rules for buildings*

EN 1997-1:2004, *Eurocode 7: Geotechnical design — Part 1: General rules*

EN 1998-1:2004, *Eurocode 8: Design of structures for earthquake resistance — Part 1: General rules, seismic actions and rules for buildings*

ENV 1998-4:1998, *Eurocode 8: Design provisions for earthquake resistance of structures — Part 4: Silos, tanks and pipelines*

EN 14620-2:, *Design and manufacture of site built, vertical, cylindrical, flat-bottomed steel tanks for the storage of refrigerated, liquefied gases with operating temperatures between 0 °C and –165 °C — Part 2: Metallic components*

EN 14620-3:2006, *Design and manufacture of site built, vertical, cylindrical, flat-bottomed steel tanks for the storage of refrigerated, liquefied gases with operating temperatures between 0 °C and –165 °C — Part 3: Concrete components*

EN 14620-4, *Design and manufacture of site built, vertical, cylindrical, flat-bottomed steel tanks for the storage of refrigerated, liquefied gases with operating temperatures between 0 °C and –165 °C — Part 4: Insulation components*

EN 14620-5, *Design and manufacture of site built, vertical, cylindrical, flat-bottomed steel tanks for the storage of refrigerated, liquefied gases with operating temperatures between 0 °C and –165 °C — Part 5: Testing, drying, purging and cool-down*

3 Terms and definitions

For the purposes of this European Standard, the following terms and definitions apply.

3.1
action
a) set of forces (loads) applied to the structure (direct action)

b) set of imposed deformation or accelerations caused for example, by temperature changes, moisture variation, uneven settlement or earthquakes (indirect action)

3.2
annular space
space between the inner shell and outer shell or wall of self-supporting tanks

3.3
base slab
continuous concrete base supporting the tank (either on the ground or elevated)

3.4
boil-off
process of vaporization of refrigerated liquid by heat conducted through the insulation surrounding the storage tank

3.5
bund wall
low construction of earth or concrete surrounding the storage tank at a considerable distance to contain spilled liquid

3.6
polymeric vapour barrier
reinforced or un-reinforced polymeric layer applied to the concrete to function as a product vapour, water vapour and in some cases as liquid barrier

Licensed Copy: Wang Bin, na, Fri Mar 23 02:40:28 GMT+00:00 2007, Uncontrolled Copy, (c) BSI

3.7
contractor
company with which the purchaser agrees a proposal for the design, construction, testing and commissioning of a tank

3.8
design pressure
maximum permissible pressure

3.9
design negative pressure
maximum permissible negative pressure (vacuum)

3.10
design metal temperature
minimum temperature for which the metal component is designed

NOTE It may be the minimum design temperature (in the case of the primary container) or a higher calculated temperature.

3.11
double containment tank
see 4.1.2

3.12
foundations
elements of the construction that comprise the base slab, ring-wall or pile system required to support the tank and contents

3.13
full containment tank
see 4.1.3.

NOTE The secondary container contains the vapour in normal operation and ensures controlled venting in the case of a primary container leakage.

3.14
hazard
event having the potential to cause harm, including ill health and injury, damage to property, products or the environment, production losses or increased liabilities

3.15
inner tank
metallic self-supporting cylindrical primary container

3.16
insulation space
volume containing insulation material in the tank annular space, and between the tank bottoms or roofs

3.17
liner
metallic plate installed against the inside of the concrete outer tank, impervious to product vapour and water vapour

3.18
load bearing insulation
thermal insulation with special properties capable of transferring loads to the appropriate load bearing structures

Licensed Copy: Wang Bin, na, Fri Mar 23 02:40:28 GMT+00:00 2007, Uncontrolled Copy, (c) BSI

3.19
lodmat
lowest one-day average ambient temperature.

Note The average temperature is half the sum of the maximum and minimum temperature

3.20
maximum design liquid level
maximum liquid level that will be maintained during operation of the tank used for the static shell thickness determination

3.21
maximum normal operating level
Maximum liquid level that will be maintained during normal operation of the tank. Normally the level at which the first high level alarm is set

3.22
membrane
thin metallic primary container of a membrane tank

3.23
membrane tank
containment whereby a membrane (primary container) together with load bearing thermal insulation and a concrete tank are forming jointly an integrated, composite tank structure

3.24
minimum design temperature
assumed temperature of the product, specified by the purchaser, for which the tank is designed

NOTE This temperature may be lower than the actual product temperature.

3.25
Operating Basis Earthquake (OBE)
maximum earthquake event for which no damage is sustained and restart and safe operation can continue

NOTE This event would result in no loss to the operational integrity and public safety is assured.

3.26
outer tank
self-supporting cylindrical secondary container made of steel or concrete

3.27
purchaser
company who gives an order to the contractor for the design, construction and testing of a tank

3.28
primary liquid container
part of a single, double, full containment or membrane tank that contains the liquid during normal operation

3.29
product vapour barrier
polymeric vapour barrier or a liner to prevent escape of product vapours from the tank

3.30
ringbeam
circular support under the shell of the tank

Licensed Copy: Wang Bin, na, Fri Mar 23 02:40:28 GMT+00:00 2007, Uncontrolled Copy, (c) BSI

3.31
roll-over
uncontrolled mass movement of stored liquid, correcting an unstable state of stratified liquids of different densities and resulting in a significant evolution of product vapour

3.32
roof
structure on top of a shell or wall containing the vapour pressure and sealing off the contents from the atmosphere

3.33
Safe Shutdown Earthquake (SSE)
maximum earthquake event for which the essential fail-safe functions and mechanisms are designed to be preserved

NOTE Permanent damage can be accepted, but without the loss of overall integrity and containment. The tank would not remain in operation without a detailed examination and structural assessment.

3.34
secondary liquid container
part of the outer container of a double, full containment or membrane tank that contains the liquid

3.35
self supporting tank
container designed to carry the hydrostatic forces of the stored liquid and the vapour pressure loads, if applicable

3.36
set pressure
pressure at which the pressure relief device first opens

3.37
shell
metallic vertical cylinder

3.38
single containment tank
see 4.1.1

NOTE The product vapour is contained by the primary container or by means of a metallic outer tank.

3.39
suspended roof
structure for supporting the internal insulation of the roof

3.40
test pressure
air pressure in the tank during testing

3.41
Thermal Protection System (TPS)
thermally insulating and liquid tight structure in order to protect the outer tank against low temperatures

NOTE Examples include bottom and bottom corner (see also 7.1.11).

3.42
vapour container
part of a single, double, full containment or membrane tank that contains the vapour during normal operation

Licensed Copy: Wang Bin, na, Fri Mar 23 02:40:28 GMT+00:00 2007, Uncontrolled Copy, (c) BSI

Licensed Copy: Wang Bin, na, Fri Mar 23 02:40:28 GMT+00:00 2007, Uncontrolled Copy, (c) BSI

3.43
wall
concrete vertical cylinder

3.44
vapour barrier
barrier to prevent entry of water vapour and other atmospheric gases into the insulation or into the outer tank

4 Concept selection

4.1 Types of tank

4.1.1 Single containment

A single containment tank shall consist of only one container to store the liquid product (primary liquid container). This primary liquid container shall be a self-supporting, steel, cylindrical tank.

The product vapours shall be contained by:

— either the steel dome roof of the container;

— or, when the primary liquid container is an open top cup, by a gas-tight metallic outer tank encompassing the primary liquid container, but being only designed to contain the product vapours and to hold and protect the thermal insulation.

NOTE 1 Depending on the options taken for vapour containment and thermal insulation; several types of single containment tanks exist.

A single containment tank shall be surrounded by a bund wall to contain possible product leakage.

NOTE 2 For examples of single containment tanks, see Figure 1.

4.1.2 Double containment

A double containment tank shall consist of a liquid and vapour tight primary container, which itself is a single containment tank, built inside a liquid-tight secondary container.

The secondary container shall be designed to hold all the liquid contents of the primary container in case it leaks. The annular space, between the primary and secondary containers, shall not be more than 6,0 m.

NOTE 1 The secondary container is open at the top and therefore cannot prevent the escape of product vapours. The space between primary and secondary container can be covered by a “rain shield” to prevent the entry of rain, snow, dirt etc.

NOTE 2 For examples of double containment tanks, see Figure 2.

4.1.3 Full containment

A full containment tank shall consist of a primary container and a secondary container, which together form an integrated storage tank. The primary container shall be a self-standing steel, single shell tank, holding the liquid product.

The primary container shall:

— either be open at the top, in which case it does not contain the product vapours

— or equipped with a dome roof so that the product vapours are contained.

The secondary container shall be a self-supporting steel or concrete tank equipped with a dome roof and designed to combine the following functions:

— in normal tank service: to provide the primary vapour containment of the tank (this in case of open top primary container) and to hold the thermal insulation of the primary container;

— in case of leakage of the primary container: to contain all liquid product and to remain structurally vapour tight. Venting release is acceptable but shall be controlled (pressure relief system).

The annular space between the primary and secondary containers shall not be more than 2,0 m.

NOTE 1 Full containment tanks with thermal insulation placed external to the secondary container are also covered by these requirements.

NOTE 2 For examples of full containment tanks, see Figure 3.

4.1.4 Membrane containment

A membrane tank shall consist of a thin steel primary container (membrane) together with thermal insulation and a concrete tank jointly forming an integrated, composite structure. This composite structure shall provide the liquid containment.

All hydrostatic loads and other loadings on the membrane shall be transferred via the load-bearing insulation onto the concrete tank.

The vapours shall be contained by the tank roof, which can be either a similar composite structure or with a gas-tight dome roof and insulation on a suspended roof.

NOTE For an example of a membrane tank, see Figure 4.

In case of leakage of the membrane, the concrete tank, in combination with the insulation system, shall be designed such that it can contain the liquid.

Licensed Copy: Wang Bin, na, Fri Mar 23 02:40:28 GMT+00:00 2007, Uncontrolled Copy, (c) BSI

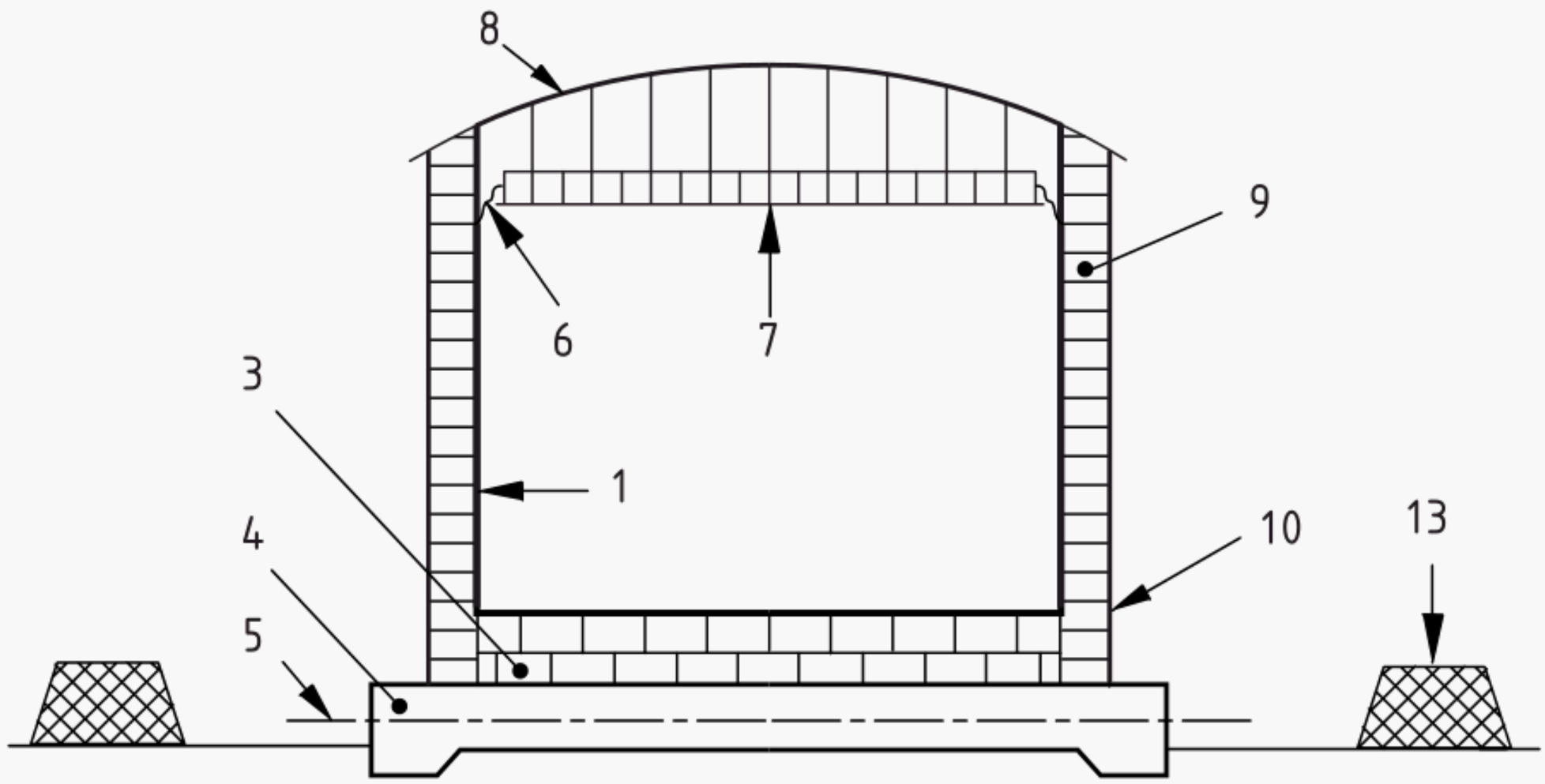

a)

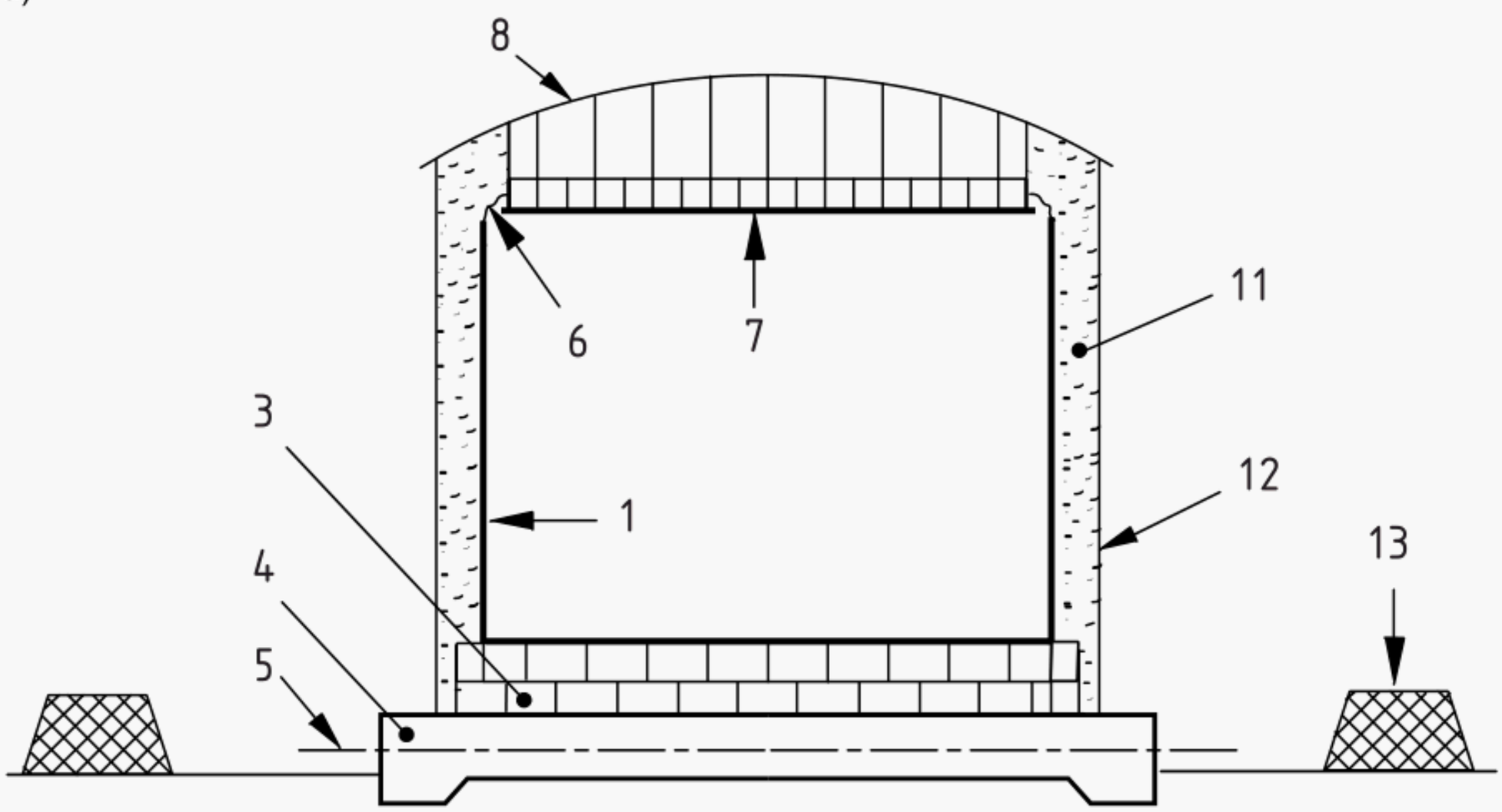

b)

Key

1	primary container (steel)	8	roof (steel)
3	bottom insulation	9	external shell insulation
4	foundation	10	external water vapour barrier
5	foundation heating system	11	loose fill insulation
6	flexible insulating seal	12	outer steel shell (not capable of containing liquid)
7	suspended roof (insulated)	13	bund wall

Figure 1 — Examples of single containment tanks

Licensed Copy: Wang Bin, na, Fri Mar 23 02:40:28 GMT+00:00 2007, Uncontrolled Copy, (c) BSI

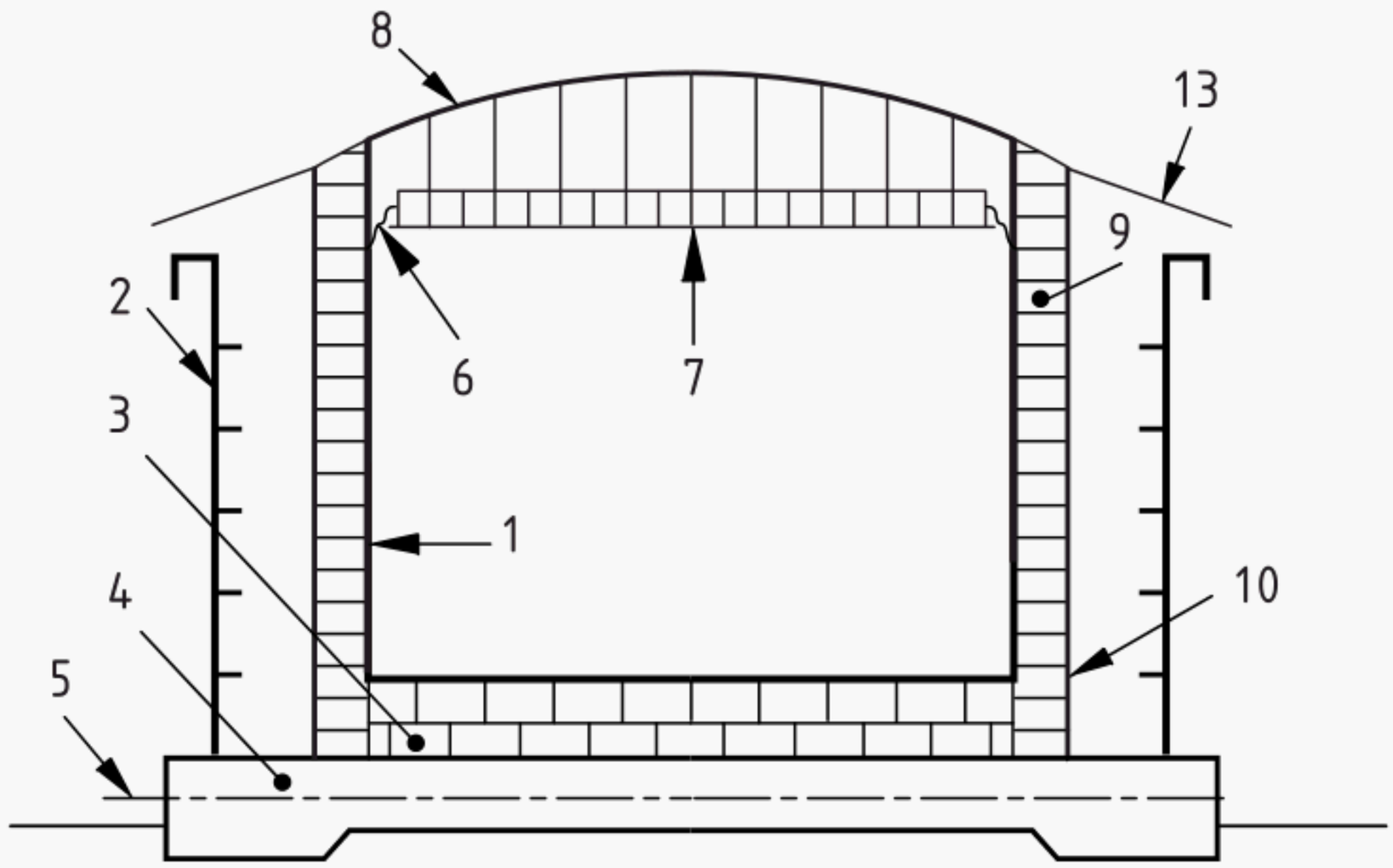

a)

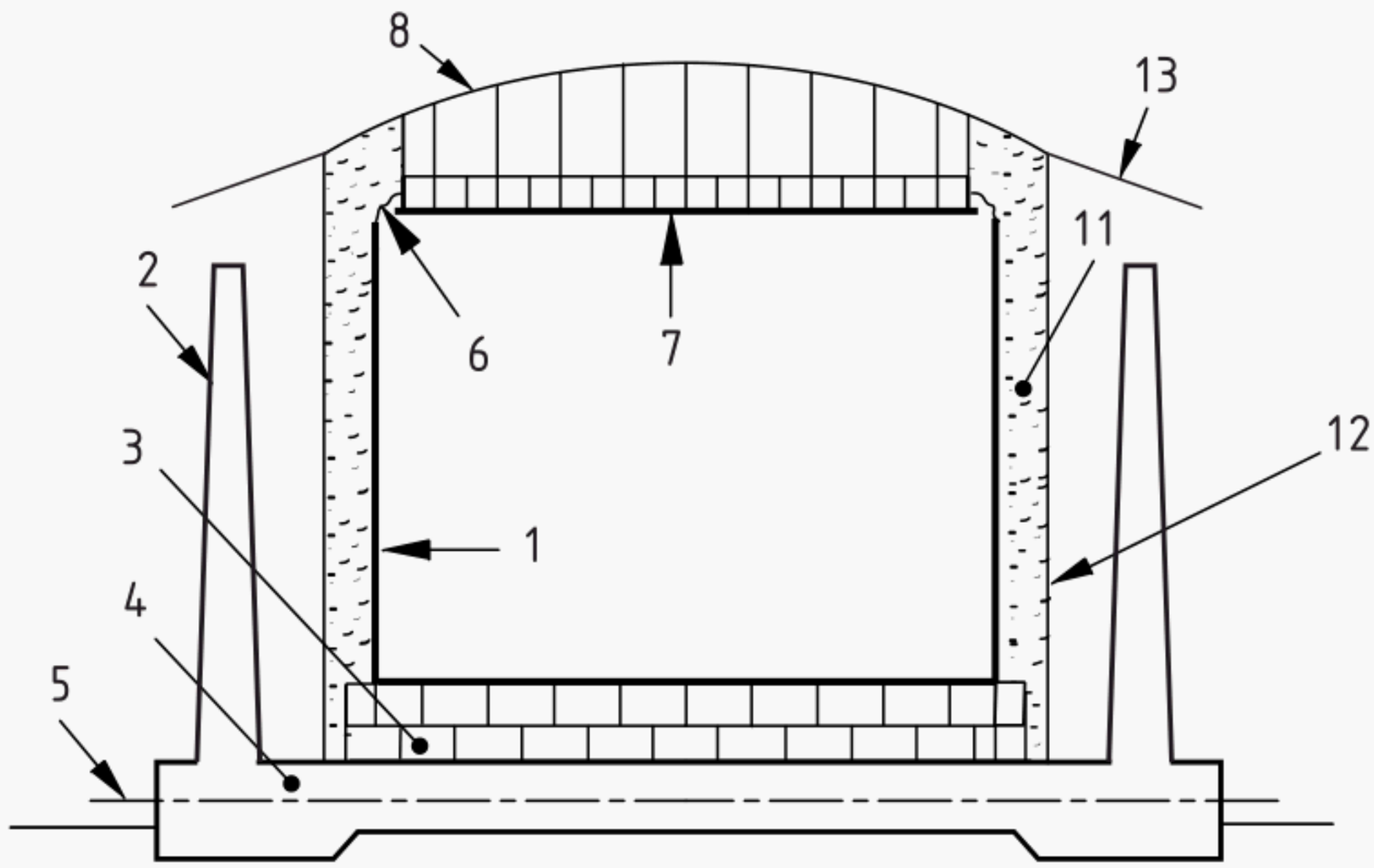

b)

Key

1	primary container (steel)	8	roof (steel)
2	secondary container (steel or concrete)	9	external insulation
3	bottom insulation	10	external water vapour barrier
4	foundation	11	loose fill insulation
5	foundation heating system	12	outer shell (not capable of containing liquid)
6	flexible insulating seal	13	cover (rain shield)
7	suspended roof (insulated)		

Figure 2 — Examples of double containment tanks

Licensed Copy: Wang Bin, na, Fri Mar 23 02:40:28 GMT+00:00 2007, Uncontrolled Copy, (c) BSI

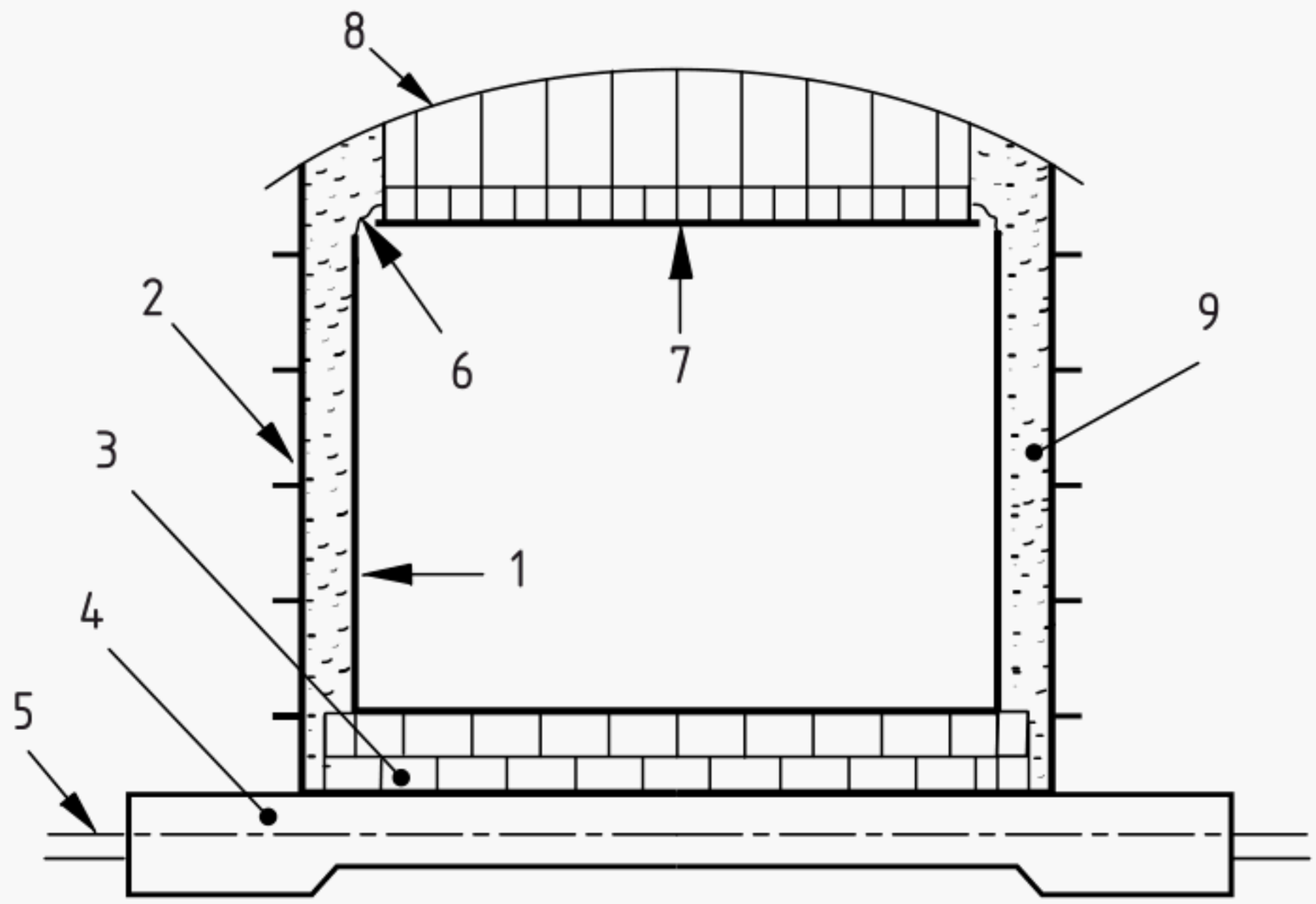

a)

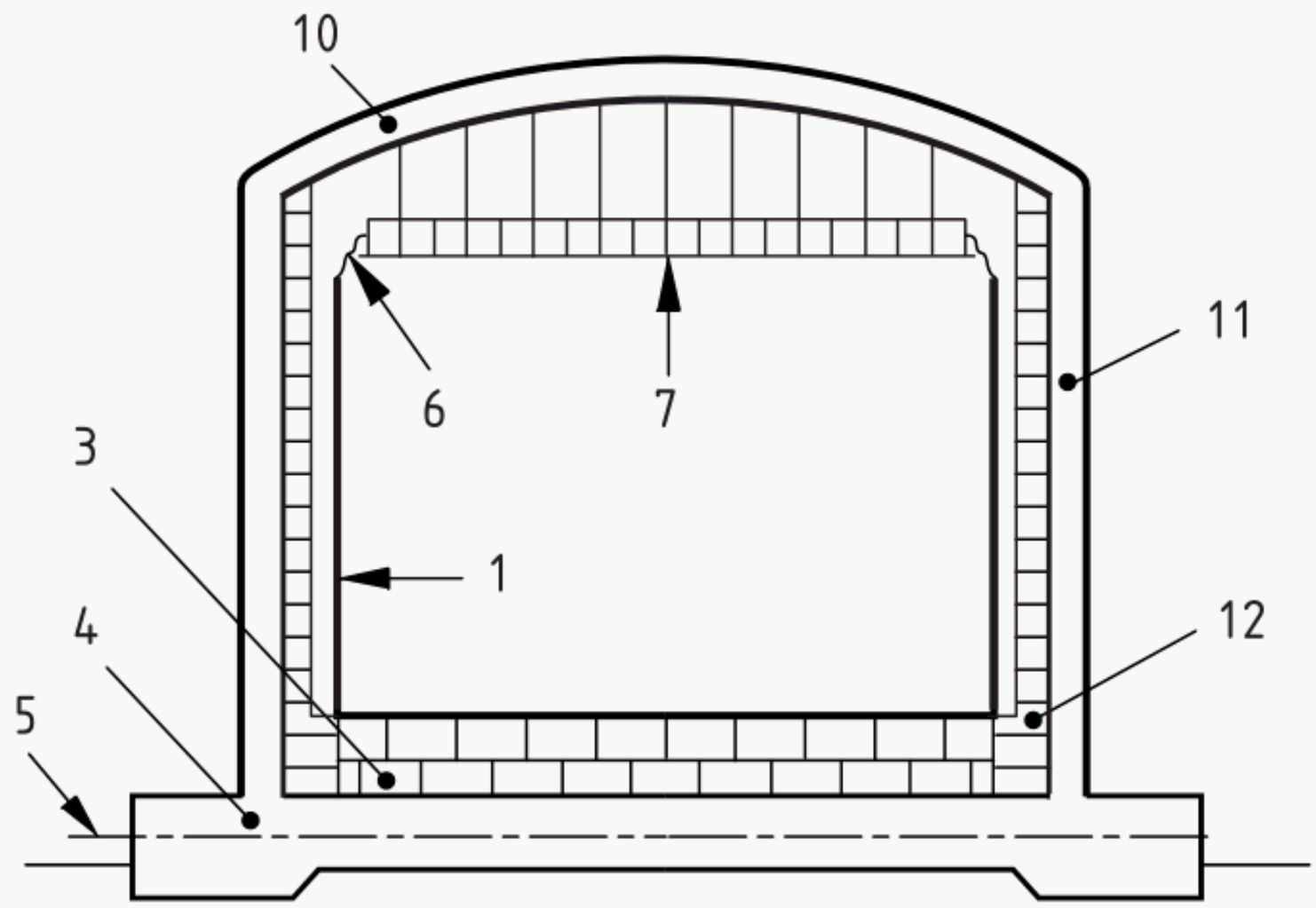

b)

Key

1	primary container (steel)	7	suspended roof (insulated)
2	secondary container (steel)	8	roof (steel)
3	bottom insulation	9	loose fill insulation
4	foundation	10	concrete roof
5	foundation heating system	11	pre-stressed concrete outer tank (secondary container)
6	flexible insulating seal	12	insulation on inside of pre-stressed concrete outer tank

Figure 3 — Examples of full containment tanks

Licensed Copy: Wang Bin, na, Fri Mar 23 02:40:28 GMT+00:00 2007, Uncontrolled Copy, (c) BSI

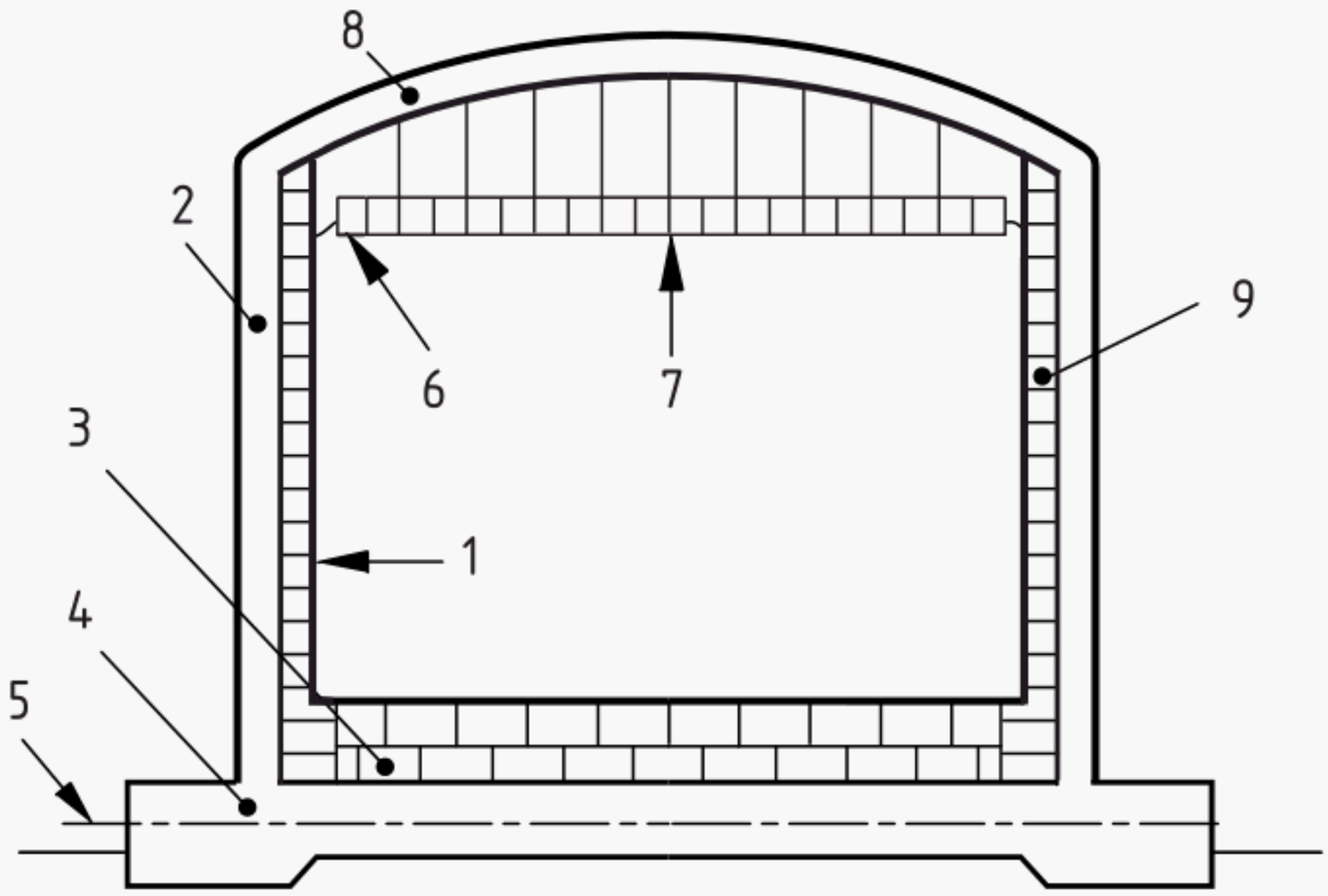

Key

1 Primary container (membrane)
2 Secondary container (concrete)
3 Bottom insulation
4 Foundation
5 Foundation heating system
6 Flexible insulating seal
7 Suspended roof (insulated)
8 Concrete roof
9 Insulation on inside of pre-stressed concrete outer tank

Figure 4 — Example of membrane tank

4.2 Risk assessment

4.2.1 General

The type of tank shall be selected based on a risk assessment.

The purchaser shall be responsible for the risk assessment (specifying/justifying the risk criteria).

NOTE A consultant may carry out the assessment. Assistance may be needed from the contractor.

4.2.2 Site selection

Before identification of hazards can be carried out, the site shall be selected. In general, the storage tank shall be placed such that the pipe connections to the receiving and supply sources are as short as possible. However, other requirements e.g. local regulations and safety distances (adjacent installations and plant boundaries) site and soil conditions, possible earthquake loading and pipe routings shall be considered.

4.2.3 Pre-selection of storage type

A pre-selection of the storage type shall be carried out. This shall mainly be based on the environment of the tank.

NOTE In “remote” located areas, where limited population or facilities are present, a single containment tank may be appropriate. For other areas, the double or full containment tank or a membrane tank may be required.

Licensed Copy: Wang Bin, na, Fri Mar 23 02:40:28 GMT+00:00 2007, Uncontrolled Copy, (c) BSI

The materials of the main components, steel or concrete, and design details, e.g. the inlet/outlet, elevated or grade level foundation and protection systems, shall be selected so that sufficient information is available for the risk assessment.

The risk assessment shall demonstrate that the risks to property and life are acceptable, both inside and outside the plant boundary.

The risk assessment process shall start with the hazard identification study.

4.2.4 Hazard identification

A hazard identification study shall not only be carried out for the normal operation of the tank, but also for all other phases in the design life of the tank (design, construction, cool down, commissioning, decommissioning and even possible abandonment). As a minimum, the following shall be considered:

1) external threats to tank integrity:

— natural/environmental (snow, earthquake, high wind, lightning, flood, high temperature);

— infrastructure (aircraft crash, impacts from adjacent facilities including fire, explosion, transport);

— site lay-out (fire and explosion in plant, relief valve fire, construction, traffic etc.);

— operational philosophy/practice and plant upsets;

2) internal threats to tank integrity:

— mechanical failure e.g. thermal shock, corrosion, frost heave of foundation, leakage of flanges;

— equipment failure (relief valves, liquid level gauging etc.);

— operational and maintenance errors (overfilling, rollover, dropped pump, overpressure etc.).

3) consequences of failure of tank integrity:

— effects on people off-site (leakage of toxic vapour/liquid, fires and explosions);

— effects on people on-site (leakage of toxic vapour/liquid, fires and explosions);

— environmental damage (leakage vapour/liquid and fires);

— effects on adjacent plant (plant damage);

— effects on other parts of the facility (knock-on effect, production loss).

4.2.5 Methodology

4.2.5.1 General

The methodology of the risk assessment shall be either probabilistic or deterministic.

4.2.5.2 Probabilistic

The probabilistic approach shall consist of:

— listing of potential hazards of external and internal origin;

Licensed Copy: Wang Bin, na, Fri Mar 23 02:40:28 GMT+00:00 2007, Uncontrolled Copy, (c) BSI

— collecting failure rate data;

— determination of the frequency of these hazards;

— determination of the effects on event consequences and probabilities of available mitigation measures;

— examination of the potential knock-on effects;

— determination of the consequences of each hazard;

— determination of risk by multiplying frequency and consequence and summing over all scenarios;

— comparison of risk levels with predetermined target values.

4.2.5.3 Deterministic

The deterministic approach consists of:

— listing of hazards;

— establishment of credible scenarios;

— determination of the consequences;

— justification of the necessary safety improvement measures to limit the risks.

4.2.6 Changes

4.2.6.1 Potential changes

Attention shall be paid to possible changes of the hazard situation during the lifetime of the tank/plant to avoid lack of safety in the future.

NOTE Other facilities can be built near the tank or outside the plant boundaries. Otherwise, in the case of a major change, the risk and damage potential may have to be assessed again and improvements may be required.

4.2.6.2 Changes based on findings

The outcome of the risk assessment shall be evaluated carefully. If changes have to be carried out then the risk assessment shall be repeated.

4.2.7 Determination of actions

The risk assessment shall identify critical factors that shall be taken into account in the design of the tank. The accidental actions (spillages, fires, explosions etc.) shall be identified.

4.2.8 Risk profiles

When required by local authorities, risk profiles shall be calculated by determining the consequences from a number of scenarios. By adapting certain criteria for death from toxic substances, radiation from fires and explosion over pressure, effect distances shall be determined. Based on incident frequencies and effects from meteorological conditions (wind direction, stability etc.) the contribution from each scenario to a point at a distance from the activity shall be calculated. By putting a grid over the area surrounding the activity and summing the contribution from all scenarios for each grid point a three dimensional (x, y, risk) picture shall emerge.

Licensed Copy: Wang Bin, na, Fri Mar 23 02:40:28 GMT+00:00 2007, Uncontrolled Copy, (c) BSI

NOTE Usually this picture is then reduced to 2D by connecting points of equal risk (e.g. 10^{-5}, 10^{-6} and 10^{-7} fatalities per year) creating the risk profiles. Legalized risk criteria exist for a number of countries or can be developed in consultation with authorities.

5 Quality assurance and quality control

A quality management system for the design, procurement of materials, construction and testing of the tank shall be incorporated.

NOTE The guidance given in EN ISO 9001 is highly recommended.

6 Health, safety and environment plan

The contractor shall prepare a Health, Safety and Environment (HSE) plan for the design, construction and commissioning of the tank which shall conform to the overall objectives set out by the purchaser. The plan shall include the responsibilities, activities applicable to local or national laws and legislation. It shall specify requirements for safe working procedures for personnel safety and environmental protection during the design and construction phases.

7 General design considerations

7.1 General

7.1.1 Responsibilities

The purchaser shall be responsible for the specification of essential tank design data in accordance with Annex B.

The contractor shall be responsible for the design, procurement and construction of the tank.

Subjects of interface e.g. pre-commissioning and commissioning shall be agreed between the purchaser and the contractor.

Since separate parties often carry out the design of steel, concrete and insulation components, it is essential that there is a clear understanding of the split of work and responsibilities, so that the final tank design is fully integrated. There shall be a defined reporting structure between the various engineering parties, with one party having the responsibility for all engineering co-ordination.

NOTE An example scenario might be the temperature distribution over the whole tank structure and the actions resulting from the data.

7.1.2 Performance criteria

The tank shall be designed so that:

— under normal operating conditions, the liquid and the vapour is contained;

— it can be filled and emptied at the specified rates;

— boil-off is controlled and in exceptional cases can be relieved to flare or vent;

— pressure operating range specified is maintained;

Licensed Copy: Wang Bin, na, Fri Mar 23 02:40:28 GMT+00:00 2007, Uncontrolled Copy, (c) BSI

— ingress of air and moisture is prevented, except in exceptional cases when the vacuum relief valves have to be used;

— boil-off is as specified and condensation/frost on the external surface is minimised. Frost heave of the foundation shall be prevented;

— damage due to specified accidental actions is limited and will not result in loss of liquid.

NOTE At certain locations, where the ambient temperature can fall below the product temperature (butane tank in cold climates), condensation can occur at the inside of the outer tank roof when a suspended roof is used. The condensed product can enter the annular space and cause problems. Special arrangements can be made to divert the product into the inner tank or alternatively, another roof insulation system can be selected.

7.1.3 Limit state and allowable stress theory

In general, European Standards for buildings and structures are based on the limit state theory.

For steel tanks and the insulation systems, limited experience has been obtained with the use of the limit state. Therefore, those components shall either be designed within this European Standard using the customary allowable stress theory or the limit state theory. For more details, see EN 14620-2 and EN 14620-4.

For limit state theory, the following two categories shall be applied:

— Serviceability Limit State (SLS), which is determined on the basis of criteria applicable to functional capacity or to durability properties under normal actions;

— Ultimate Limit State (ULS), which is determined on the basis of the risk of failure, large plastic displacements or strains comparable to failure under accidental actions.

7.1.4 Earthquake design

The purchaser shall evaluate the potential of earthquake activity to determine the characteristics of seismic ground motion and associated response spectra for the Operating Basis Earthquake (OBE) and the Safe Shutdown Earthquake (SSE), as defined in 7.3.2.2.13 and 7.3.3.3 below.

The primary container shall be designed for OBE and SSE actions with the primary container filled to the maximum normal operating level.

If a secondary container is used, this container shall be designed for OBE and SSE actions without the liquid in the secondary container. The secondary container shall also be designed to contain the full liquid volume (maximum normal operating) after an OBE level seismic event.

The membrane of membrane tanks shall be designed for OBE action. In case of a SSE action, the membrane may fail but the concrete tank; including the corner protection system, shall contain the liquid.

The site-specific investigation required shall account for the following:

— regional seismicity, tectonics and geology;

— expected recurrence rates and maximum magnitudes of events on known faults and source zones during the design life of the RLG facilities;

— location of the site with respect to these seismic sources;

— local subsurface geology of the site;

— attenuation of ground motion including near source effects, if any.

Licensed Copy: Wang Bin, na, Fri Mar 23 02:40:28 GMT+00:00 2007, Uncontrolled Copy, (c) BSI

Both the horizontal component response spectra and the vertical component response spectra for OBE and SSE shall be developed. However, the ordinates of the vertical component response spectra shall not be less than 50 % of those of the corresponding horizontal component response spectra.

For single, double and full containment tanks, the primary liquid container shall be designed to contain the liquid during an OBE and SSE action.

For membrane tanks, the membrane or the concrete outer tank, including the bottom/corner protection system, shall contain the liquid.

For seismic analysis, the requirements given in Annex C shall be followed.

7.1.5 Tightness

The liquid and vapour tightness of a steel plate shall be assumed.

The liquid tightness, if applicable, and vapour tightness of a polymeric vapour barrier shall be demonstrated.

The liquid tightness of the pre-stressed concrete structure, without a liquid tight liner, shall be defined by the minimum compression zone in the concrete structure.

NOTE For details, see EN 14620-3:2006.

7.1.6 Connections to primary and secondary containers

7.1.6.1 Inlets and outlets

NOTE All inlets and outlets should, preferably, be made via the roof of the tank. This is based on the philosophy that the risk of serious leakage is reduced to a minimum. It will necessitate the use of in-tank pumps for product liquid removal.

In cases where bottom inlets and outlets are used, the following shall apply:

— remote operated internal shut-off valve shall be installed or;

— bottom connection shall be designed as part of the primary container. The first valve shall be of a remote operated type and welded to the bottom connection. Flange connections shall not be allowed.

For membrane tanks, inlets and outlets shall only be routed via the roof of the tank.

7.1.6.2 Other connections

Other connections (e.g. guides, bracing) to the primary and secondary container shall be minimized.

7.1.7 Maximum design liquid level

The primary container shall provide a minimum freeboard above the design liquid level equal to 300 mm.

NOTE This level difference may be taken into account to determine the allowance needed for the sloshing of liquid during an earthquake.

Licensed Copy: Wang Bin, na, Fri Mar 23 02:40:28 GMT+00:00 2007, Uncontrolled Copy, (c) BSI

7.1.8 Cool down

A piping system for cool down of the tank shall be provided. The system shall be designed such that the specified cool-down rates can be maintained. Spray nozzles or other suitable methods/devices shall be used to ensure full evaporation/distribution of the liquid.

7.1.9 Foundation

The foundation shall be designed such that the settlement of the tank and its connections can be absorbed. The following types are commonly used:

— shallow foundation (tank pad with concrete ring-wall or concrete slab foundation);

— pile foundation (base slab on piles either on grade level or elevated).

Soil and seismological investigations shall be carried out to determine the nature and geotechnical properties of the soil.

The soil investigation shall be carried out in accordance with EN 1997-1:2004. The earthquake resistance of structures shall be in accordance with EN 1998-1:2004 and Annex C.

NOTE 1 Seismic isolators or other devices may be required to reduce the consequences of an earthquake.

The contractor, in consultation with the purchaser, shall determine the maximum allowable overall and differential settlements of the tank. The contractor shall demonstrate that all tank components can absorb these settlements.

The actual settlement of the tank shall be monitored during the various phases of the lifetime of the tank (construction, hydrostatic testing and operation etc.). The monitoring frequency shall be commensurate with the predicted time, and load dependent rate of change of settlement.

When the settlement behaviour, during the construction and testing of the tank is different to that predicted, the contractor shall investigate the cause and take remedial measures to prevent damage in future. The purchaser shall be consulted.

NOTE 2 When the settlement behaviour, during operation of the tank is different to that predicted, the purchaser is recommended to consult the contractor.

Frost heave of the foundation shall be avoided.

NOTE 3 This may require a heating system in the foundation.

NOTE 4 The foundation may be elevated so that a clearance is left between grade and foundation slab to permit circulation of air. In such a case the heating system may not be required. The contractor should demonstrate that sufficient air circulation will be obtained and long term condensation and ice formation on the foundation slab is prevented.

NOTE 5 For more details of the foundations; see EN 14620-3:2006, Annex B.

7.1.10 Foundation heating system

The foundation heating system shall be designed such that the temperature of the foundation shall not drop below 0 °C at any place. The layout of the conduits and the applied redundancy of the heating system shall be such that in the case of failure of one tape, or circuit, the requirement specified above shall be met.

The heating output shall be controlled by at least two temperature controllers. One controller shall be located in an area where a low temperature may be expected. All temperature controllers shall give a reading on the operator control panel together with an alarm for low temperature.

Licensed Copy: Wang Bin, na, Fri Mar 23 02:40:28 GMT+00:00 2007, Uncontrolled Copy, (c) BSI

NOTE Further information on heating systems is given in Annex D.

7.1.11 Thermal Protection System (TPS) of concrete tank

NOTE For a concrete secondary container (e.g. full containment and membrane tank), where a rigid base wall connection exist, a TPS may be required to prevent uncontrolled cracking in the base wall connection, or in the base slab. This may take place in the case of leakage of the primary container. The TPS covers the whole bottom and the lower part of the wall. The TPS may consist of steel plates (double bottom) and insulation material (double and full containment tanks) or a liquid barrier and insulation material (membrane tank).

The height of the vertical part of the TPS shall be determined based on temperature distribution and the deformation capacity of the rigid corner. The material selection and design requirements shall be in accordance with the relevant clauses of EN 14620-2 and EN 14620-4.

7.1.12 Bund wall

A single containment tank shall be used in combination with a bund wall. The dimensions of the bunded area shall be such that the full tank contents can be stored. This impounded area and the bund wall shall be designed to be permanently liquid tight. The materials used shall be resistant to the leaking product. Consideration shall be given to the removal of rainwater and firewater accumulating within the bunded area without spillage of liquid.

For concrete bund walls, the requirements of EN 14620-3:2006 shall apply.

7.1.13 Lightning

The tank shall be protected against the effects of lightning.

7.2 Protection systems

7.2.1 Instrumentation

7.2.1.1 General

The following minimum requirements shall apply:

— instrumentation shall be installed to ensure safe and reliable commissioning, operation/ maintenance and decommissioning of the tank. Sufficient redundancy shall be incorporated;

— where possible, instrumentation shall be able to be maintained during normal operation of the tank;

— measurements shall be transmitted to control room/operator.

7.2.1.2 Liquid level

At least two highly accurate, independent, level gauges shall be installed to protect the tank against overflow. Each gauge system shall include a high level alarm, a high/high level alarm and a cut out.

NOTE Because of this requirement, there is no need to design the tank for overfill.

7.2.1.3 Pressure

As a minimum, the tank shall be fitted with instruments for the detection of a too-high and too-low pressure. The systems shall operate independently of the normal pressure measurement system.

Licensed Copy: Wang Bin, na, Fri Mar 23 02:40:28 GMT+00:00 2007, Uncontrolled Copy, (c) BSI

7.2.1.4 Temperature

As a minimum, the tank shall be fitted with instruments, permanently installed and properly located, which enable the temperature to be monitored as follows:

— liquid temperature shall be measured at several depths. The vertical distance between two consecutive sensors shall not exceed 2 m;

— vapour space temperature (if applicable under and above the suspended roof);

— shell and bottom of the primary container (for control of cool-down/warming-up).

7.2.1.5 Prevention of rollover

NOTE 1 Rollover may take place when products (e.g. LNG and LPG) of different composition and density are stored in a tank.

Rollover shall be prevented by:

— application of a density measuring system so that the density can be monitored over the full liquid height. The density measuring system shall give an alarm when certain predicted values are exceeded. In such a case, measures shall be taken to prevent roll-over (e.g. mixing). The density measuring system shall operate independently of the level gauge system;

— temporary or continuous circulating system between bottom and top of the tank.

NOTE 2 Because of this requirement, there is no need to design the tank for rollover.

7.2.1.6 Fire and gas

Consideration shall be given to the installation of a fire and gas detection system.

7.2.1.7 Leak detection of primary container

A leak detection system for the primary container shall be provided. The system shall be based on one of the following systems:

— a temperature drop;

— gas detection;

— differential pressure measurement.

7.2.1.8 Insulation space monitoring system

If the insulation space is isolated from the primary container (e.g. membrane tank), an insulation space monitoring system shall be installed. The system shall:

— analyse the purging gas to detect any product vapour (leakage of the membrane);

— purge the inert gas through the insulation vapour space to ensure that during normal operation the gas concentration remain below 30 % of the lower flammable limit);

— control the differential pressure between insulation vapour space and primary containment space so that no damage can occur to the membrane. This system shall be designed ‘fail safe’.

Licensed Copy: Wang Bin, na, Fri Mar 23 02:40:28 GMT+00:00 2007, Uncontrolled Copy, (c) BSI

Licensed Copy: Wang Bin, na, Fri Mar 23 02:40:28 GMT+00:00 2007, Uncontrolled Copy, (c) BSI

7.2.2 Pressure and vacuum protection

7.2.2.1 General

Venting to atmosphere shall be excluded from tanks designed to store toxic product.

For tanks designed to store non-toxic products, sufficient margin shall be provided between the operating pressure and the design pressure of the tank to avoid unnecessary venting.

The relief capacity (pressure and vacuum) shall be designed based on normal operation and abnormal operation scenarios. Failures at interconnected facilities e.g. process plants, vent or flare systems etc. shall also be considered.

NOTE 1 Normally, the pressure and vacuum relief valves are separated from each other. However, a combination may be used.

For a full containment tank, the pressure relief system shall be designed so that it can accommodate the vapours generated due to an inner tank leakage.

NOTE 2 For the sizing of the pressure relief system, a hole of 20 mm diameter, in the first course of the shell, may be assumed.

7.2.2.2 Pressure relief valves

The number of pressure relief valves required shall be calculated based on the total product vapour outflow and set points specified. In addition, one spare valve shall be installed for maintenance purposes.

The inlet piping shall penetrate the suspended roof where applicable, thus preventing cold vapour from entering the warm space between outer roof and suspended roof under relieving conditions.

7.2.2.3 Vacuum relief valves

The number of vacuum relief valves shall be calculated based on the total air inflow and set points specified. In addition, one spare valve shall be installed for maintenance purposes.

The vacuum relief valves shall allow air to enter the vapour space located directly under the roof.

7.2.3 Fire protection

The need for a fire protection system shall be reviewed. In the review the following potential fires shall be considered:

— local fires;

— relief valve fires;

— fires at nearby installations (tanks incl.).

7.3 Actions (loadings)

7.3.1 General

The normal and accidental actions listed in 7.3.2 to 7.3.3 shall apply.

7.3.2 Normal actions

7.3.2.1 Permanent actions

Self-weight of concrete, steel and insulation components, piping, fittings, ancillaries and fixed equipment. The local effects from pre-stressing, e.g. anchorage zones and bursting stresses see EN 1992-1-1:2004.

7.3.2.2 Variable actions

7.3.2.2.1 Product load

Hydrostatic load of the product.

7.3.2.2.2 Imposed loads

Imposed loads on the roof such as:

— uniformly distributed load of 1,2 kN/m^2 over the projected fixed roof area;

NOTE 1 This load should not be combined with snow and internal negative pressure loading.

— uniformly distributed load of 2,4 kN/m^2 acting on the platforms and walkways;

— concentrated load of 5 kN, over an area of 300 mm x 300 mm, placed at any location on platforms or walkways.

NOTE 2 It is recommended that the minimum uniformly distributed load on a suspended roof should be 0,5 kN/m^2 during erection and maintenance.

NOTE 3 In locations where the ambient temperature can fall below the tank design temperature, condensation may occur at the inside of the outer tank roof. This can have an effect on the suspended roof, depending on the design of the deck and can result in the accumulation of product liquid within the annular space of certain double walled tanks.

7.3.2.2.3 Wind loads

National data or EN 1991-1-4 shall be consulted to establish an appropriate value for the wind loads.

7.3.2.2.4 Snow loads

National data shall be consulted to establish an appropriate value for the snow loads.

7.3.2.2.5 Insulation pressure

Where appropriate, both inner and outer containers shall be designed for the pressure exerted by the insulation system (perlite powder included).

7.3.2.2.6 Design internal pressure

The purchaser shall specify the design internal pressure.

7.3.2.2.7 Design internal negative pressure (vacuum)

The purchaser shall specify the design internal negative pressure.

Licensed Copy: Wang Bin, na, Fri Mar 23 02:40:28 GMT+00:00 2007, Uncontrolled Copy, (c) BSI

Licensed Copy: Wang Bin, na, Fri Mar 23 02:40:28 GMT+00:00 2007, Uncontrolled Copy, (c) BSI

7.3.2.2.8 Settlement loads

The storage tank and its foundation shall be designed to take account of the maximum total and differential foundation settlements predicted to occur during the life of the tank.

7.3.2.2.9 Pipe connections

The pipe connection loads shall be specified by the purchaser or determined by the contractor where the piping design is in his scope.

7.3.2.2.10 Loading due to construction

All possible loading cases during construction shall be considered according to EN 1991-1-6.

7.3.2.2.11 Hydrostatic and pneumatic testing

The hydrostatic and pneumatic testing shall be in accordance with EN 14620-5.

7.3.2.2.12 Thermal effects

All possible thermal effects during construction, testing, cool-down, normal and abnormal operation and warming-up shall be considered.

7.3.2.2.13 OBE earthquake

The tank (see also 7.1.4) shall be designed for the OBE ground motions.

NOTE For reference to EN 1998-1:2004, OBE is intended to be equivalent to Damage Limitation State. For reference to ENV 1998-4:1998, OBE is intended to be equivalent to serviceability (full integrity) limit state.

The OBE ground motion shall be the motion represented by 5 % damped response spectra having a 10 percent probability of being exceeded within a 50 year period (mean return interval of 475 years).

Where the structure, structural system, or component being designed warrants a damping value other than 5 % of critical, the OBE response spectra shall be adjusted accordingly applying the adjustment factor from EN 1998-1:2004, 3.2.2.2 (3). The proper damping value shall be based on:

— values for damping found in ENV 1998-4:1998, 1.4.3 shall be applied. The damping value applied for the effect of the vertical impulse actions shall be the same value applied for the effect of the horizontal impulse actions.

The damping adjustment according to EN 1998-1:2004, 3.2.2.2 (3) including soil-structure system damping shall be limited to 0,7.

The inelastic behaviour factor *q* according to ENV1998-4:1998 shall be set equal to 1.

7.3.3 Accidental actions

7.3.3.1 Leakage of the primary container

For tanks with a secondary container, this secondary container shall be designed such that it can contain the maximum liquid content of the primary container. It shall be assumed that the secondary container is filled gradually. The same philosophy shall be used for membrane containment. Beside major product spills, the consequences of a minor product spill, resulting in ‘cold spot’, shall also be investigated.

7.3.3.2 Spillage from piping components

Consideration shall be given to possible leakage of pipe flanges and valves and their effect on the tank roof or shell.

NOTE For the leakage scenario, a gasket failure may be assumed.

Areas where spillage can occur shall be designed for contact with the product liquid or protected by provision of product catchment and drainage.

7.3.3.3 SSE earthquake

The tank (see also 7.1.4) shall also be designed for the SSE ground motions.

NOTE For reference to EN 1998-1:2004 and DD ENV 1998-4:1998, SSE is intended to be equivalent to Ultimate Limit State.

The SSE ground motion shall be the motion represented by 5 % damped response spectra having a 1 % probability of being exceeded within a 50 year period (mean return interval of 4975 years), subject to the following exception:

'exception': if the ordinate of this 5 % damped probabilistic SSE response spectrum at the fundamental period (TI) of the impulsive mode of the tank-fluid-foundation system exceeds the corresponding ordinate of the deterministic SSE ground-motion spectrum of the paragraph hereunder, then the SSE ground motion shall be taken as the deterministic SSE ground motion from the paragraph hereunder.

The deterministic SSE ground motion shall be the highest of the 84th percentile, 5 % damped response spectra calculated from characteristic earthquakes on known active faults within the region. The deterministic approach is only allowed in high seismic regions along plate boundaries where the locations and characteristics of the major active faults have been determined by geologic and seismologic investigations.

Regardless of the approach used to determine the 5 % damped SSE ground-motion spectrum, this spectrum need not be greater than two times the 5 % damped OBE spectrum.

Where the structure, structural system, or component being designed warrants a damping value other than 5 % of critical, the SSE response spectra shall be adjusted accordingly applying the adjustment factor from EN 1998-1:2004, 3.2.2.2 (3). The proper damping value shall be based on:

— values for damping found in EN 1998-4:1998, 1.4.3 shall be applied. The damping value applied for the effect of the vertical impulse actions shall be the same value applied for the effect of the horizontal impulse actions;

— soil-structure interaction: for the convective (sloshing) modes, the damping ratios are essentially independent of the tank material and soil-structure interaction effects, and shall not be greater than 0,5 %.

The damping adjustment according to EN 1998-1:2004, 3.2.2.2 (3) including soil-structure system damping shall be limited to 0,63.

The inelastic behaviour factor *q* according to ENV 1998-4:1998 shall not exceed 1 unless justified in accordance with EN 1998-1:2004, and DD ENV 1998-4:1998.

7.3.3.4 External fires and explosions

The purchaser shall specify the extent of external fires and explosions.

Licensed Copy: Wang Bin, na, Fri Mar 23 02:40:28 GMT+00:00 2007, Uncontrolled Copy, (c) BSI

7.3.4 Action combinations

The normal actions listed above shall be combined in accordance with EN 1991-1 such that all possible combinations, which can occur during construction, testing, cool down, normal operation and warming-up of the tanks, are incorporated in the design. Only one accidental action shall be combined with the appropriate combination of normal actions in any one-load case.

8 Inspection and maintenance

The contractor shall indicate critical items that may require further attention in future so that the inspection and maintenance program of the tank shall be prepared accordingly.

Licensed Copy: Wang Bin, na, Fri Mar 23 02:40:28 GMT+00:00 2007, Uncontrolled Copy, (c) BSI

Annex A
(informative)

Physical properties of gases

Liquefied gases can be defined as products for which the temperature of the boiling point at atmospheric pressure is below 0 °C.

Table A.1 gives the main physical constants of pure products most commonly encountered. The purchaser should specify the properties of the gases to be stored.

Table A.1 — Physical properties of pure gases

Name	Chemical formula	Mol. mass g/mol	Boiling point °C	Latent heat of vapour at boiling point kJ/kg	Liquid density at boiling point kg/m^3	Gas density at boiling point $kg/m^3.10^{-8}$	Vol. of gas liberated by 1 m^3 of liquid (exp. to 15 °C at 1 bar) m^3
N-Butane	C_4H_{10}	58 123	- 0,5	385	601	270	239
Iso- Butane	C_4H_{10}	58 123	- 11,7	366	593	282	236
Ammonia	NH_3	17 030	- 33,3	1367	682	905	910
Butadiene	C_4H_6	54 091	- 4,5	417	650	255	279
Propane	C_3H_8	44 096	- 42,0	425	582	242	311
Propylene	C_3H_6	42 080	- 47,7	437	613	236	388
Ethane	C_2H_6	30 069	- 88,6	487	546	205	432
Ethylene	C_2H_4	28 054	- 103,7	482	567	208	482
Methane	CH_4	16 043	- 161,5	509	422	181	630

NOTE 1 Commercial butane is a mixture in N-Butane and isobutane with small content of propane and pentane.

NOTE 2 Commercial propane is propane with small content of ethane and butane.

Licensed Copy: Wang Bin, na, Fri Mar 23 02:40:28 GMT+00:00 2007, Uncontrolled Copy, (c) BSI

Annex B
(normative)

Design information

Licensed Copy: Wang Bin, na, Fri Mar 23 02:40:28 GMT+00:00 2007, Uncontrolled Copy, (c) BSI

B.1 Information to be specified by the purchaser

The purchaser shall specify the following design data:

— scope of work (pre-commissioning, drying, purging and cool-down incl.);

— tank type;

— design and set pressures;

— filling/emptying rates;

— accidental actions (e.g. spillage, fires and explosions);

— design lifetime;

— location of the tank with plot plan;

— tank capacity (net or gross);

— environmental data (incl. ambient, minimum/maximum temperatures);

— Process Flow Diagrams (PFD's), Process & Instrumentation Diagrams (P & ID's);

— design metal temperature of primary container;

— relevant properties of the contained fluid, including relative density, temperature, toxicity, flammability;

— provisions to prevent rollover (install density meter, apply continuous circulation of product);

— permissible boil-off rate and ambient conditions;

— design internal positive and negative pressures;

— maximum normal operating level;

— pressure and vacuum relief design data (flow rates);

— certain actions like: earthquake, wind, blast, impact, fire, connected piping / nozzle loading;

— piping and instrumentation requirements.

NOTE The site specific geotechnical and seismic data may also be provided by the purchaser. However, in view of contractors responsibility, additional data may be required.

B.2 Information to be agreed between the purchaser and the contractor

The following items shall be agreed between the purchaser and the contractor:

— contractors' assistance for the risk assessment;

— identification of applicable local or national laws and legislation;

— consequences of leakage scenarios;

— maximum allowable purging rate of the insulation monitoring system (membrane tanks);

— commissioning procedures;

— predicted settlements of the tank and future inspections to be carried out.

Licensed Copy: Wang Bin, na, Fri Mar 23 02:40:28 GMT+00:00 2007, Uncontrolled Copy, (c) BSI

Annex C
(normative)

Seismic analysis

Licensed Copy: Wang Bin, na, Fri Mar 23 02:40:28 GMT+00:00 2007, Uncontrolled Copy, (c) BSI

C.1 General

One of the following methodologies shall be applied:

— static design;

— dynamic design.

NOTE 1 For a peak ground acceleration up to 0,05 g, both methods may be used. For a larger peak ground acceleration, the dynamic design method is recommended.

For OBE-conditions, the tank design shall ensure that operability during and after seismic events is maintained.

For SSE-conditions:

— for single, double and full containment tanks, the liquid shall be contained by the primary liquid container. The calculated sloshing wave height shall not exceed the freeboard above the maximum normal operating level;

— for membrane tanks, the liquid shall be contained by the membrane or the concrete outer tank, including the bottom/corner protection system.

NOTE 2 In cases where the limit state theory is used, this may be done in combination with adjusted partial safety factors. In case the allowable stress theory is used, the allowable stresses may be increased.

C.2 Analysis of the tank structure

For static analysis of the tank, EN 1998-1:2004, 4.3.3.2 (lateral force method of analysis) shall be used.

For the dynamic design method, reference shall be made to ENV 1998-4:1998.

For high seismic locations it may be necessary to apply more advanced approaches such as modal response spectra analysis, and non-linear methods including time history analysis as defined by EN 1998-1:2004, 4.3.3.3 and 4.3.3.4.

C.3 Modelling of the tank structure and fluid

When the fluid pressure acts directly to the tank structure, the dynamic analysis of the tank structure shall be done on the basis of calculation models that include the natural frequency and vibration mode of the tank, as well as the natural frequencies and vibration modes of the fluid (convective and impulsive horizontal modes and impulsive vertical modes). For all relevant vibration modes, horizontal and vertical forces and overturning moments of the tank shall be calculated.

NOTE 1 For guidance of modelling and analysis, the EN 1998-1:2004 and ENV 1998-4:1998 should be used.

NOTE 2 The dynamic response may be calculated on the basis of a summation of the response of single degree of freedom systems, that take into account a single vibration mode of tank and/or fluid, or may be calculated by using finite element models of tank and fluid, including fluid structure interaction. For the single degree of freedom models and their properties, including damping, reference is made to ENV 1998-4:1998. The response may be calculated by using direct time integration techniques or mode superposition techniques.

C.4 Response of the tank structure

C.4.1 General

The response of the tank shall be calculated for the horizontal and vertical forces caused by the seismic event, for OBE and SSE separately.

The following response parameters shall be calculated:

- .the height of the fluid waves due to the first convective mode of vibration;
- .in the parts of the tank shell, that are directly or indirectly loaded by the self weight of the fluid and by the hydrodynamic fluid pressures as a result of convective, impulsive modes and breathing modes:
  - .the hoop stress;
  - .the shear stress;
  - .the longitudinal stress.

In the parts of the tank base that are directly or indirectly loaded by the self weight of the fluid and by the hydrodynamic fluid pressures as a result of convective or impulsive modes (horizontal) and breathing mode (vertical):

- .the shear stress;
- .the normal stress.

C.4.2 Seismic isolation

Seismic isolators shall be inspectable. The need for exchangeability shall be considered. Seismic isolators shall be effective and undamaged during and after an OBE seismic event. For SSE seismic events, damage as a result of the event shall be allowed, as far as its effectiveness is not significantly restricted.

NOTE 1 Seismic isolation may be applied to influence the dynamic characteristics of the horizontal and/or vertical vibrations modes of the tank structure.

NOTE 2 Attention should be paid to the possible interaction with the sloshing modes (e.g. second and third order) and the impulsive and convective response of the structure.

C.5 Acceptance criteria and limits (non-membrane tanks)

C.5.1 For OBE

The following criteria and limits shall apply:

— tank shall have sufficient freeboard, to prevent both spillage and any contact with the suspended-deck due to sloshing waves. For calculating the height of sloshing waves in tanks, see ENV 1998-4:1998.

— horizontal sliding of the tank shall not be allowed. A safety factor of 1,5 shall be applied.

Licensed Copy: Wang Bin, na, Fri Mar 23 02:40:28 GMT+00:00 2007, Uncontrolled Copy, (c) BSI

C.5.2 For SSE

The following criteria and limits shall apply:

— for an unanchored tank, the maximum width (measured in radial direction) of the tank considered to uplift for determining resisting force is 7 % of the tank radius;

— horizontal sliding of the tank is not allowed. Friction factors shall be based on literature or testing. A safety factor of 1,0 shall be applied.

C.6 Vertical anchors (non membrane tanks)

The necessity for vertically anchoring the tank structure shall be evaluated on the basis of the overturning stability of the tank, internal pressure induced uplift forces, and limits on the uplift of the annular plate. Vertical anchors and their shell attachment shall be designed to resist all vertical shell loads due to internal pressure and seismic or wind effects and to transfer these loads to the foundation. Anchors and their attachments shall be designed to accommodate differential thermal radial movements. For normal elastic design, embedments and attachments shall be designed for the force to initiate yielding of the anchor.

Licensed Copy: Wang Bin, na, Fri Mar 23 02:40:28 GMT+00:00 2007, Uncontrolled Copy, (c) BSI

Annex D
(informative)

Tank heating system

If the soil under the tank is allowed to become too cold, frost penetrates into the ground, ice lenses form in the soil (mainly in fine grained soils), and the growth of these ice lenses results in high expansion forces which lift and damage the tank or parts of the tank (e.g. the tank bottom connection). To prevent this, the heating system needs to operate in the foundation.

If a self-regulating on-off heating system is used, an automatic on/off switch system should activate the heating system and ensure that the tank foundation, at its coldest location, is within a temperature range of +5 °C to +10 °C. Other areas of the tank foundation may have a higher temperature.

Alternatively, a constant wattage heating system may be used that will maintain the tank foundation at its coldest location at a temperature of 5 °C with a ‘dead band’ of 1 °C.

The temperature of the whole heating system should be monitored. Typically, the set-point for the "low temperature alarm" is 0 °C and for the "high temperature alarm" + 50 °C.

Frequent monitoring of the heating system performance is essential because it provides the first indication of a tank leak. In the event of a leak, the controller located near this leak shows a sudden temperature drop. Daily recording of the controller readings is therefore recommended.

Another indication of an abnormal situation, when a self-regulating system is used, is a change in duty cycle or heating power consumption. This produces a change in on-off time. Normally the heating system is activated 40 % to 60 % of the operating time and a sudden change to 100 % activation would indicate that there is something wrong with the system, or that a leak is present. It is recommended that a daily record be maintained of whether the heating is activated or not, see Figure D.1.

Licensed Copy: Wang Bin, na, Fri Mar 23 02:40:28 GMT+00:00 2007, Uncontrolled Copy, (c) BSI

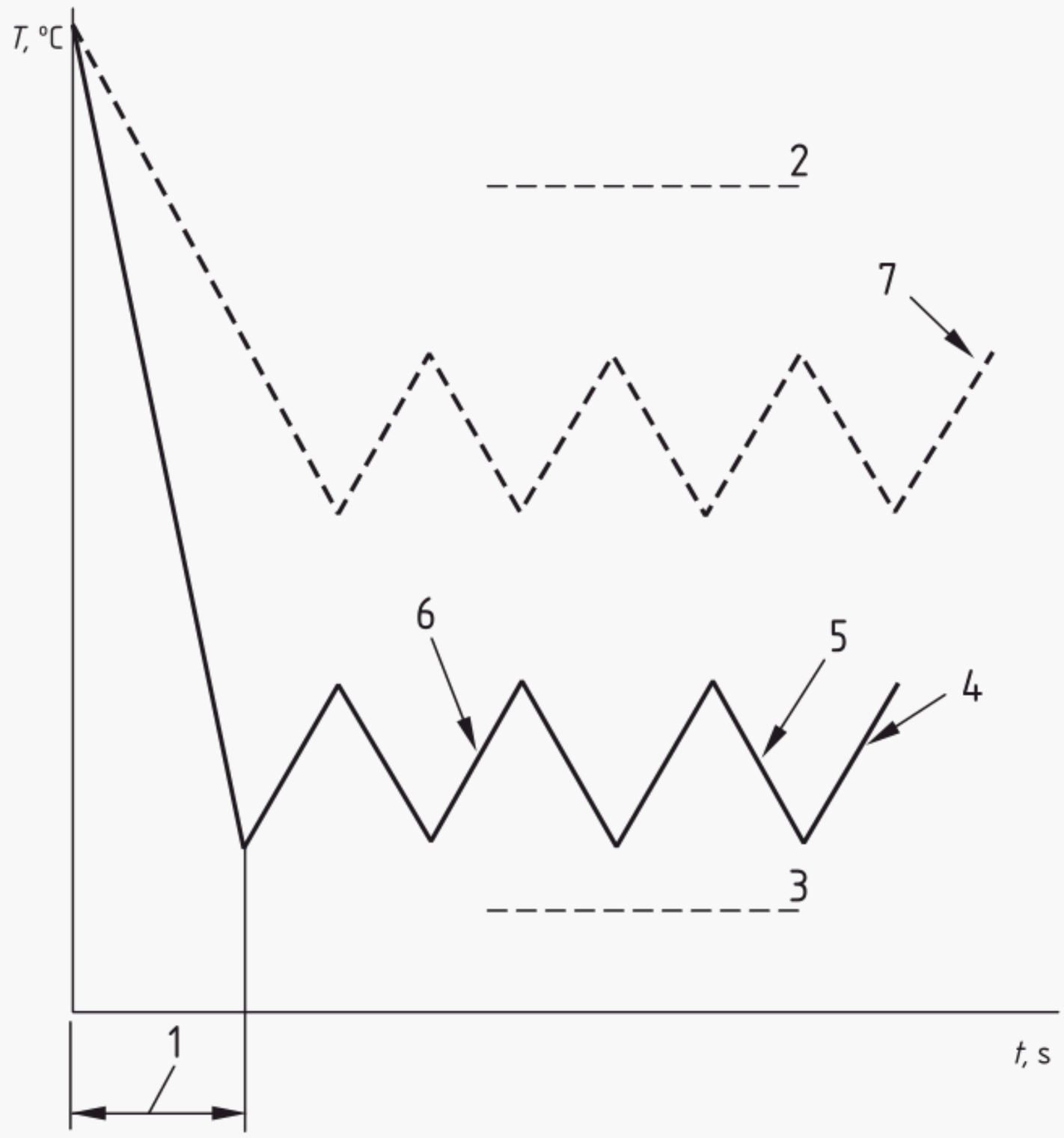

Key

1 cool down period
2 alarm set level (high temperature)
3 alarm set level (low temperature)
4 controlling sensor
5 heating off
6 heating on
7 other sensor

Figure D.1 — Typical heating time recording curve

Licensed Copy: Wang Bin, na, Fri Mar 23 02:40:28 GMT+00:00 2007, Uncontrolled Copy, (c) BSI

Bibliography

[1] EN 1998-5, *Eurocode 8 - Design of structures for earthquake resistance — Part 5: Foundations, retaining structures and geotechnical aspects*

[2] EN 1473, *Installation and equipment for liquefied natural gas — Design of onshore installations*

[3] EN 13445-1:2002, *Unfired pressure vessels — Part 1: General*

[4] EN 13445-2:2002, *Unfired pressure vessels — Part 2: Materials*

[5] EN 13445-3:2002, *Unfired pressure vessels — Part 3: Design*

[6] EN 13445-4:2002, *Unfired pressure vessels — Part 4: Fabrication*

[7] EN 13445-5:2002, *Unfired pressure vessels — Part 5: Inspection and testing*

[8] EN ISO 9001, *Quality management systems — Requirements (ISO 9001:2000)*

[9] EN 1991-1-1, *Eurocode 1: Actions on structures — Part 1-1: General actions — Densities, self-weight, imposed loads for buildings*

[10] EN 1991-1-2, *Eurocode 1: Actions on structures — Part 1-2: General actions - Actions on structures exposed to fire*

[11] EN 1991-1-3, *Eurocode 1: Actions on structures — Part 1-3: General actions - Snow loads*

[12] EN 1991-1-5, *Eurocode 1: Actions on structures — Part 1-5: General actions - Thermal actions*

Licensed Copy: Wang Bin, na, Fri Mar 23 02:40:28 GMT+00:00 2007, Uncontrolled Copy, (c) BSI

Licensed Copy: Wang Bin, na, Fri Mar 23 02:40:28 GMT+00:00 2007, Uncontrolled Copy, (c) BSI

blank

BSI — British Standards Institution

BSI is the independent national body responsible for preparing British Standards. It presents the UK view on standards in Europe and at the international level. It is incorporated by Royal Charter.

Revisions

British Standards are updated by amendment or revision. Users of British Standards should make sure that they possess the latest amendments or editions.

It is the constant aim of BSI to improve the quality of our products and services. We would be grateful if anyone finding an inaccuracy or ambiguity while using this British Standard would inform the Secretary of the technical committee responsible, the identity of which can be found on the inside front cover. Tel: +44 (0)20 8996 9000. Fax: +44 (0)20 8996 7400.

BSI offers members an individual updating service called PLUS which ensures that subscribers automatically receive the latest editions of standards.

Buying standards

Orders for all BSI, international and foreign standards publications should be addressed to Customer Services. Tel: +44 (0)20 8996 9001. Fax: +44 (0)20 8996 7001. Email: orders@bsi-global.com. Standards are also available from the BSI website at http://www.bsi-global.com.

In response to orders for international standards, it is BSI policy to supply the BSI implementation of those that have been published as British Standards, unless otherwise requested.

Information on standards

BSI provides a wide range of information on national, European and international standards through its Library and its Technical Help to Exporters Service. Various BSI electronic information services are also available which give details on all its products and services. Contact the Information Centre. Tel: +44 (0)20 8996 7111. Fax: +44 (0)20 8996 7048. Email: info@bsi-global.com.

Subscribing members of BSI are kept up to date with standards developments and receive substantial discounts on the purchase price of standards. For details of these and other benefits contact Membership Administration. Tel: +44 (0)20 8996 7002. Fax: +44 (0)20 8996 7001. Email: membership@bsi-global.com.

Information regarding online access to British Standards via British Standards Online can be found at http://www.bsi-global.com/bsonline.

Further information about BSI is available on the BSI website at http://www.bsi-global.com.

Copyright

Copyright subsists in all BSI publications. BSI also holds the copyright, in the UK, of the publications of the international standardization bodies. Except as permitted under the Copyright, Designs and Patents Act 1988 no extract may be reproduced, stored in a retrieval system or transmitted in any form or by any means – electronic, photocopying, recording or otherwise – without prior written permission from BSI.

This does not preclude the free use, in the course of implementing the standard, of necessary details such as symbols, and size, type or grade designations. If these details are to be used for any other purpose than implementation then the prior written permission of BSI must be obtained.

Details and advice can be obtained from the Copyright & Licensing Manager. Tel: +44 (0)20 8996 7070. Fax: +44 (0)20 8996 7553. Email: copyright@bsi-global.com.

BSI
389 Chiswick High Road
London
W4 4AL

Licensed Copy: Wang Bin, na, Fri Mar 23 02:40:28 GMT+00:00 2007, Uncontrolled Copy, (c) BSI