BS EN 15947-4:2015

BSI Standards Publication

Pyrotechnic articles — Fireworks, Categories F1, F2 and F3

Part 4: Test methods

bsi.

...making excellence a habit.™

National foreword

This British Standard is the UK implementation of EN 15947-4:2015. It supersedes BS EN 15947-4:2010 which is withdrawn.

The UK participation in its preparation was entrusted to Technical Committee CII/47, Pyrotechnic articles.

A list of organizations represented on this committee can be obtained on request to its secretary.

This publication does not purport to include all the necessary provisions of a contract. Users are responsible for its correct application.

© The British Standards Institution 2016.
Published by BSI Standards Limited 2016

ISBN 978 0 580 87073 6

ICS 71.100.30

Compliance with a British Standard cannot confer immunity from legal obligations.

This British Standard was published under the authority of the Standards Policy and Strategy Committee on 31 March 2016.

Amendments/corrigenda issued since publication

Date	Text affected

EUROPEAN STANDARD

NORME EUROPÉENNE

EUROPÄISCHE NORM

EN 15947-4

December 2015

ICS 71.100.30

Supersedes EN 15947-4:2010

English Version

Pyrotechnic articles - Fireworks, Categories F1, F2 and F3 - Part 4: Test methods

Articles pyrotechniques - Artifices de divertissement, Catégories F1, F2 et F3 - Partie 4: Méthodes d'essai

Pyrotechnische Gegenstände - Feuerwerkskörper, Kategorien F1, F2 und F3 - Teil 4: Prüfverfahren

This European Standard was approved by CEN on 26 September 2015.

CEN members are bound to comply with the CEN/CENELEC Internal Regulations which stipulate the conditions for giving this European Standard the status of a national standard without any alteration. Up-to-date lists and bibliographical references concerning such national standards may be obtained on application to the CEN-CENELEC Management Centre or to any CEN member.

This European Standard exists in three official versions (English, French, German). A version in any other language made by translation under the responsibility of a CEN member into its own language and notified to the CEN-CENELEC Management Centre has the same status as the official versions.

CEN members are the national standards bodies of Austria, Belgium, Bulgaria, Croatia, Cyprus, Czech Republic, Denmark, Estonia, Finland, Former Yugoslav Republic of Macedonia, France, Germany, Greece, Hungary, Iceland, Ireland, Italy, Latvia, Lithuania, Luxembourg, Malta, Netherlands, Norway, Poland, Portugal, Romania, Slovakia, Slovenia, Spain, Sweden, Switzerland, Turkey and United Kingdom.

EUROPEAN COMMITTEE FOR STANDARDIZATION
COMITÉ EUROPÉEN DE NORMALISATION
EUROPÄISCHES KOMITEE FÜR NORMUNG

CEN-CENELEC Management Centre: Avenue Marnix 17, B-1000 Brussels

© 2015 CEN All rights of exploitation in any form and by any means reserved worldwide for CEN national Members.

Ref. No. EN 15947-4:2015 E

Contents

Page

European foreword 4
1 Scope 5
2 Normative references 5
3 Terms and definitions 5
4 Test environment 5
4.1 General 5
4.2 Indoor 6
4.3 Outdoor 6
4.3.1 General 6
4.3.2 Category F1 6
4.3.3 Category F2 6
4.3.4 Category F3 6
4.4 Monitoring height 6
5 Apparatus 6
6 Methods of tests 12
6.1 Construction and stability 12
6.1.1 Length of handle 12
6.1.2 Attachment of separate handle 12
6.1.3 Length of item 13
6.1.4 Length of pull-string or pull-strip 13
6.1.5 Determination of diameter 13
6.1.6 Attachment of initial fuse 13
6.1.7 Attachment of sealing paper, ignition head or friction head 14
6.1.8 Resistance to ignition by an abrasive surface 14
6.1.9 Height of initial fuse for mounted wheels in category F3 14
6.2 Design – Verification 14
6.2.1 General 14
6.2.2 Conformity to drawings and part lists 14
6.2.3 Pyrotechnic composition – Determination of net explosive content 14
6.3 Paper tests 15
6.3.1 Test for burning or incandescent matter 15
6.3.2 Test for horizontal projected debris 16
6.3.3 Test for vertical projected debris 18
6.4 Angle of ascent and height of effects 19
6.4.1 Apparatus 19
6.4.2 Procedure for double bangers 20
6.4.3 Procedure for items other than double bangers 20
6.5 Measurement of sound pressure level 20
6.5.1 General measurement for outdoors 20
6.5.2 Party poppers for indoors 21
6.5.3 Christmas crackers and snaps for indoors 21
6.6 Timing measurement 22
6.6.1 Apparatus 22

6.6.2 Procedure **23**
6.7 Measuring of labelling. **23**
6.7.1 Apparatus **23**
6.7.2 Procedure **23**
6.8 Extinguishing of flames **23**
6.8.1 Apparatus **23**
6.8.2 Procedure **23**
6.9 Burning rate of composition **24**
6.9.1 Apparatus **24**
6.9.2 Procedure **24**
6.10 Droop test **24**
6.10.1 Apparatus **24**
6.10.2 Procedure **24**
6.11 Projected debris (outdoor) **24**
6.11.1 Apparatus **24**
6.11.2 Procedure **24**
6.12 Incandescent matter. **24**
6.13 Visual and audible examinations **24**
6.14 Mechanical conditioning. **25**
6.14.1 Apparatus **25**
6.14.2 Procedure **25**
6.15 Thermal conditioning **25**
6.15.1 Apparatus **25**
6.15.2 Procedure (option 1) **26**
6.15.3 Procedure (option 2) **26**
6.16 Striking surface test. **26**
6.16.1 Apparatus **26**
6.16.2 Procedure **26**
6.17 Function test. **26**
6.17.1 Apparatus **26**
6.17.2 Procedure **26**
6.18 Determination of tube angle. **27**
6.18.1 Apparatus **27**
6.18.2 Procedure **27**

Annex A (informative) **Mechanical conditioning (shock apparatus)** **28**

Annex B (informative) **Determination of silver fulminate** **34**

Annex ZA (informative) **Relationship between this European Standard and the Essential Requirements of EU Directive 2013/29/EU on the harmonization of the laws of the Member States relating to the making available on the market of pyrotechnic articles** **36**

Bibliography **37**

European foreword

This document (EN 15947-4:2015) has been prepared by Technical Committee CEN/TC 212 "Pyrotechnic articles", the secretariat of which is held by NEN.

This European Standard shall be given the status of a national standard, either by publication of an identical text or by endorsement, at the latest by June 2016, and conflicting national standards shall be withdrawn at the latest by June 2016.

Attention is drawn to the possibility that some of the elements of this document may be the subject of patent rights. CEN [and/or CENELEC] shall not be held responsible for identifying any or all such patent rights.

This document supersedes EN 15947-4:2010.

This document has been prepared under a mandate given to CEN by the European Commission and the European Free Trade Association, and supports essential requirements of EU Directive(s).

For relationship with EU Directive(s), see informative Annex ZA, which is an integral part of this document.

— EN 15947-1, *Pyrotechnic articles — Fireworks, Categories F1, F2 and F3 — Part 1: Terminology;*

— EN 15947-2, *Pyrotechnic articles — Fireworks, Categories F1, F2 and F3 — Part 2: Categories and types of firework;*

— EN 15947-3, *Pyrotechnic articles — Fireworks, Categories F1, F2 and F3 — Part 3: Minimum labelling requirements;*

— EN 15947-4, *Pyrotechnic articles — Fireworks, Categories F1, F2 and F3 — Part 4: Test methods;*

— EN 15947-5, *Pyrotechnic articles — Fireworks, Categories F1, F2 and F3 — Part 5: Requirements for construction and performance.*

According to the CEN-CENELEC Internal Regulations, the national standards organizations of the following countries are bound to implement this European Standard: Austria, Belgium, Bulgaria, Croatia, Cyprus, Czech Republic, Denmark, Estonia, Finland, Former Yugoslav Republic of Macedonia, France, Germany, Greece, Hungary, Iceland, Ireland, Italy, Latvia, Lithuania, Luxembourg, Malta, Netherlands, Norway, Poland, Portugal, Romania, Slovakia, Slovenia, Spain, Sweden, Switzerland, Turkey and the United Kingdom.

1 Scope

This European Standard specifies test methods. It is applicable to fireworks in categories F1, F2 and F3 according to EN 15947-2:2015.

2 Normative references

The following documents, in whole or in part, are normatively referenced in this document and are indispensable for its application. For dated references, only the edition cited applies. For undated references, the latest edition of the referenced document (including any amendments) applies.

EN 15947-1:2015, *Pyrotechnic articles — Fireworks, Categories F1, F2 and F3 — Part 1: Terminology*

EN 15947-3:2015, *Pyrotechnic articles — Fireworks, Categories F1, F2 and F3 — Part 3: Minimum labelling requirements*

EN 15947-5:2015, *Pyrotechnic articles — Fireworks, Categories F1, F2 and F3 — Part 5: Requirements for construction and performance*

EN 61672-1:2013, *Electroacoustics — Sound level meters — Part 1: Specifications (IEC 61672-1)*

EN ISO 845, *Cellular plastics and rubbers - Determination of apparent density (ISO 845)*

EN ISO 868, *Plastics and ebonite - Determination of indentation hardness by means of a durometer (Shore hardness) (ISO 868)*

EN ISO 2439, *Flexible cellular polymeric materials - Determination of hardness (indentation technique) (ISO 2439)*

ISO 13385-1, *Geometrical product specifications (GPS) — Dimensional measuring equipment — Part 1: Callipers; Design and metrological characteristics*

ISO 6344-3, *Coated abrasives — Grain size analysis — Part 3: Determination of grain size distribution of microgrits P240 to P2500*

ISO 21948, *Coated abrasives — Plain sheets*

3 Terms and definitions

For the purposes of this document, the terms and definitions given in EN 15947-1:2015 apply.

4 Test environment

4.1 General

The test area shall be a clean, flat, horizontal, non-flammable and sound reflecting surface (for example concrete). The test sample shall be placed in accordance with the instructions on the label in the centre of the test area.

4.2 Indoor

The test area shall be indoors.

The test area shall be inside a fume cupboard, or similar enclosed space, which is capable of preventing movement of air.

4.3 Outdoor

4.3.1 General

The test area shall be an outdoor site. If applicable, provisions shall be made at the centre of the test area for partially burying into the ground.

If applicable, insert support pole in the centre of the test area.

A means of measuring the wind speed at a height of 1,5 m above the ground shall be provided. No performance testing shall be carried out if the wind speed exceeds 5,0 m/s.

4.3.2 Category F1

A test area meeting the requirements given in 4.1, with a radius of at least 2,0 m and a circle, radius 1,0 m, shall be marked around the centre of the test area.

4.3.3 Category F2

A test area meeting the requirements given in 4.1, with a radius of at least 9,0 m and a circle, radius 8,0 m, shall be marked around the centre of the test area.

4.3.4 Category F3

A test area meeting the requirements given in 4.1, with a radius of at least 16,0 m and a circle, radius 15,0 m, shall be marked around the centre of the test area.

4.4 Monitoring height

Two positions for monitoring the height of ascent and angle of flight shall be provided, at a measured distance of at least 50 m from and at an angle of 90° to each other in relation to the testing point. If the monitoring positions are not in the same horizontal plane, appropriate corrections shall be made in the calculation of heights.

If necessary the measuring distance and the number of positions may be adapted to the firework.

5 Apparatus

NOTE The described apparatuses are only examples, any equivalent apparatus with the same accuracy or better can be used.

5.1 Timing device.

5.1.1 Timing device, capable of being read to the nearest 0,1 s.

5.1.2 Timing device, capable of being read to the nearest 1 min.

5.2 Calliper, flat faced vernier calliper reading to 0,1 mm, conforming to ISO 13385-1.

5.3 Ruler, reading to 1 mm.

5.4 Measuring tape, reading to 10 mm.

5.5 Wind speed meter, capable to measure with accuracy of at least 0,5 m/s.

5.6 Masses with clamping device.

5.6.1 (50 ± 1,0) g mass total.

5.6.2 (100 ± 1,0) g mass total.

5.6.3 (500 ± 1,0) g mass total.

5.7 Balance.

5.7.1 Balance, reading to 100 mg.

5.7.2 Balance, reading to 10 mg.

5.7.3 Balance, reading to 0,1 mg.

5.8 Abrasive sheet, large enough to permit striking of the ignition head, conforming to ISO 21948, grit P240 measured in accordance with ISO 6344-3.

5.9 Temperature chamber.

5.9.1 Up to (+ 130 ± 2,5) °C.

5.9.2 Up to (+ 75 ± 2,5) °C.

5.9.3 Up to (+ 50 ± 2,5) °C.

5.10 Test paper, 700 mm × 750 mm, (80 ± 3,0) g/m^2.

5.11 Clamping device.

Means of clamping to hold different test sample at different heights and/or angles.

5.12 Plate, non-flammable, with a diameter of (200 ± 5) mm.

5.13 Paper holder.

Means of clamping to fix the test paper in a horizontal or vertical plane in different heights.

5.14 Viewing screen.

Suitable viewing screens, as shown in Figure 1, shall be provided for monitoring height and angle of flight criteria.

Dimensions in millimetres

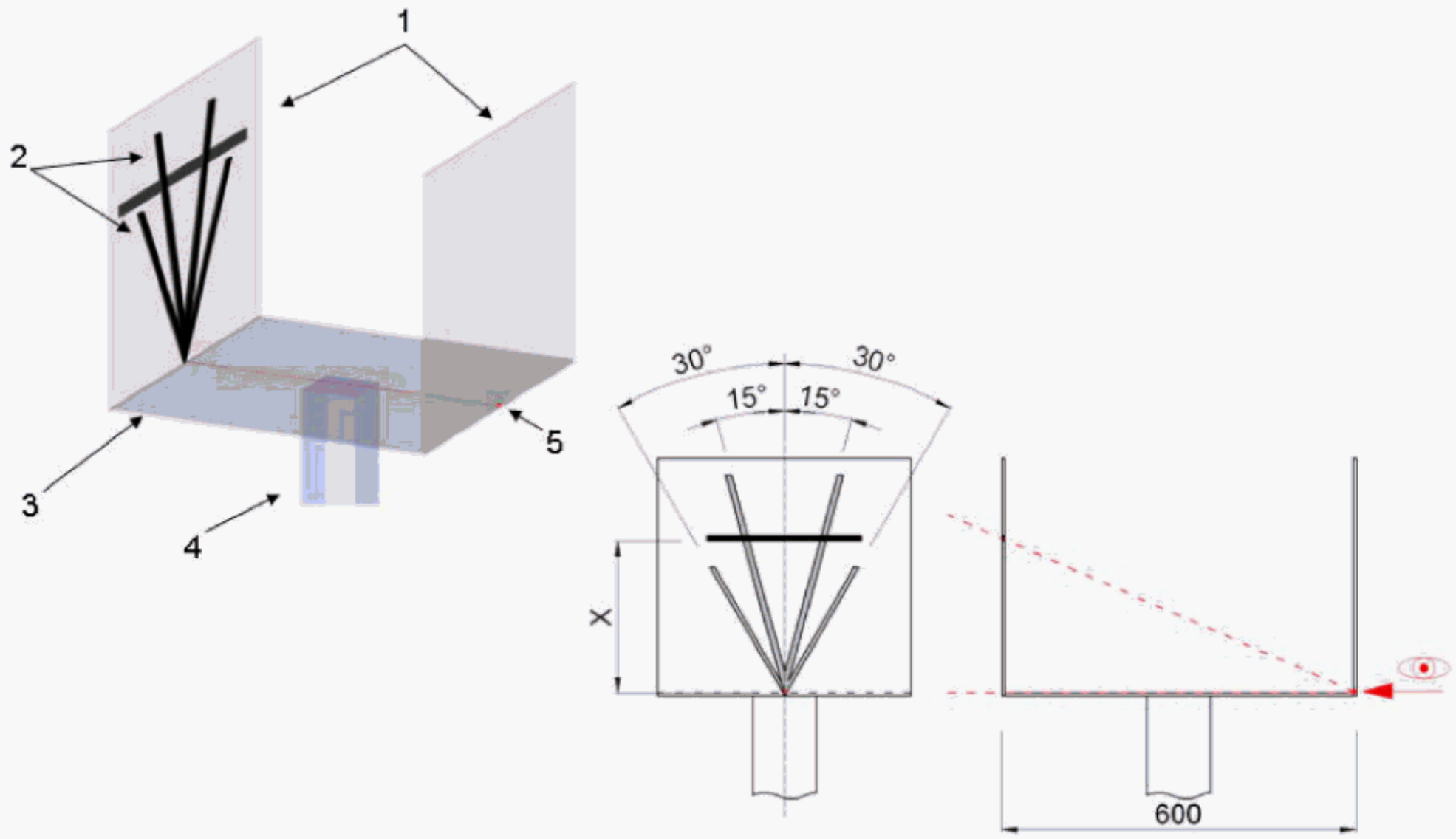

Key

1 position of observer

Figure 1 — Viewing screen

The distance X in Figure 1 is given in metres by the Formula (1):

$$\frac{20\,\mathrm{m}}{X} = \frac{Y}{0{,}6\,\mathrm{m}} \tag{1}$$

where

Y is the distance in metres from the viewing point to the testing point.

EXAMPLE Y = 50 m.

$$X = \frac{0{,}6\,\mathrm{m} \cdot 20\,\mathrm{m}}{Y} = \frac{0{,}6\,\mathrm{m} \cdot 20\,\mathrm{m}}{50\,\mathrm{m}} = 0{,}24\,\mathrm{m}$$

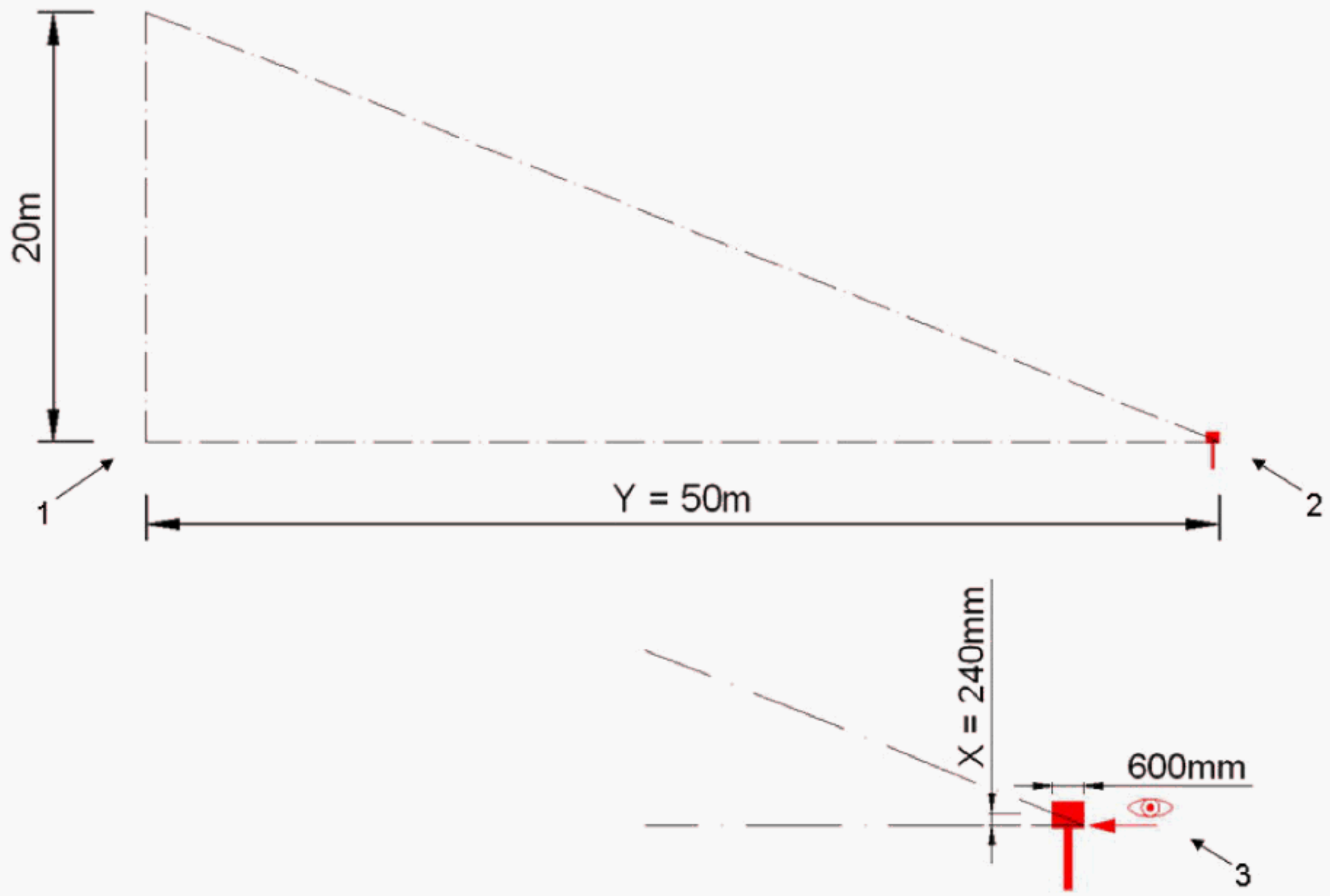

Key

1

position of observer

Figure 2 — Use of a viewing screen to monitor a height of 20 m

5.15 Poles, with 3 m height.

NOTE A vertical height of 3 m can be identified by the poles placed around the perimeter of the test area and the 8 m height can be estimated using the same poles.

5.16 Rack.

Horizontal plate with a central hole of 800 mm diameter, mounted in a height of 3,0 m above the ground in a mobile rack.

5.17 Sound level meter to class 1 of EN 61672-1:2013 with free-field microphone.

5.18 Shock apparatus, shall provide a deceleration of 490^{+100}_{-50} m/s² (when measured at the centre of an unloaded platform) and the mechanical conditioning impulse duration (time elapsed from the starting of the machine's deceleration to the time in which the deceleration reaches its maximum value during each first shock pulse) shall be 2 ms ± 1 ms working at a frequency of 1 Hz ± 0,1 Hz.

An example of an apparatus is shown in Annex A.

5.19 Goniometer, read to 1°.

5.20 Frame.

The frame shall retain the test sample consistently.

To gauge the length of the handles, clearly marked lines shall be marked at distances of 20 mm, 40 mm and 75 mm from the handle end of the frame.

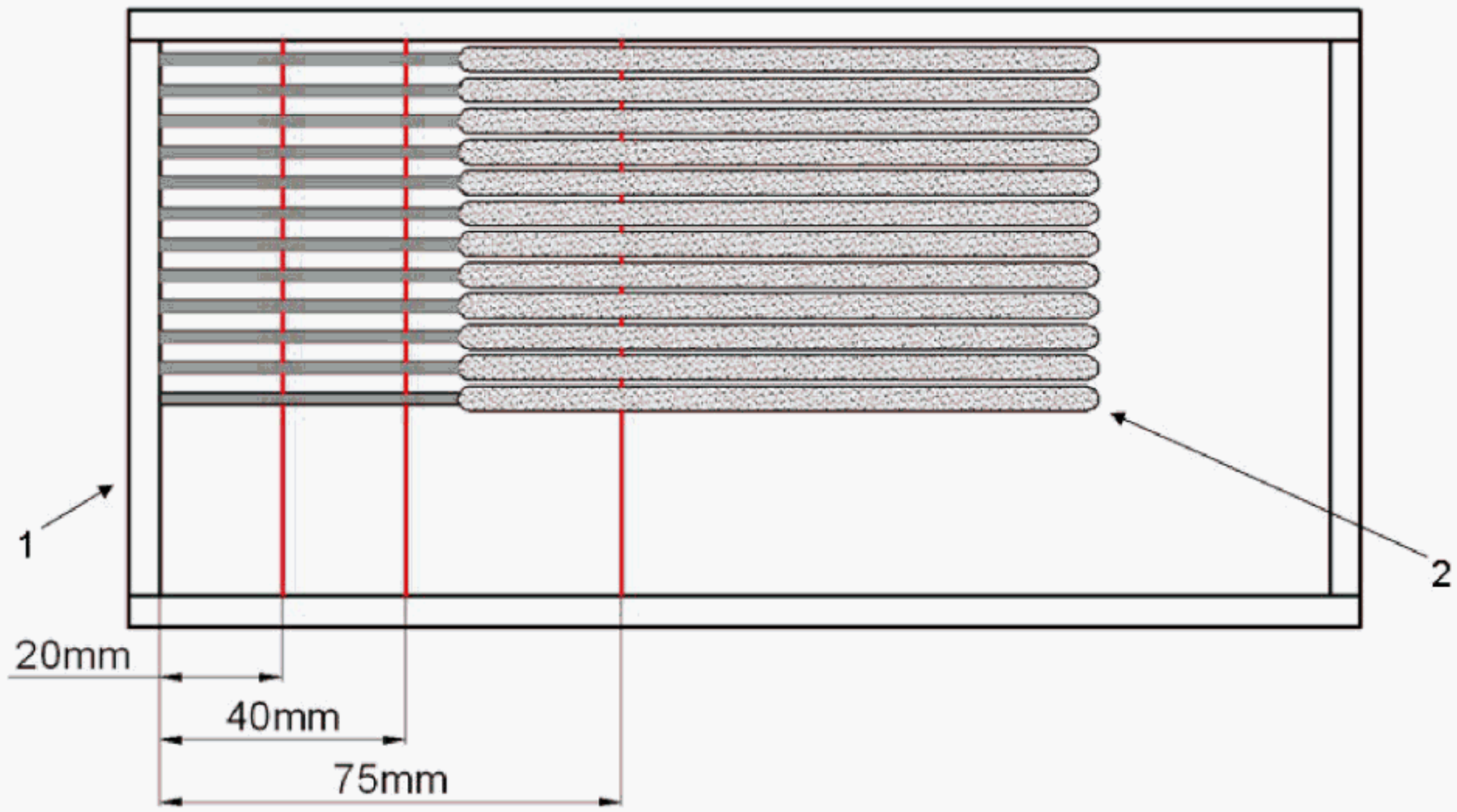

Key

1

2 sparkler

Figure 3 — Example for determining length of handles (Batch test)

5.21 Ignition source, capable of producing a small flame or of smouldering.

5.22 Transparent type size sheet.

The printing, as required in EN 15947-3:2015, 4.8, shall comply with the sizes shown in the figure below.

2,8 mm: ABC abc XYZ xyz 123

2,1 mm: ABC abc XYZ xyz 123

Figure 4 — Type sizes of print

5.23 Protractor.

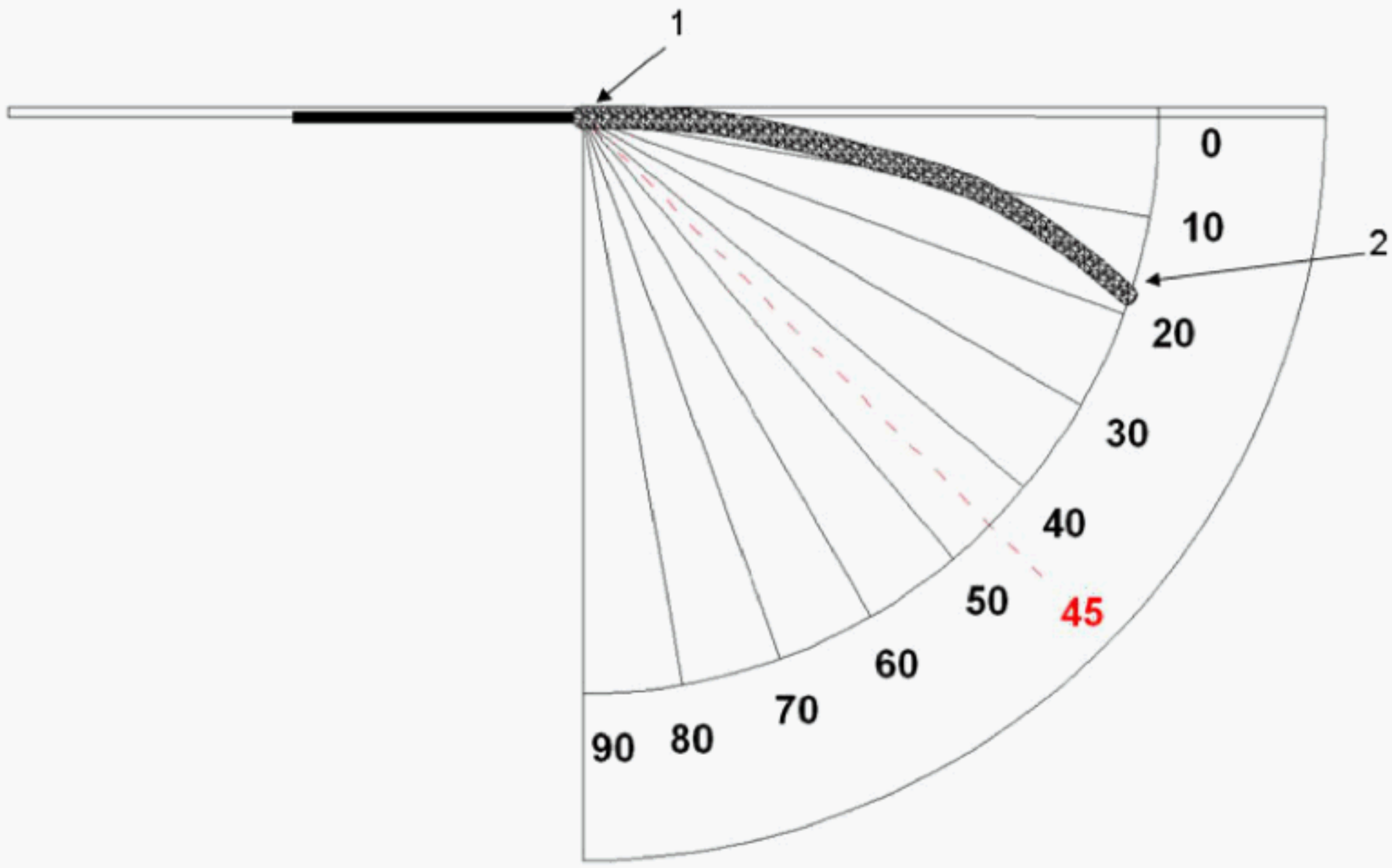

Key

1 tip of hand-held sparkler

Figure 5 — Measurement of droop

5.24 Striking surface.

The primary pack is supplied with a striking surface for safety matches.

5.25 Post, with a height of 0,5 m.

Place one or more posts inside the test area (4.3.2) with the related radius.

5.26 Cage, thin-wire cage with a mesh size of 10 mm to 15 mm.

The wire shall have a diameter of approximately 1,0 mm.

The inner length and width shall be (200 ± 10) mm. The inner height of the cage shall be (100 ± 10) mm.

6 Methods of tests

NOTE These methods are only examples. Any equivalent method with the same sensitivity and the same accuracy or better can be used.

6.1 Construction and stability

6.1.1 Length of handle

6.1.1.1 Apparatus

— Calliper (5.2);

— ruler (5.3);

— frame (5.20).

6.1.1.2 Procedure

6.1.1.2.1 Fireworks with visible handles

For type test measure and record the length of the uncoated end using the calliper (5.2) if the length of the handle is smaller than or equal to 100 mm or using the ruler (5.3) if the length exceeds 100 mm.

For batch test measure the length of the uncoated end by using the calliper (5.2), the ruler (5.3) or the frame (5.20) to determine the length of the uncoated end and record if the length of uncoated end is within the requirements.

If using the frame (5.20), place the fireworks with the handles in accordance with Figure 3 and record whether and if so, for how many items, the uncoated end is less than the required length.

6.1.1.2.2 Hand-held fountains without a separate handle

Carry out the type test using the fireworks that are used for determination of the net explosive content. Cut open the marked end of the firework case. Using calliper (5.2), measure and record the length of the firework case which is not filled with pyrotechnic composition to the nearest 1,0 mm.

6.1.2 Attachment of separate handle

6.1.2.1 Apparatus

— Timing device (5.1.1);

— weight (5.6.3).

6.1.2.2 Procedure

Clamp the sample by means of a clamping device in a position such that the handle of the sample is pointing vertically downwards. Securely attach the 500 g weight (5.6.3) to the handle.

Using the timing device (5.1.1) determine and record the time until the handle of the sample becomes detached. If this time is longer than 10 s, stop the test and record as “longer than 10 s”.

6.1.3 Length of item

6.1.3.1 Apparatus

— Ruler (5.3).

6.1.3.2 Procedure

Use the ruler to measure and record the total length of the test item to the nearest 1 mm.

6.1.4 Length of pull-string or pull-strip

6.1.4.1 Apparatus

— Ruler (5.3).

6.1.4.2 Procedure

Carefully extend the pull-string or pull-strip to its full length without firing the test item. Using the ruler (5.3), measure the total exposed length of the pull-string or pull-strip. Record the length.

6.1.5 Determination of diameter

6.1.5.1 Apparatus

— Calliper (5.2).

6.1.5.2 Procedure

Using the calliper (5.2), measure the inside diameter of the tube at least three times at different positions to the nearest 1,0 mm.

Using the calliper (5.2), measure the outer diameter of the propellant tube of the mini rocket at least three times at different positions to the nearest 0,5 mm.

Record the individual diameters and calculate the mean diameter.

6.1.6 Attachment of initial fuse

6.1.6.1 Apparatus

— 50 g mass with clamping device (5.6.1);

— 100 g mass with clamping device (5.6.2);

— timing device (5.1.1);

— clamping device (5.11).

6.1.6.2 Procedure

Clamp the firework by means of a clamping device (5.11) in such a position that the initial fuse is pointing vertically downwards. If testing a category F1 firework or a category F2 mini rocket, securely attach the 50 g mass with clamping device (5.6.1) to the initial fuse. If testing a category F2 firework other than a mini rocket or a category F3 firework, securely attach the 100 g mass with clamping device (5.6.2) to the initial fuse.

Using the timing device (5.1.1), determine and record the time until the initial fuse becomes detached. If this time is longer than 10 s stop the test and record as “longer than 10 s”.

6.1.7 Attachment of sealing paper, ignition head or friction head

See mechanical conditioning (6.14).

6.1.8 Resistance to ignition by an abrasive surface

6.1.8.1 Apparatus

— Abrasive sheet (5.8).

6.1.8.2 Procedure

Strike the friction head of the test sample in the test area (4.2 or 4.3) on the rough surface of the abrasive sheet (5.8). Record whether the friction head ignites.

6.1.9 Height of initial fuse for mounted wheels in category F3

6.1.9.1 Apparatus

— Measuring tape (5.4).

6.1.9.2 Procedure

Mount the wheel in accordance with the instructions on the label. Extend the protruding fuse vertically downwards and measure the height of the initial fuse above the ground to the nearest 10 mm, using a measuring tape (5.4). Record the height.

6.2 Design – Verification

6.2.1 General

These tests shall be done for type testing to verify that the tested item is in accordance with the requirements of EN 15947-5:2015.

For batteries, batteries requiring external support, combinations and combinations requiring external support three samples of each different pyrotechnic unit shall be inspected.

6.2.2 Conformity to drawings and part lists

The tested item shall be in accordance with the relevant manufacturing drawing. The drawing shall show any relevant component, e.g. pyrotechnic unit, with its dimensions, the masses of each pyrotechnic charge as well as the detailed pyrotechnic composition of the firework.

Observe and record any nonconformity.

6.2.3 Pyrotechnic composition – Determination of net explosive content

NOTE The total net explosive content excludes the powder weight of the initial fuses, transmitting fuses, friction or ignition heads.

6.2.3.1 Apparatus

— Timing device (5.1.2);

— balance 10 mg (5.7.2);

Using the timing device (5.1.1), determine and record the time until the initial fuse becomes detached. If this time is longer than 10 s stop the test and record as “longer than 10 s”.

6.1.7 Attachment of sealing paper, ignition head or friction head

See mechanical conditioning (6.14).

6.1.8 Resistance to ignition by an abrasive surface

6.1.8.1 Apparatus

— Abrasive sheet (5.8).

6.1.8.2 Procedure

Strike the friction head of the test sample in the test area (4.2 or 4.3) on the rough surface of the abrasive sheet (5.8). Record whether the friction head ignites.

6.1.9 Height of initial fuse for mounted wheels in category F3

6.1.9.1 Apparatus

— Measuring tape (5.4).

6.1.9.2 Procedure

Mount the wheel in accordance with the instructions on the label. Extend the protruding fuse vertically downwards and measure the height of the initial fuse above the ground to the nearest 10 mm, using a measuring tape (5.4). Record the height.

6.2 Design – Verification

6.2.1 General

These tests shall be done for type testing to verify that the tested item is in accordance with the requirements of EN 15947-5:2015.

For batteries, batteries requiring external support, combinations and combinations requiring external support three samples of each different pyrotechnic unit shall be inspected.

6.2.2 Conformity to drawings and part lists

The tested item shall be in accordance with the relevant manufacturing drawing. The drawing shall show any relevant component, e.g. pyrotechnic unit, with its dimensions, the masses of each pyrotechnic charge as well as the detailed pyrotechnic composition of the firework.

Observe and record any nonconformity.

6.2.3 Pyrotechnic composition – Determination of net explosive content

NOTE The total net explosive content excludes the powder weight of the initial fuses, transmitting fuses, friction or ignition heads.

6.2.3.1 Apparatus

— Timing device (5.1.2);

— balance 10 mg (5.7.2);

6.3.1.2 Procedure

6.3.1.2.1 General

Place the sheet of paper (5.10) on a horizontal area (4.2). Place the plate (5.12) in the middle of the test paper, only if testing table bombs, serpents, flash pellets, indoor non-hand-held sparklers or indoor fountains and place the sample on the plate. If the sample is not fitted with a base, then use the clamping device (5.11) to fix the sample at the required angle and height to the test paper.

6.3.1.2.2 Test configuration

The test configuration is given in Table 2. An additional test configuration for fountains (hand-held, for indoor use) is given in Table 3.

Table 2 — Test configuration

Article	Angle of test sample (5.19)	Height of test sample above test paper (5.10)
fountains (for indoor use)	vertical	direct on the plate
hand-held fountains (for indoor use)	45° upwards	(500 ± 10) mm
hand-held sparklers (for indoor use)	horizontal	(200 ± 10) mm
non hand-held sparklers (for indoor use)	vertical in supplied stand	direct on the plate
Bengal matches	horizontal	(200 ± 10) mm
novelty matches	horizontal	(200 ± 10) mm
serpents	vertical	direct on the plate
flash pellets	vertical	direct on the plate

Table 3 — Additional test configuration for fountains (hand-held, for indoor use)

Article	Angle of test sample (5.19)	Height of test paper (5.10) above test samples (additionally to the test paper (5.10) below the test sample)
fountains (hand-held, for indoor use)	vertical	(500 ± 10) mm

Ignite test sample in accordance with the label instruction with an appropriate ignition source.

After functioning, remove the sample, the plate and the clamping device, if any.

Record whether the test paper caught fire and/or has holes burnt in it.

6.3.2 Test for horizontal projected debris

6.3.2.1 Apparatus

— Ruler (5.3);

— test paper (5.10);

— clamping device (5.11);

— paper holder (5.13);

— goniometer (5.19).

6.3.2.2 Procedure

If applicable use the clamping device (5.11) to fix the test sample at the specified height, measured with the ruler (5.3), and angle, measured with the goniometer (5.19), above the centre of the test paper (5.10).

Use paper holder (5.13) to fix the test paper (5.10) vertically. Using ruler (5.3) to adjust the paper holder in the required position and distance.

Function the test sample in accordance with the labelled instructions with an appropriate ignition source (5.21). In case of party poppers pull the string to fire the party popper.

Record whether any ejected material penetrated the sheet of test paper, or whether the ejected material or test paper caught fire.

Dimensions in millimetres

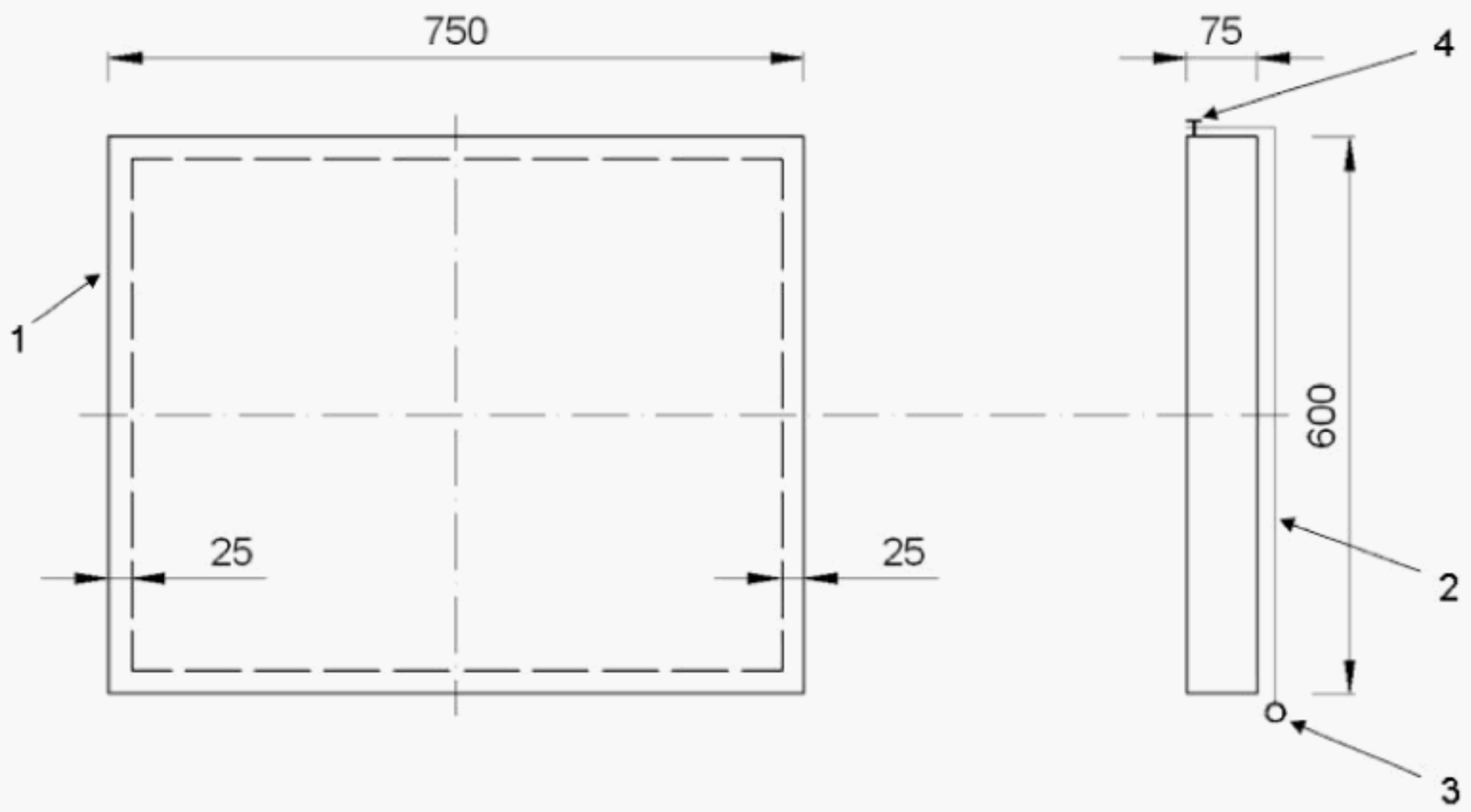

Key

1 paper clamp

Figure 6 — Example of paper holder

Dimensions in millimetres

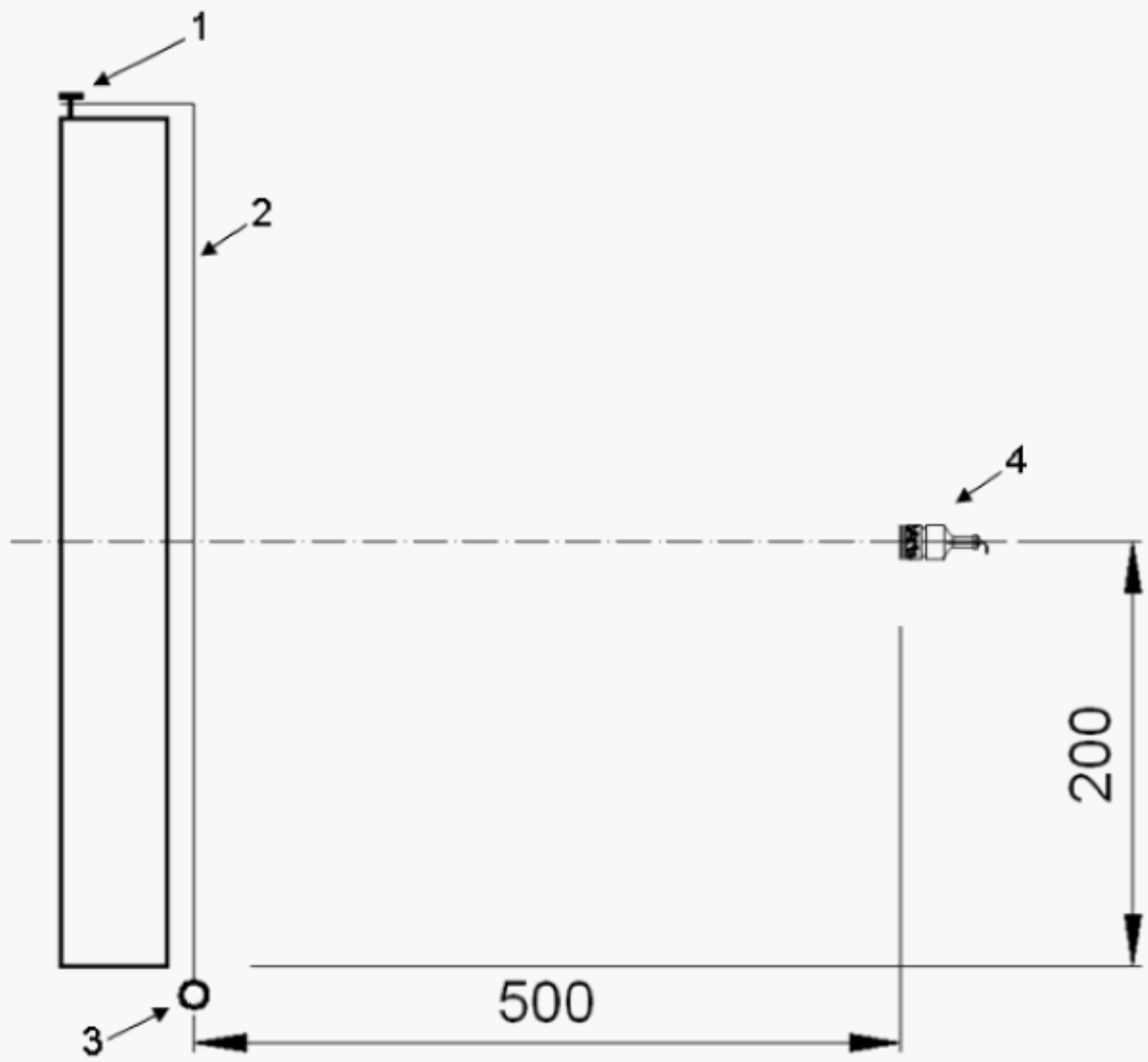

Key

1 party popper

Figure 7 — Arrangement for party popper performance test

6.3.3 Test for vertical projected debris

6.3.3.1 Apparatus

— Ruler (5.3);

— test paper (5.10);

— clamping device (5.11);

— paper holder (5.13);

— goniometer (5.19).

6.3.3.2 Procedure

If applicable use the clamping device (5.11) to fix the test sample at the specified height, measured with the ruler (5.3), and angle, measured with goniometer (5.19), above the centre of the test paper.

Use paper holder (5.13) to fix the test paper (5.10) horizontally. Use ruler (5.3) to adjust the paper holder to the required position and distance.

Ignite the test sample in accordance with the labelled instructions.

Record whether any ejected material penetrated the sheet of test paper and whether any ejected material were made of glass or sharp metal, or whether the ejected material or either sheet of test paper caught fire.

Dimensions in millimetres

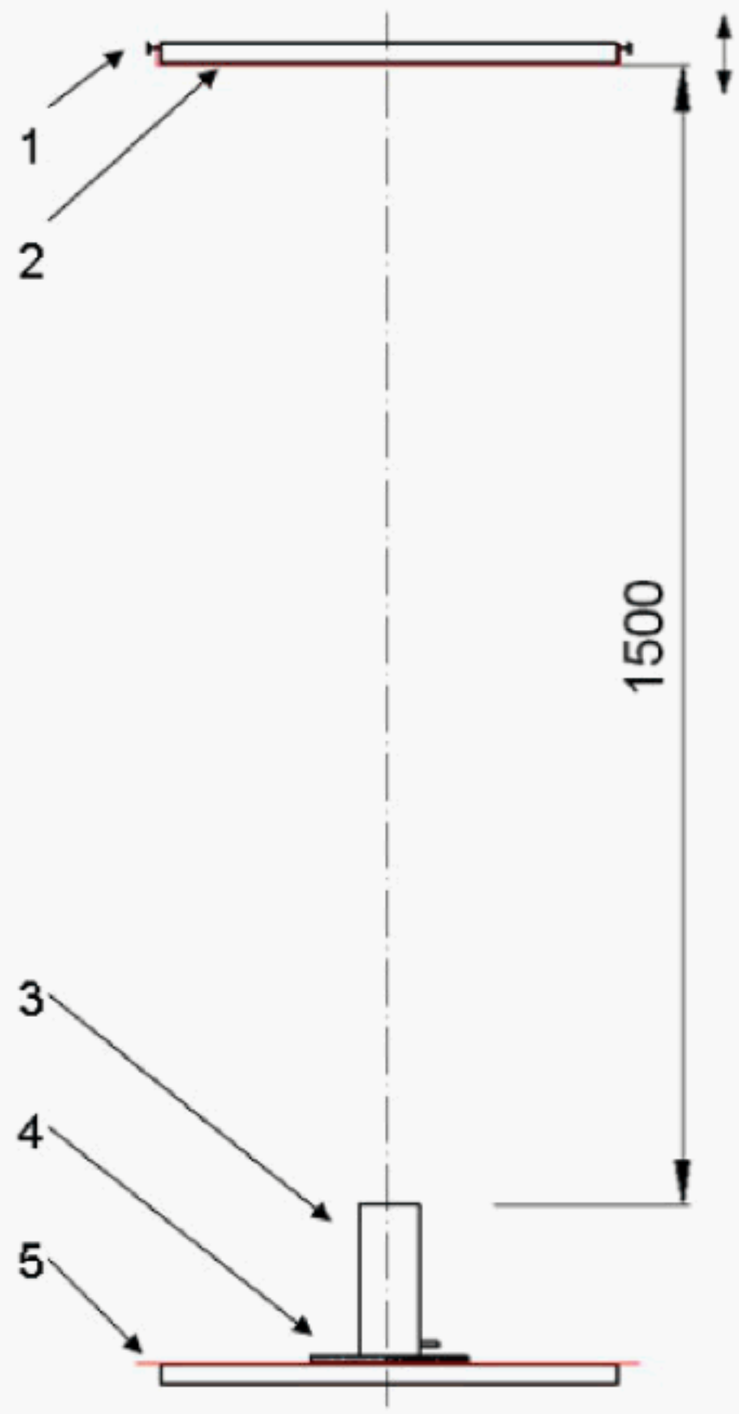

Key

1 test paper

Figure 8 — Arrangement for table bombs performance test

6.4 Angle of ascent and height of effects

6.4.1 Apparatus

— Viewing screen (5.14);

— poles (5.15);

— rack (5.16);

— post (5.25).

6.4.2 Procedure for double bangers

Position the rack (5.16) so the centre of the 800 mm hole is directly above the centre of the test area. Place the double banger in accordance with the labelled instructions in the centre of the test area and ignite.

Observe and record whether the double banger passes through the hole in the horizontal plate. Estimate and record the height where the second report occurs.

6.4.3 Procedure for items other than double bangers

Two observers with viewing screens are positioned in accordance with 4.4 so that the bottom edge of the triangle on the screen aligns with the base of the test sample, and the bottom edge of the back screen aligns with the bottom edge of the horizontal tape on the front screen.

Ignite the sample in accordance with the labelled instructions.

Record whether the angle of ascent and the height of the effects of the test sample were within the limits specified.

Record whether any burning matter was extinguished at the specified height by using the poles (5.15).

Record whether any bursts or explosions occurred at a height of less than the specified height by using the poles (5.15).

Ground movers, ground spinners and jumping ground spinners shall not move outside the relevant distance. Observe the height reached by category F1 articles with the aid of the posts (5.25).

6.5 Measurement of sound pressure level

6.5.1 General measurement for outdoors

6.5.1.1 Apparatus

— Sound level meter (5.17);

— measuring tape (5.4).

6.5.1.2 Procedure

The measurement of the sound pressure level shall be carried out outdoors for all fireworks of category F1, F2 and F3 except for party poppers, Christmas crackers and snaps.

Set up the microphone of the sound level meter in the test area (4.2 or 4.3) at the required distance and at a height of 1,0 m.

a) For category F1, the microphone is set up at a horizontal distance of 1,0 m from the testing point.

b) For category F2, the microphone is set up at a horizontal distance of 8,0 m from the testing point.

c) For category F3, the microphone is set up at a horizontal distance of 15,0 m from the testing point.

Record the maximum A-weighted impulse sound pressure levels as measured by the sound level meter (5.17).

For ground spinners, jumping crackers and ground movers 10 extra measurements of sound pressure level shall be performed with the item fixed to the firing point by a cage (5.26) which ensures no movement of more than 0,1 m to all directions.

6.5.2 Party poppers for indoors

6.5.2.1 Apparatus

— Sound level meter (5.17);

— ruler (5.3).

6.5.2.2 Procedure

Set up the microphone of the sound level meter (5.17) in the test area (4.1) at a height of (200 ± 10) mm above the surface, determined by the ruler (5.3) and at a horizontal distance of 500 mm behind the sample, determined by the ruler (5.3), see Figure 9.

Dimensions in millimetres

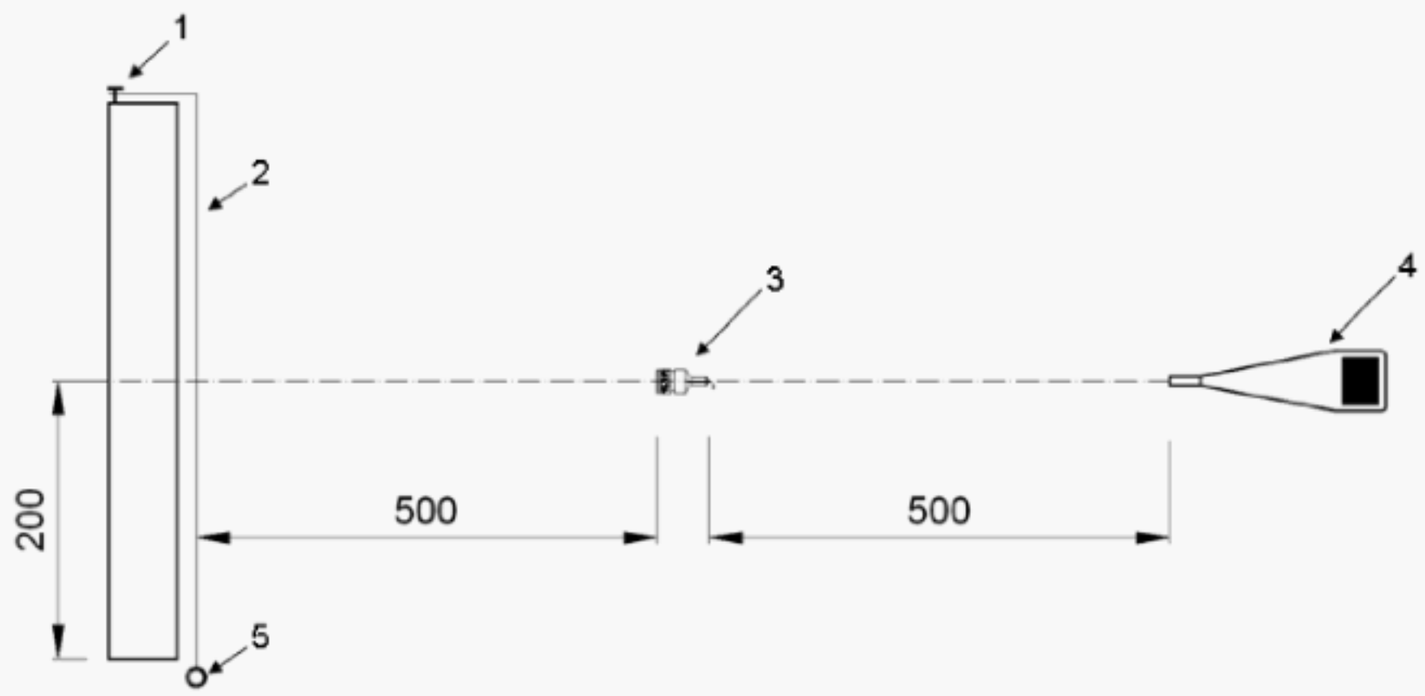

Key

1

weighted rod

Figure 9 — Arrangement of sound level measuring

Unfold the pull-string, if necessary, and extend the pull-string to its full length. Pull the string sharply. If the pull-string breaks, record the fact and do not proceed with further testing of that party popper. Observe and record whether the party popper produces a single report.

Record the maximum A-weighted impulse sound pressure as measured by the sound level meter (5.17).

6.5.3 Christmas crackers and snaps for indoors

6.5.3.1 Apparatus

— Sound level meter (5.17);

— ruler (5.3).

6.5.3.2 Procedure

Set up the microphone of the sound level meter (5.17) in the test area (4.1) at a height of (200 ± 10) mm above the surface, determined by the ruler (5.3) and at a horizontal distance of 200 mm from the sample, determined by the ruler (5.3), see Figure 10.

Dimensions in millimetres

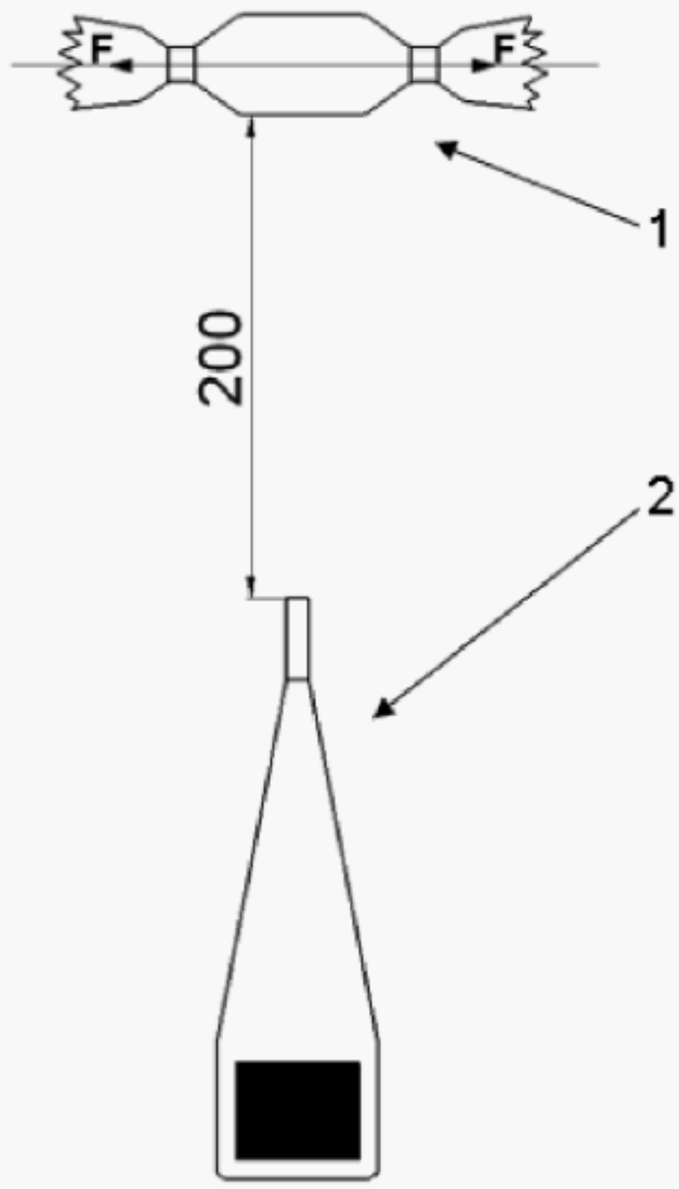

Key

1 sound level meter

Figure 10 — Arrangement of sound level measuring

Pull the Christmas cracker or snap sharply. Observe and record whether the Christmas cracker or snap produces a single report.

If the pull-strip breaks, record the fact and do not proceed with further testing of that Christmas cracker or snap.

Record the maximum A-weighted impulse sound pressure as measured by the sound level meter (5.17).

6.6 Timing measurement

6.6.1 Apparatus

— Timing device (5.1.1);

— ignition source (5.21).

6.6.2 Procedure

6.6.2.1 Ignition time

Remove any protection of initial fuse and ignite in accordance with the labelled instructions.

Apply the ignition source (5.21) to the initial fuse and at the same instant, start the timing device (5.1.1). Stop the intermediate time at the moment the initial fuse ignites. If the initial fuse fails to ignite within the required time, record the fact and do not proceed with further testing of that firework.

If the firework has a friction head, strike the friction head of the firework on the ignition source, supplied with the firework. If the firework fails to ignite at the first strike try it twice more. Record if the firework did not ignite.

6.6.2.2 Initial fuse time

Initial fuse time shall be measured by using the timing device (5.1.1) and shall be recorded from the moment the initial fuse ignites to the time the firework starts to produce its preliminary effect.

6.6.2.3 Invisible burning time

If the preliminary effect is different from the first principal effect, measure and record the invisible burning time after the preliminary effect by using the timing device (5.1.1).

For Roman candles measure and record the invisible burning time after the preliminary effect by using the timing device (5.1.1).

6.6.2.4 Delay time for compound fireworks

Measure the delay time between the single fireworks in the compound firework (time between end of effect of one firework and start of functioning of the next firework) using the timing device (5.1.1) and check and record if 15 s are exceeded.

6.7 Measuring of labelling

6.7.1 Apparatus

— Calliper (5.2);

— transparent type size sheet (5.22).

6.7.2 Procedure

Using the calliper (5.2) or the transparent type size sheet (5.22), record whether the type sizes are correct and the printing is legible.

6.8 Extinguishing of flames

6.8.1 Apparatus

— Timing device (5.1.1).

6.8.2 Procedure

After the firework has ceased to function start the timing device (5.1.1) immediately and record the time until any flames caused by the functioning of the fireworks are extinguished.

6.9 Burning rate of composition

6.9.1 Apparatus

— Timing device (5.1.1).

6.9.2 Procedure

Immediately after starting the principal effect of the fireworks start the timing device (5.1.1) and stop after the end of the principal effect and record the time.

Estimate the burning rate by using the net explosive content in accordance with 6.2.3 or in accordance with the CE conformity documents in grams divided by the measured time in seconds. Record the burning rate in grams per second.

6.10 Droop test

6.10.1 Apparatus

— Protractor (5.23);

— goniometer (5.19).

6.10.2 Procedure

After functioning remove the hand-held sparkler from the clamping device (5.11) and use it for the measurement of the droop.

Measure the deflection of the unsupported tip from the horizontal, as shown in Figure 5, using the protractor (5.23) or the goniometer (5.19). Record the droop angle from the horizontal.

6.11 Projected debris (outdoor)

6.11.1 Apparatus

— Balance (5.7.1).

6.11.2 Procedure

Record whether any debris is projected laterally more than the relevant safety distance during functioning.

Record whether there is any debris of metal projected.

For rockets and aerial wheels, collect any debris which might have a mass exceeding the specified limits. Measure with the balance (5.7.1) and record any particle of debris which exceeds the specified mass.

6.12 Incandescent matter

Observe and record whether any burning or incandescent matter falls to the ground outside the relevant safety distance.

6.13 Visual and audible examinations

The visual examination shall be done by naked eye and shall verify the requirements for this inspection.

The audible inspection shall be done by suitably protected ears at the relevant safety distance and shall verify the requirements for this inspection.

Record any anomalies.

6.14 Mechanical conditioning

6.14.1 Apparatus

— Shock apparatus (5.18);

— balance capable of weighing to an accuracy 10 mg (5.7.2); or

— balance capable of weighing to an accuracy 0,1 mg (5.7.3);

— timing device (5.1.2).

6.14.2 Procedure

Place a sheet of paper on the platform of the mechanical shock apparatus (5.18) and place the test samples on the top of the sheet of paper. For test samples supplied in primary packs in order to protect the initial fuse of the test sample, use the appropriate number of complete, unopened packs. Cover the test samples or packs with the cellular rubber sheet and secure it to the platform around its edges. Start the machine so that the minimum deceleration of each shock is 490^{+100}_{-50} m²/s and the duration of each shock impulse is (2 ± 1) ms. Continue running the machine with a frequency of (1 ± 0,1) Hz for 1 h (5.1.2).

At the end of the 1 h (5.1.2) period stop the machine and remove the test samples or primary packs. For samples which have been conditioned in primary packs, carefully open the packs, remove the samples and empty any loose material on to the sheet of paper. Separate any pyrotechnic composition from the loose material and weight this pyrotechnic composition with the balance (5.7.2). For novelty matches, party poppers, throwdowns, Christmas crackers and snaps use a balance with an accuracy of 0,1 mg (5.7.3).

Record the mass of the pyrotechnic composition and whether any articles are damaged to an extent that might affect their functioning.

If applicable, record whether there was any damaged or loose sealing paper, ignition head or friction head.

For throwdowns, record whether any of the samples have exploded. Observe visually and record whether there is any damage to the primary pack and whether it has opened and whether any material has fallen out.

6.15 Thermal conditioning

6.15.1 Apparatus

— Temperature chamber (5.9.2); or

— temperature chamber (5.9.3);

— timing device (5.1.2).

6.15.2 Procedure (option 1)

Store the fireworks for 48 h (5.1.2) at a temperature of (75,0 ± 2,5) °C in the temperature chamber (5.9.2) and then for at least two days at ambient temperature before testing. For fireworks which were supplied in primary packs, condition the fireworks by storing the appropriate number of complete, unopened packs.

Record whether any article presents signs of ignition or chemical reaction. If any signs are visible the test is failed and no re-test in accordance with 6.15.3 is possible.

Record whether any articles are damaged to an extent that might affect their functioning.

6.15.3 Procedure (option 2)

Store the fireworks for 28 d (5.1.2) at a temperature of (50,0 ± 2,5) °C in the temperature chamber (5.9.3) and then for at least two days at ambient temperature before testing. For fireworks which were supplied in primary packs, condition the fireworks by storing the appropriate number of complete, unopened packs.

Record whether any article presents signs of ignition or chemical reaction. If any signs are visible the test is failed and no re-test in accordance with 6.15.2 is possible.

Record whether any articles causes damages which could deteriorate the function.

6.16 Striking surface test

6.16.1 Apparatus

— Striking surface (5.24).

6.16.2 Procedure

All samples from the primary pack, if any, shall be ignited with the striking surface using the striking surface as shown on the labelled firework.

6.17 Function test

6.17.1 Apparatus

— Test area (4.2), if applicable;

— test area (4.3), if applicable.

6.17.2 Procedure

Place and ignite test sample in accordance to the labelled instruction.

The visual and audible examination while functioning shall confirm:

— the related principal effect;

— that all pyrotechnic units functioned completely;

— the article remains upright while functioning;

— no explosion or rupture occurs during function (except in case the explosion is the principal effect);

— that there is no splintering of plastics body (for bangers, crackling granules and flash bangers);

— that there is no splintering of aluminium body (for rocket motors);

6.15.2 Procedure (option 1)

Store the fireworks for 48 h (5.1.2) at a temperature of (75,0 ± 2,5) °C in the temperature chamber (5.9.2) and then for at least two days at ambient temperature before testing. For fireworks which were supplied in primary packs, condition the fireworks by storing the appropriate number of complete, unopened packs.

Record whether any article presents signs of ignition or chemical reaction. If any signs are visible the test is failed and no re-test in accordance with 6.15.3 is possible.

Record whether any articles are damaged to an extent that might affect their functioning.

6.15.3 Procedure (option 2)

Store the fireworks for 28 d (5.1.2) at a temperature of (50,0 ± 2,5) °C in the temperature chamber (5.9.3) and then for at least two days at ambient temperature before testing. For fireworks which were supplied in primary packs, condition the fireworks by storing the appropriate number of complete, unopened packs.

Record whether any article presents signs of ignition or chemical reaction. If any signs are visible the test is failed and no re-test in accordance with 6.15.2 is possible.

Record whether any articles causes damages which could deteriorate the function.

6.16 Striking surface test

6.16.1 Apparatus

— Striking surface (5.24).

6.16.2 Procedure

All samples from the primary pack, if any, shall be ignited with the striking surface using the striking surface as shown on the labelled firework.

6.17 Function test

6.17.1 Apparatus

— Test area (4.2), if applicable;

— test area (4.3), if applicable.

6.17.2 Procedure

Place and ignite test sample in accordance to the labelled instruction.

The visual and audible examination while functioning shall confirm:

— the related principal effect;

— that all pyrotechnic units functioned completely;

— the article remains upright while functioning;

— no explosion or rupture occurs during function (except in case the explosion is the principal effect);

— that there is no splintering of plastics body (for bangers, crackling granules and flash bangers);

— that there is no splintering of aluminium body (for rocket motors);

Annex A
(informative)
Mechanical conditioning (shock apparatus)

Illustrated in the following figures, comprising the following components:

a) **flat horizontal platform** made of steel, 800 mm × 600 mm, 2 mm to 3 mm thick, with a 3 mm thick rim having a height of 15 mm; the platform is reinforced with eight steel ribs, 5 mm thick with a height of 30 mm, which are welded to the underside and run from the centre to each of the four corners and to the middle of each edge;

b) **20 mm thick plate of fibreboard**, firmly attached to the platform by screws;

c) **cylindrical steel boss**, diameter 125 mm and height 35 mm, located under the centre of the platform;

d) **284 mm long shaft**, with diameter of 20 mm, fixed to the centre of the boss;

e) **restraining peg**, to prevent the platform from rotating; the mass of the platform assembly (items a) to e)) shall be (23 ± 1) kg;

f) **annular, elastomeric pressure spring**, with a Shore A hardness of 68, when determined in accordance with EN ISO 868, outside diameter 125 mm, inside diameter 27 mm and height 32 mm, on which the cylindrical boss will rest;

g) **shallow steel cylinder**, inside diameter 126 mm, wall thickness 5 mm, outside height 30 mm, with a base 8 mm thick which has a 25 mm diameter hole drilled through the centre, to contain the elastomeric spring;

h) **supporting steel cylinder**, outside diameter 80 mm, inside diameter 60,1 mm and height 92,4 mm, to which the shallow cylinder is screwed;

i) **PVC liner**, outside diameter 60 mm, inside diameter 20,2 mm and height 92,4 mm, located inside the supporting cylinder and attached by a screw;

j) **steel mounting plate**, thickness 12 mm with a 25 mm hole drills through the centre, to which the supporting steel cylinder is screwed;

k) **steel base plate**, thickness 12 mm;

l) **four supporting pillars**, height 260 mm and diameter 32 mm, screwed to the mounting plate and to the base plate;

m) **framework** to support the based plate so that the complete assembly is at a convenient height;

n) **attachment to the shaft**, allowing adjustment to the overall length, fitted with a cam wheel, outside diameter 30,0 mm, with a contact surface 8,0 mm wide;

o) **cylindrical cam**, outside diameter 120 mm, inside diameter 100 mm, wall thickness 10 mm, with a "vertical drop" of 50,0 mm between the high point and the low point;

p) **collar**, outside diameter 50 mm, height 4,0 mm;

q) **electric motor and suitable gearing**, to rotate the cam at a rotational frequency of 1 Hz;

r) **cellular rubber sheet**, 100 mm thick. The material used shall have an apparent density when determined in accordance with EN ISO 845, of 35 kg/m³ and an indention hardness check, when determined in accordance with EN ISO 2439 of 215 N.

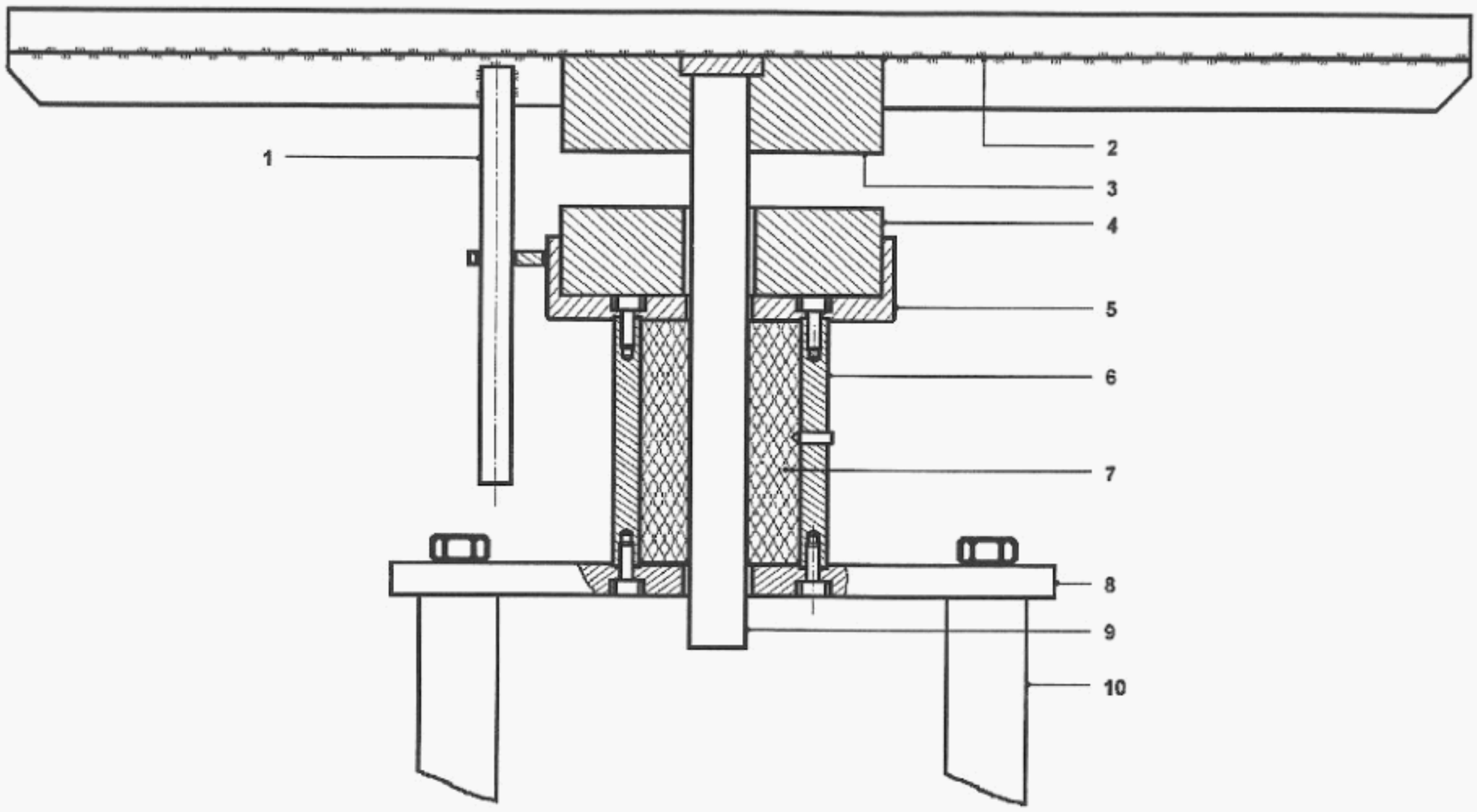

Key

1 supporting pillar

Figure A.1 — Detail of top section of mechanical shock apparatus

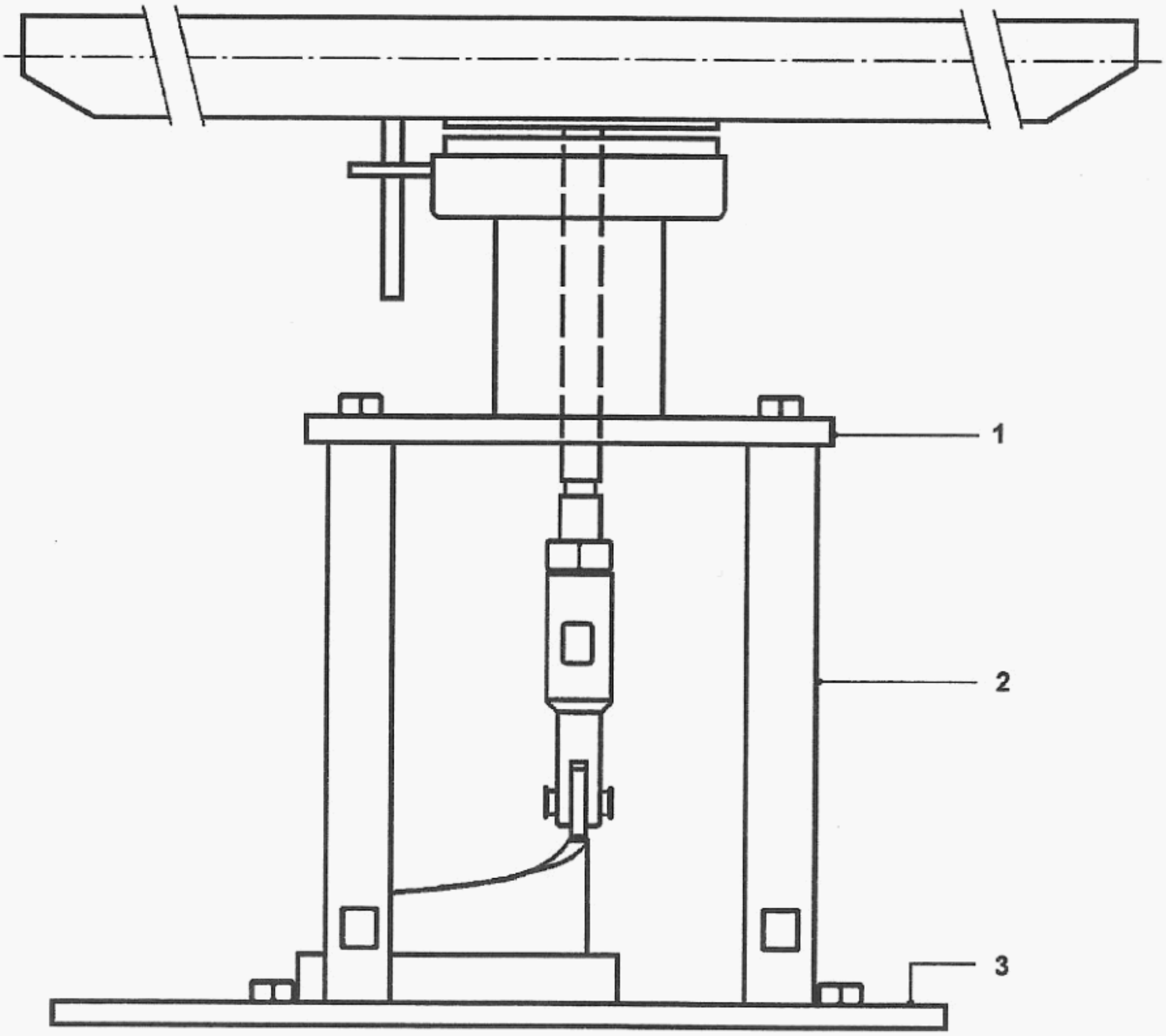

Key

1 base plate

Figure A.2 — General assembly of mechanical shock apparatus

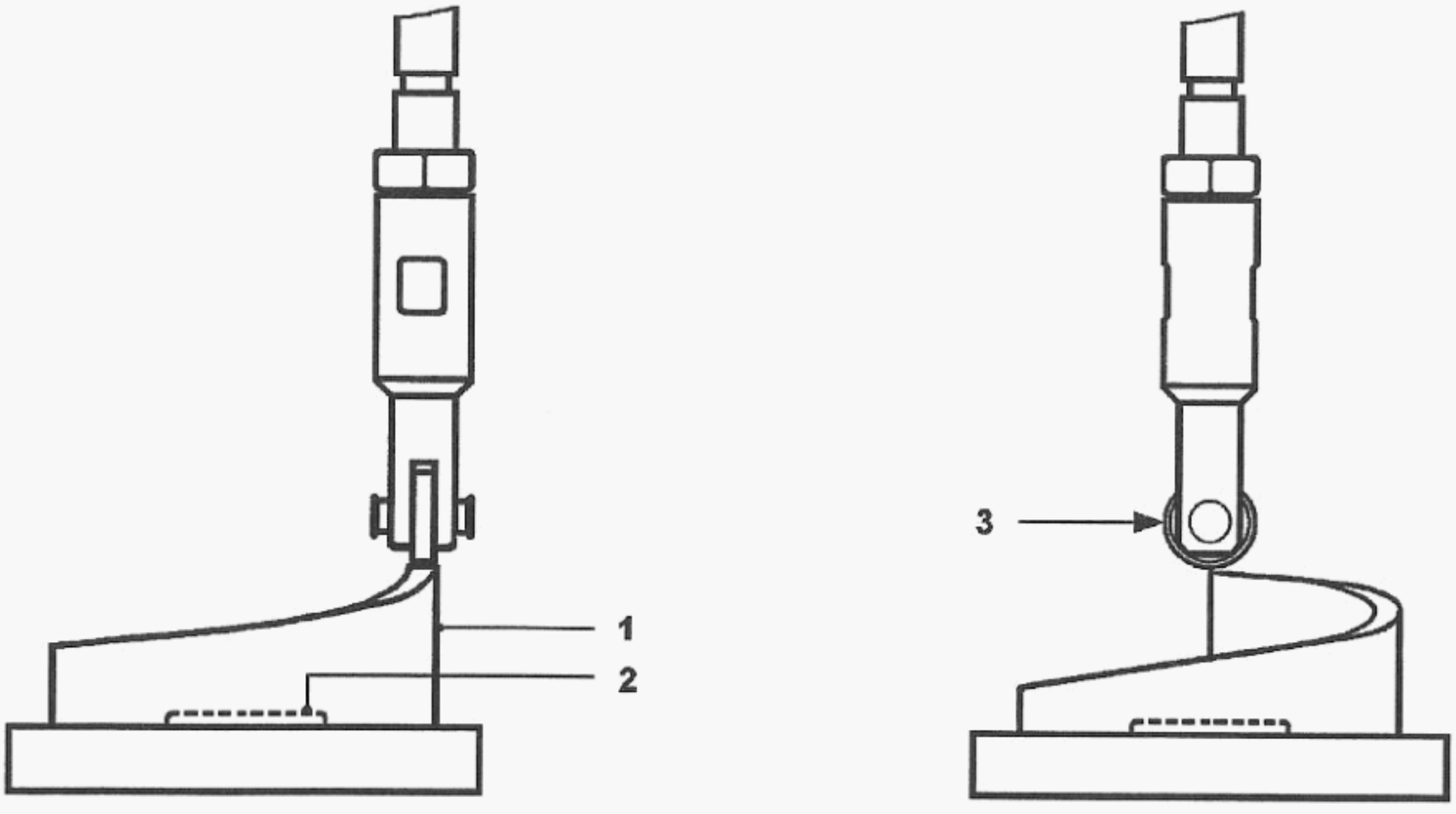

Key

1

3 cam wheel

Figure A.3 — Detail of shaft attachment and cam assembly of mechanical shock apparatus

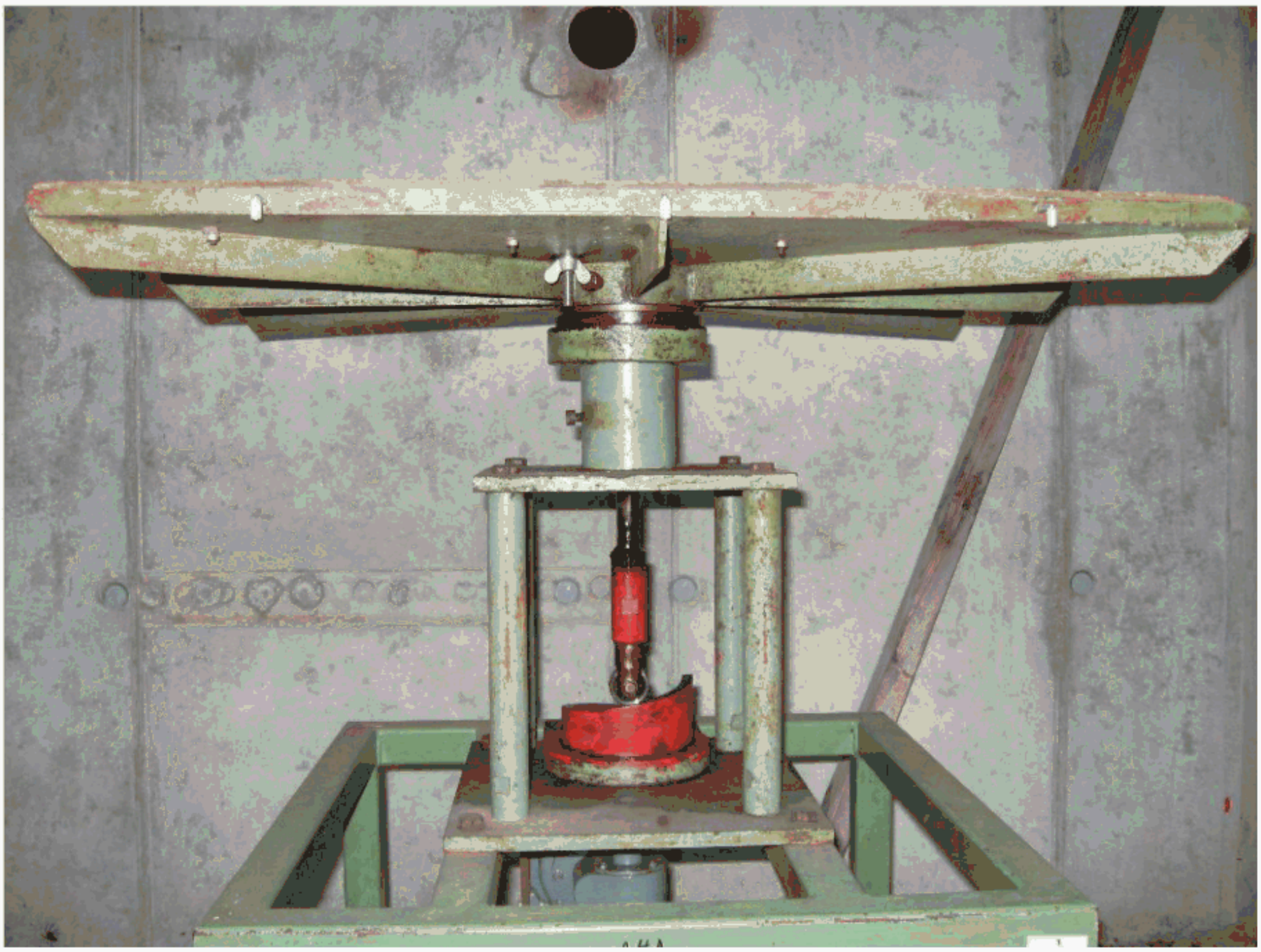

a)

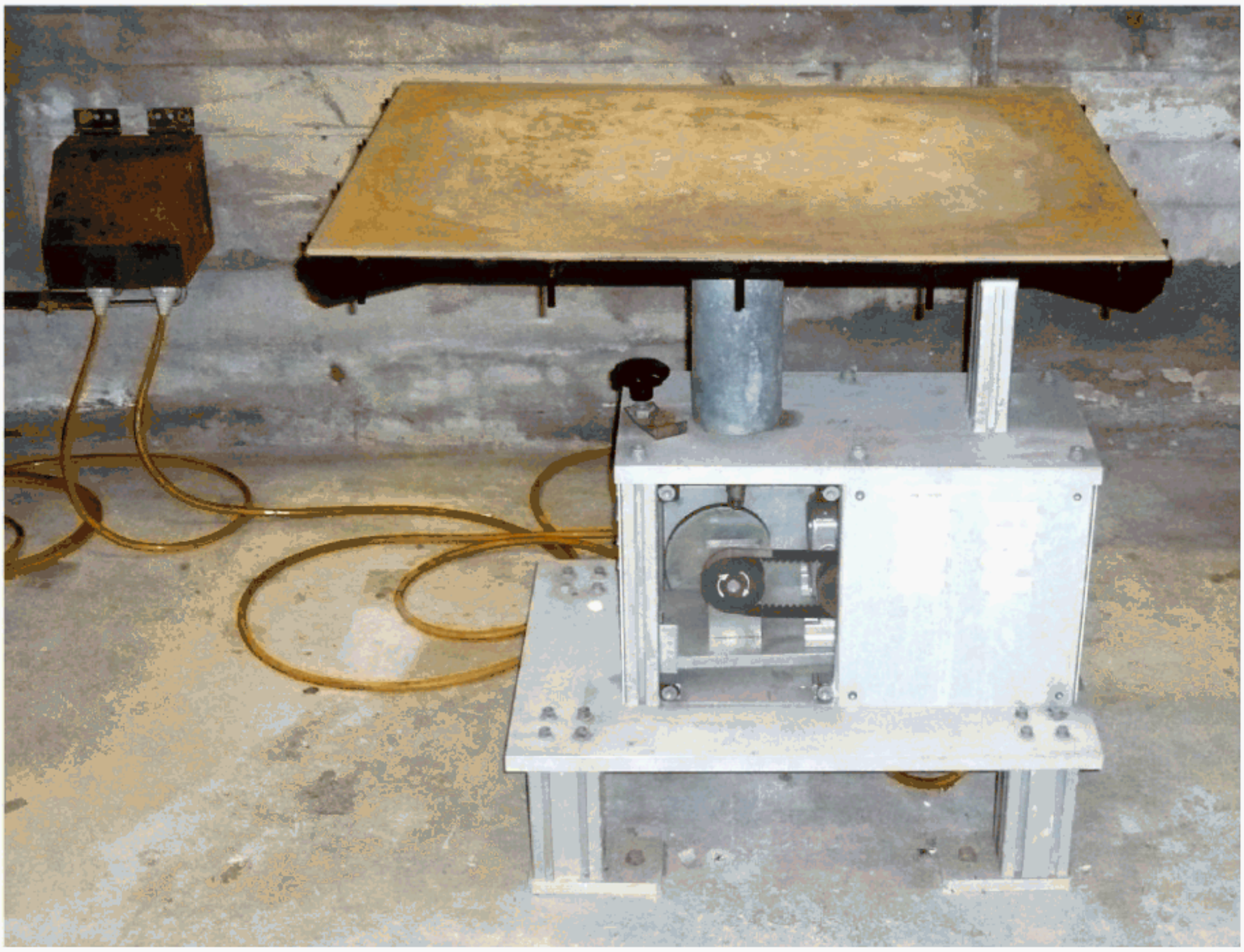

b)

Figure A.4 — Examples of mechanical shock apparatus

Annex B
(informative)
Determination of silver fulminate

B.1 Reagents

— Purified water, conforming to grade 3 of EN ISO 3696:1995;

— concentrated ammonia solution;

— nitric acid solution, 10 g / 100 ml;

— hydrochloric acid solution, 5 g / 100 ml.

B.2 Apparatus

— Laboratory balance, capable of weighing to the nearest 0,1 mg (5.7.3);

— beaker, 100 ml;

— beaker, 200 ml;

— filter funnel;

— filter paper;

— glass filter crucible with a porous glass filter grade P16 conforming to ISO 4793;

— scalpel;

— timing device (5.1.2);

— temperature chamber up to (130 ± 2,5) °C (5.9.1).

B.3 Procedure

Select a random of:

a) 50 novelty matches from the primary pack. Carefully cut out the segment of the sticks which is covered with report composition using the scalpel;

b) 50 snaps or throwdowns from the primary pack. Remove them carefully from the paper.

Put the parts from a) or b) in a 100 ml beaker and wet it with 30 ml of purified water and 20 ml of the ammonia solution. Warm the solution while stirring continuously, and transfer the hot solution quantitatively to the filter funnel containing the filter paper into the 200 ml beaker and wash the residue with purified water.

Dilute the filtrate with 100 ml of purified water. Acidify the diluted filtrate by carefully adding the nitric acid solution and heat it until boiling. While stirring contentiously, add the hydrochloric acid solution drop by drop until no further precipitate is formed.

Store the solution with the precipitate in the dark for 3 h (5.1.2). Weigh the glass filter crucible to the nearest 0,1 mg, using the balance (5.7.3) and record the mass (m_0). Filter the precipitate through the glass filter crucible and wash it with purified water until the washings are neutral. Dry the filter crucible for 1 h (5.1.2) at 130 °C (5.9.1). Allow the crucible with the residue to cool down to room temperature, weigh it to the nearest 0,1 mg, using the balance (5.7.3) and record the mass (m_1).

Calculate the mean mass, in milligrams, of silver fulminate per sample from the following equation:

$$\overline{m} = 1{,}0456\left(\frac{m_1 - \mathrm{m}_0}{50}\right) \qquad \text{(B.1)}$$

Record the mean mass of silver fulminate.

Annex ZA
(informative)
Relationship between this European Standard and the Essential Requirements of EU Directive 2013/29/EU on the harmonization of the laws of the Member States relating to the making available on the market of pyrotechnic articles

This European Standard has been prepared under a mandate given to CEN by the European Commission and the European Free Trade Association to provide a means of conforming to Essential Requirements of the New Approach Directive 2013/29/EU on the harmonization of the laws of the Member States relating to the making available on the market of pyrotechnic articles. The Parts 1, 2, 3 and 4 of the European Standard will support Part 5 to fulfil the essential safety requirements of the Directive 2013/29/EU, Annex 1.

Once this standard is cited in the Official Journal of the European Union under that Directive and has been implemented as a national standard in at least one Member State, compliance with the clauses of this standard given in Table ZA.1 confers, within the limits of the scope of this standard, a presumption of conformity with the corresponding Essential Requirements of that Directive and associated EFTA regulations.

Table ZA.1 — Correspondence between this European Standard and Directive 2013/29/EU on the harmonization of the laws of the Member States relating to the making available on the market of pyrotechnic articles

Clause(s)/subclause(s) of this EN	Essential Safety Requirements (ESRs) of Directive 2013/29/EU	Qualifying remarks/Notes
4.1, 4.2, 4.3	3) 2nd and 3rd sentence	

WARNING — Other requirements and other EU Directives may be applicable to the product(s) falling within the scope of this standard.

Bibliography

[1] EN 15947-2:2015, *Pyrotechnic articles — Fireworks, Categories F1, F2 and F3 — Part 2: Categories and types of firework*

[2] EN ISO 3696:1995, *Water for analytical laboratory use - Specification and test methods (ISO 3696:1987)*

[3] ISO 4793, *Laboratory sintered (fritted) filters — Porosity grading, classification and designation*

[4] Directive 2007/23/EC of the European Parliament and of the Council of 23 May 2007 on the placing on the market of pyrotechnic articles

[5] Directive 2013/29/EU of the European Parliament and of the Council of 12 June 2013 on the harmonisation of the laws of the Member States relating to the making available on the market of pyrotechnic articles

This page deliberately left blank

This page deliberately left blank

NO COPYING WITHOUT BSI PERMISSION EXCEPT AS PERMITTED BY COPYRIGHT LAW

British Standards Institution (BSI)

BSI is the national body responsible for preparing British Standards and other standards-related publications, information and services.

BSI is incorporated by Royal Charter. British Standards and other standardization products are published by BSI Standards Limited.

About us

We bring together business, industry, government, consumers, innovators and others to shape their combined experience and expertise into standards -based solutions.

The knowledge embodied in our standards has been carefully assembled in a dependable format and refined through our open consultation process. Organizations of all sizes and across all sectors choose standards to help them achieve their goals.

Information on standards

We can provide you with the knowledge that your organization needs to succeed. Find out more about British Standards by visiting our website at bsigroup.com/standards or contacting our Customer Services team or Knowledge Centre.

Buying standards

You can buy and download PDF versions of BSI publications, including British and adopted European and international standards, through our website at bsigroup.com/shop, where hard copies can also be purchased.

If you need international and foreign standards from other Standards Development Organizations, hard copies can be ordered from our Customer Services team.

Subscriptions

Our range of subscription services are designed to make using standards easier for you. For further information on our subscription products go to bsigroup.com/subscriptions.

With **British Standards Online (BSOL)** you'll have instant access to over 55,000 British and adopted European and international standards from your desktop. It's available 24/7 and is refreshed daily so you'll always be up to date.

You can keep in touch with standards developments and receive substantial discounts on the purchase price of standards, both in single copy and subscription format, by becoming a **BSI Subscribing Member**.

PLUS is an updating service exclusive to BSI Subscribing Members. You will automatically receive the latest hard copy of your standards when they're revised or replaced.

To find out more about becoming a BSI Subscribing Member and the benefits of membership, please visit bsigroup.com/shop.

With a **Multi-User Network Licence (MUNL)** you are able to host standards publications on your intranet. Licences can cover as few or as many users as you wish. With updates supplied as soon as they're available, you can be sure your documentation is current. For further information, email bsmusales@bsigroup.com.

Revisions

Our British Standards and other publications are updated by amendment or revision.

We continually improve the quality of our products and services to benefit your business. If you find an inaccuracy or ambiguity within a British Standard or other BSI publication please inform the Knowledge Centre.

Copyright

All the data, software and documentation set out in all British Standards and other BSI publications are the property of and copyrighted by BSI, or some person or entity that owns copyright in the information used (such as the international standardization bodies) and has formally licensed such information to BSI for commercial publication and use. Except as permitted under the Copyright, Designs and Patents Act 1988 no extract may be reproduced, stored in a retrieval system or transmitted in any form or by any means – electronic, photocopying, recording or otherwise – without prior written permission from BSI. Details and advice can be obtained from the Copyright & Licensing Department.

Useful Contacts:

Customer Services
Tel: +44 845 086 9001
Email (orders): orders@bsigroup.com
Email (enquiries): cservices@bsigroup.com

Subscriptions
Tel: +44 845 086 9001
Email: subscriptions@bsigroup.com

Knowledge Centre
Tel: +44 20 8996 7004
Email: knowledgecentre@bsigroup.com

Copyright & Licensing
Tel: +44 20 8996 7070
Email: copyright@bsigroup.com

BSI Group Headquarters

389 Chiswick High Road London W4 4AL UK

bsi.