BS EN 4710-05:2015

BSI Standards Publication

Aerospace series — Quick release fastening systems for non-structural applications

Part 05: Spring clamp — Two ways tolerance compensation

bsi.

...making excellence a habit.™

National foreword

This British Standard is the UK implementation of EN 4710-05:2015.

The UK participation in its preparation was entrusted to Technical Committee ACE/12, Aerospace fasteners and fastening systems.

A list of organizations represented on this committee can be obtained on request to its secretary.

This publication does not purport to include all the necessary provisions of a contract. Users are responsible for its correct application.

© The British Standards Institution 2015.
Published by BSI Standards Limited 2015

ISBN 978 0 580 89134 2

ICS 49.035

Compliance with a British Standard cannot confer immunity from legal obligations.

This British Standard was published under the authority of the Standards Policy and Strategy Committee on 31 October 2015.

Amendments/corrigenda issued since publication

Date	Text affected

EUROPEAN STANDARD

NORME EUROPÉENNE

EUROPÄISCHE NORM

EN 4710-05

October 2015

ICS 49.035

English Version

Aerospace series - Quick release fastening systems for non-structural applications - Part 05: Spring clamp - Two ways tolerance compensation

Série aérospatiale - Fixations rapides filetées pour applications non-structurales - Partie 05 : Collier lyre - Deux degrés de liberté

Luft- und Raumfahrt - Schnellverschlüsse für nicht-strukturelle Anwendungen - Teil 05: Federclip - Zweifacher Toleranzausgleich

This European Standard was approved by CEN on 5 March 2015.

CEN members are bound to comply with the CEN/CENELEC Internal Regulations which stipulate the conditions for giving this European Standard the status of a national standard without any alteration. Up-to-date lists and bibliographical references concerning such national standards may be obtained on application to the CEN-CENELEC Management Centre or to any CEN member.

This European Standard exists in three official versions (English, French, German). A version in any other language made by translation under the responsibility of a CEN member into its own language and notified to the CEN-CENELEC Management Centre has the same status as the official versions.

CEN members are the national standards bodies of Austria, Belgium, Bulgaria, Croatia, Cyprus, Czech Republic, Denmark, Estonia, Finland, Former Yugoslav Republic of Macedonia, France, Germany, Greece, Hungary, Iceland, Ireland, Italy, Latvia, Lithuania, Luxembourg, Malta, Netherlands, Norway, Poland, Portugal, Romania, Slovakia, Slovenia, Spain, Sweden, Switzerland, Turkey and United Kingdom.

EUROPEAN COMMITTEE FOR STANDARDIZATION
COMITÉ EUROPÉEN DE NORMALISATION
EUROPÄISCHES KOMITEE FÜR NORMUNG

CEN-CENELEC Management Centre: Avenue Marnix 17, B-1000 Brussels

© 2015 CEN All rights of exploitation in any form and by any means reserved worldwide for CEN national Members.

Ref. No. EN 4710-05:2015 E

Contents

Page

European foreword **3**

1 Scope **4**

2 Normative references **4**

3 Requirements **4**

4 Designation **6**

5 Marking **6**

6 Technical specification **7**

European foreword

This document (EN 4710-05:2015) has been prepared by the Aerospace and Defence Industries Association of Europe - Standardization (ASD-STAN).

After enquiries and votes carried out in accordance with the rules of this Association, this European Standard has received the approval of the National Associations and the Official Services of the member countries of ASD, prior to its presentation to CEN.

This European Standard shall be given the status of a national standard, either by publication of an identical text or by endorsement, at the latest by April 2016, and conflicting national standards shall be withdrawn at the latest by April 2016.

Attention is drawn to the possibility that some of the elements of this document may be the subject of patent rights. CEN [and/or CENELEC] shall not be held responsible for identifying any or all such patent rights.

According to the CEN-CENELEC Internal Regulations, the national standards organizations of the following countries are bound to implement this European Standard: Austria, Belgium, Bulgaria, Croatia, Cyprus, Czech Republic, Denmark, Estonia, Finland, Former Yugoslav Republic of Macedonia, France, Germany, Greece, Hungary, Iceland, Ireland, Italy, Latvia, Lithuania, Luxembourg, Malta, Netherlands, Norway, Poland, Portugal, Romania, Slovakia, Slovenia, Spain, Sweden, Switzerland, Turkey and the United Kingdom.

1 Scope

This European Standard specifies the dimensions, mass, tolerances and static values of catch spring for use in fuselage interior equipment and non-structural or secondary structural area.

This European Standard is to be used in conjunction with EN 4710-06 and EN 4710-07 as described in EN 4710-02.

The applicable temperature range is -55 °C to 85 °C.

2 Normative references

The following referenced documents are indispensable for the application of this document. For dated references, only the edition cited applies. For undated references, the latest edition of the referenced document (including any amendments) applies.

EN 2424, *Aerospace series — Marking of aerospace products*

EN 2516, *Aerospace series — Passivation of corrosion resisting steels and decontamination of nickel base alloys*

EN 4710-01, *Aerospace series — Quick release fastening systems for non-structural applications — Part 01: Technical specification*

EN 4710-02, *Aerospace series — Quick release fastening systems for non-structural applications — Part 02: Spring clamp stud combination*

EN 4710-06, *Aerospace series — Quick release fastening systems for non-structural applications — Part 06: Stud - quick-release and locking*

EN 4710-07, *Aerospace series — Quick release fastening systems for non-structural applications — Part 07: Retaining grommet*

EN 10132-4, *Cold rolled narrow steel strip for heat treatment — Technical delivery conditions — Part 4: Spring steels and other applications*

EN 10151, *Stainless steel strip for springs — Technical delivery conditions*

EN 22768-1:1993, *General tolerances — Part 1: Tolerances for linear and angular dimensions without individual tolerance indications (ISO 2768-1:1989)*

EN 22768-2:1993, *General tolerances — Part 2: Geometrical tolerances for features without individual tolerance indications (ISO 2768-2:1989)*

DIN 50979, *Metallic coatings — Electroplated coatings of zinc and zinc alloys on iron or steel with supplementary Cr(VI)-free treatment*

3 Requirements

3.1 Configuration, dimensions, tolerances and mass

The configuration, dimensions, tolerances and mass shall conform to Figure 1 and Table 1. Tolerances not specified, shall be in accordance with ISO 2768-mK (EN 22768-1:1993 and EN 22768-2:1993). Dimensions are unless otherwise specified per manufacturer's option.

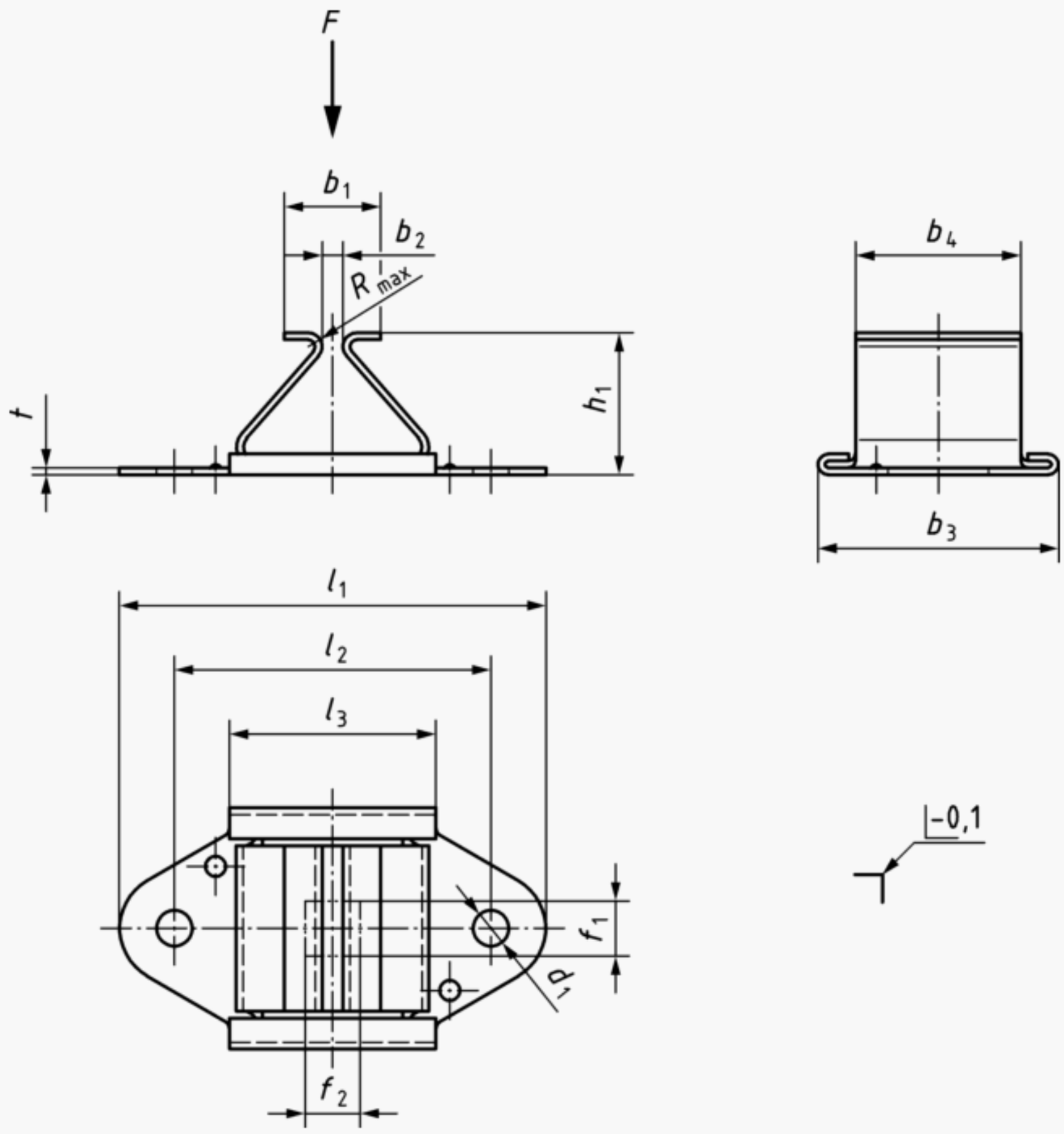

Key

f_1 tolerance range

f_2 tolerance range

F load direction

Figure 1 — Configuration spring clamp CSx

Table 1 — Dimensions and mass

Dimensions in millimetres

Type code	**Plate code** [a]	b_1 ± 0,4	b_2 ± 0,3	b_3	b_4	∅ d_1	h_1	f_1	f_2	l_1	l_2	l_3	t	$R_{max.}$	**Mass** approximate g
CSM	5	7,0	1,4	17,5	12	2,6	10,3	4	4	31,0	23,0	15,0	0,5	1,0	3,0

[a] Plate code is according to dimension t.

3.2 Mechanical characteristics

Ultimate loads, see Table 2.

Table 2 — Loads

Type code	Ultimate loads F N	Material code
CSM	900	A
		S

3.3 Material and surface treatment

Materials and finished shall be in accordance with the Table 3.

Table 3 — Materials and surface treatment

Material code	Material	Surface treatment
S	Stainless steel 1.4310 per EN 10151	Passivated per EN 2516
A	Alloy steel 1.0605 per EN 10132-4 or Alloy steel 1.1248 per EN 10132-4	Electro plated coating per DIN 50979

4 Designation

EXAMPLE

Description block	Identity block
SPRING CLAMP, TWO WAYS MOVABLE	**EN4710-05CSM5S**

Number of the basic standard

Standard family number

Type code (see Table 2)

Plate code (see Table 2)

Material code (see Table 3)

5 Marking

EN 2424, style F.

6 Technical specification

Required tests for acceptance and qualification shall be in accordance to Table 4.

Table 4 — Requirements, inspections and tests

Characteristic	Requirements	Requirements as per EN 4710-01	Inspections and tests as per EN 4710-01	A [a]	Q [b]
Materials	In accordance with Table 3.	4.1	5.4.1	X	X
Dimensions and masses	In accordance with Table 1.	4.2	5.4.2	X	X
Surface defects	Refer to EN 4710-01.	4.3.1	5.4.3.1	X	X
Surface treatment	In accordance with Table 3.	4.3.2	5.4.3.2	X	X
Ultimate tensile loads	In accordance with Table 2.	4.4.1	5.4.4.1	–	X
Corrosion resistance	Refer to EN 4710-01.	4.5	5.4.5	–	X
Functionality	Refer to EN 4710-01.	4.7.1	5.4.7.1	–	X
Endurance	Material code A: 1 500 cycles Material code S: 500 cycles.	4.7.2	5.4.7.2	–	X
Identification marking of the product	Refer to EN 4710-01.	4.8.1	5.4.8.1	X	X
Identification marking of the package	Refer to EN 4710-01.	4.8.2	5.4.8.2	X	X

[a] Acceptance test.

[b] Qualification test.

This page deliberately left blank

This page deliberately left blank

NO COPYING WITHOUT BSI PERMISSION EXCEPT AS PERMITTED BY COPYRIGHT LAW

British Standards Institution (BSI)

BSI is the national body responsible for preparing British Standards and other standards-related publications, information and services.

BSI is incorporated by Royal Charter. British Standards and other standardization products are published by BSI Standards Limited.

About us

We bring together business, industry, government, consumers, innovators and others to shape their combined experience and expertise into standards -based solutions.

The knowledge embodied in our standards has been carefully assembled in a dependable format and refined through our open consultation process. Organizations of all sizes and across all sectors choose standards to help them achieve their goals.

Information on standards

We can provide you with the knowledge that your organization needs to succeed. Find out more about British Standards by visiting our website at bsigroup.com/standards or contacting our Customer Services team or Knowledge Centre.

Buying standards

You can buy and download PDF versions of BSI publications, including British and adopted European and international standards, through our website at bsigroup.com/shop, where hard copies can also be purchased.

If you need international and foreign standards from other Standards Development Organizations, hard copies can be ordered from our Customer Services team.

Subscriptions

Our range of subscription services are designed to make using standards easier for you. For further information on our subscription products go to bsigroup.com/subscriptions.

With **British Standards Online (BSOL)** you'll have instant access to over 55,000 British and adopted European and international standards from your desktop. It's available 24/7 and is refreshed daily so you'll always be up to date.

You can keep in touch with standards developments and receive substantial discounts on the purchase price of standards, both in single copy and subscription format, by becoming a **BSI Subscribing Member**.

PLUS is an updating service exclusive to BSI Subscribing Members. You will automatically receive the latest hard copy of your standards when they're revised or replaced.

To find out more about becoming a BSI Subscribing Member and the benefits of membership, please visit bsigroup.com/shop.

With a **Multi-User Network Licence (MUNL)** you are able to host standards publications on your intranet. Licences can cover as few or as many users as you wish. With updates supplied as soon as they're available, you can be sure your documentation is current. For further information, email bsmusales@bsigroup.com.

Revisions

Our British Standards and other publications are updated by amendment or revision.

We continually improve the quality of our products and services to benefit your business. If you find an inaccuracy or ambiguity within a British Standard or other BSI publication please inform the Knowledge Centre.

Copyright

All the data, software and documentation set out in all British Standards and other BSI publications are the property of and copyrighted by BSI, or some person or entity that owns copyright in the information used (such as the international standardization bodies) and has formally licensed such information to BSI for commercial publication and use. Except as permitted under the Copyright, Designs and Patents Act 1988 no extract may be reproduced, stored in a retrieval system or transmitted in any form or by any means – electronic, photocopying, recording or otherwise – without prior written permission from BSI. Details and advice can be obtained from the Copyright & Licensing Department.

Useful Contacts:

Customer Services
Tel: +44 845 086 9001
Email (orders): orders@bsigroup.com
Email (enquiries): cservices@bsigroup.com

Subscriptions
Tel: +44 845 086 9001
Email: subscriptions@bsigroup.com

Knowledge Centre
Tel: +44 20 8996 7004
Email: knowledgecentre@bsigroup.com

Copyright & Licensing
Tel: +44 20 8996 7070
Email: copyright@bsigroup.com

BSI Group Headquarters

389 Chiswick High Road London W4 4AL UK

bsi.

...making excellence a habit.™