BS EN 60567:2011

BSI Standards Publication

Oil-filled electrical equipment — Sampling of gases and analysis of free and dissolved gases — Guidance

bsi.

...making excellence a habit.™

National foreword

This British Standard is the UK implementation of EN 60567:2011. It is identical to IEC 60567:2011. It supersedes BS EN 60567:2005 which is withdrawn.

The UK participation in its preparation was entrusted to Technical Committee GEL/10, Fluids for electrotechnical applications.

A list of organizations represented on this committee can be obtained on request to its secretary.

This publication does not purport to include all the necessary provisions of a contract. Users are responsible for its correct application.

© The British Standards Institution 2012

ISBN 978 0 580 69888 0

ICS 17.220.99; 29.035.99; 29.040.10

Compliance with a British Standard cannot confer immunity from legal obligations.

This British Standard was published under the authority of the Standards Policy and Strategy Committee on 29 February 2012.

Amendments issued since publication

Amd. No.	Date	Text affected

EUROPEAN STANDARD

NORME EUROPÉENNE

EUROPÄISCHE NORM

EN 60567

December 2011

ICS 29.040

Supersedes EN 60567:2005

English version

Oil-filled electrical equipment - Sampling of gases and analysis of free and dissolved gases - Guidance

(IEC 60567:2011)

Matériels électriques immergés - Echantillonnage de gaz et analyse des gaz libres et dissous - Lignes directrices (CEI 60567:2011)

Ölgefüllte elektrische Betriebsmittel – Probennahme von Gasen und Analyse freier und gelöster Gase – Anleitung (IEC 60567:2011)

This European Standard was approved by CENELEC on 2011-11-24. CENELEC members are bound to comply with the CEN/CENELEC Internal Regulations which stipulate the conditions for giving this European Standard the status of a national standard without any alteration.

Up-to-date lists and bibliographical references concerning such national standards may be obtained on application to the CEN-CENELEC Management Centre or to any CENELEC member.

This European Standard exists in three official versions (English, French, German). A version in any other language made by translation under the responsibility of a CENELEC member into its own language and notified to the CEN-CENELEC Management Centre has the same status as the official versions.

CENELEC members are the national electrotechnical committees of Austria, Belgium, Bulgaria, Croatia, Cyprus, the Czech Republic, Denmark, Estonia, Finland, France, Germany, Greece, Hungary, Iceland, Ireland, Italy, Latvia, Lithuania, Luxembourg, Malta, the Netherlands, Norway, Poland, Portugal, Romania, Slovakia, Slovenia, Spain, Sweden, Switzerland and the United Kingdom.

CENELEC

European Committee for Electrotechnical Standardization
Comité Européen de Normalisation Electrotechnique
Europäisches Komitee für Elektrotechnische Normung

Management Centre: Avenue Marnix 17, B - 1000 Brussels

© 2011 CENELEC - All rights of exploitation in any form and by any means reserved worldwide for CENELEC members.

Ref. No. EN 60567:2011 E

Foreword

The text of document 10/849/FDIS, future edition 4 of IEC 60567, prepared by IEC/TC 10 "Fluids for electrotechnical applications" was submitted to the IEC-CENELEC parallel vote and approved by CENELEC as EN 60567:2011.

The following dates are fixed:

• latest date by which the document has to be implemented at national level by publication of an identical national standard or by endorsement	(dop)	2012-08-24
• latest date by which the national standards conflicting with the document have to be withdrawn	(dow)	2014-11-24

This document supersedes EN 60567:2005.

EN 60567:2011 includes the following significant technical changes with respect to EN 60567:2005:

Since the publication of EN 60567:2005, CIGRE TF.D1.01.15 has made progress in several areas of dissolved gas analysis (DGA), notably

a) oil sampling,

b) laboratory analysis and solubility coefficients of gases in non-mineral oils,

c) calibration of the headspace gas extraction method,

d) more sensitive detectors for chromatography,

e) preparation of air-saturated standards and

f) evaluation of gas monitor readings.

These advances are included in EN 60567:2011.

Sampling of oil for DGA from oil-filled equipment has been moved from EN 60567 to EN 60475 as reflected in the revised title of this standard.

Attention is drawn to the possibility that some of the elements of this document may be the subject of patent rights. CENELEC [and/or CEN] shall not be held responsible for identifying any or all such patent rights.

Endorsement notice

The text of the International Standard IEC 60567:2011 was approved by CENELEC as a European Standard without any modification.

In the official version, for Bibliography, the following notes have to be added for the standards indicated:

[1] ISO/IEC 17025 NOTE Harmonized as EN ISO/IEC 17025.

[2] ISO 3675 NOTE Harmonized as EN ISO 3675.

Annex ZA
(normative)

Normative references to international publications with their corresponding European publications

The following referenced documents are indispensable for the application of this document. For dated references, only the edition cited applies. For undated references, the latest edition of the referenced document (including any amendments) applies.

NOTE When an international publication has been modified by common modifications, indicated by (mod), the relevant EN/HD applies.

Publication	Year	Title	EN/HD	Year
IEC 60296	-	Fluids for electrotechnical applications - Unused mineral insulating oils for transformers and switchgear	EN 60296	-
IEC 60475	2011	Method of sampling insulating liquids	EN 60475	2011
IEC 60599	-	Mineral oil-impregnated electrical equipment in service - Guide to the interpretation of dissolved and free gases analysis	EN 60599	-
ISO 5725	Series	Accuracy (trueness and precision) of measurement methods and results	-	-
ASTM D2780	-	Standard Test Method for Solubility of Fixed Gases in Liquids	-	-

CONTENTS

INTRODUCTION 7
1 Scope 9
2 Normative references 9
3 Sampling of gases from gas-collecting (Buchholz) relays 10
3.1 General remarks 10
3.2 Sampling of free gases by syringe 10
3.2.1 Sampling equipment 10
3.2.2 Sampling procedure 11
3.3 Sampling of free gases by displacement of oil 12
3.4 Sampling of free gases by vacuum 13
3.5 Sampling of oil from oil filled equipment 14
4 Labelling of gas samples 14
5 Sampling, labelling and transferring of oil from oil-filled equipment 14
5.1 Sampling and labelling of oil 14
5.2 Transfer of oil for DGA analysis 14
5.2.1 Transfer from oil syringes 14
5.2.2 Transfer from ampoules 15
5.2.3 Transfer from flexible metal bottles 15
5.2.4 Transfer from glass and rigid metal bottles 15
6 Preparation of gas-in-oil standards 15
6.1 General remark 15
6.2 First method: preparation of a large volume of gas-in-oil standard 15
6.2.1 Equipment 15
6.2.2 Procedure 16
6.2.3 Calculation 18
6.3 Second method: preparation of gas-in-oil standards in a syringe or a vial 18
6.3.1 Equipment 19
6.3.2 Procedure 20
7 Extraction of gases from oil 20
7.1 General remarks 20
7.2 Multi-cycle vacuum extraction using Toepler pump apparatus 21
7.2.1 Toepler pump extraction apparatus 21
7.2.2 Extraction procedure 24
7.3 Vacuum extraction by partial degassing method 25
7.3.1 General remark 25
7.3.2 Partial degassing apparatus 25
7.3.3 Extraction procedure 26
7.4 Stripping extraction method 26
7.4.1 Stripping apparatus 26
7.4.2 Outline of procedure 29
7.5 Headspace method 30
7.5.1 Principle of the method 30
7.5.2 Symbols and abbreviations 30
7.5.3 Headspace extraction apparatus 31
7.5.4 Headspace extraction procedure 35

7.5.5 Calibration of the headspace extractor 39
8 Gas analysis by gas-solid chromatography 41
8.1 General remarks 41
8.2 Outline of suitable methods using Table 4 42
8.3 Apparatus 42
8.3.1 Gas chromatograph 42
8.3.2 Columns 44
8.3.3 Carrier gas 44
8.3.4 Detectors 44
8.3.5 Methanator 44
8.3.6 Cold trap 44
8.3.7 Integrator and recorder 44
8.4 Preparation of apparatus 45
8.5 Analysis 45
8.6 Calibration of the chromatograph 45
8.7 Calculations 46
9 Quality control 46
9.1 Verification of the entire analytical system 46
9.2 Limits of detection and quantification 47
9.3 Repeatability, reproducibility and accuracy 47
9.3.1 General remark 47
9.3.2 Repeatability 48
9.3.3 Reproducibility 48
9.3.4 Accuracy 48
10 Report of results 49
Annex A (informative) Correction for incomplete gas extraction in partial degassing method by calculation 51
Annex B (informative) Mercury-free and shake test versions of the standard extraction methods 53
Annex C (informative) Preparation of air-saturated standards 55
Annex D (informative) Correction for gas bubbles in syringes and air gap in rigid bottles 56
Annex E (informative) Procedure for comparing gas monitor readings to laboratory results 57
Bibliography 58

Figure 1 – Sampling of gas by syringe 11
Figure 2 – Sampling of free gases by oil displacement 12
Figure 3 – Sampling of free gases by vacuum 13
Figure 4 – First method of preparing gas-in-oil standards 17
Figure 5 – Second method for preparing gas-in-oil standards 19
Figure 6 – Example of a Toepler pump extraction apparatus 23
Figure 7 – Types of glass strippers 27
Figure 8 – Stainless steel stripper 28
Figure 9 – Schematic arrangement for connecting an oil stripper to a gas chromatograph 29
Figure 10 – Schematic representation of headspace sampler 30

Figure 11 – Vial filled with water 32
Figure 12 – Revolving table 34
Figure 13 – Schematic arrangement for gas chromatography 43
Figure B.1 – Schematic representation of methods in Annex B 54

Table 1 – Information required for gas samples 14
Table 2 – Examples of headspace operating conditions 35
Table 3 – Headspace partition coefficients at 70 °C in mineral insulating oil 40
Table 4 – Examples of gas chromatographic operating conditions 41
Table 5 – Required limits of detection in oil 47
Table 6 – Examples of accuracy of extraction methods 49
Table A.1 – Examples of solubility coefficients a_i (at 25 °C) reported by CIGRE TF D1.01.15 51
Table C.1 – Examples of solubility values of air for different oil types 55
Table C.2 – Examples of temperature variations for oxygen and nitrogen solubility in mineral oil 55

INTRODUCTION

Gases may be formed in oil-filled electrical equipment due to natural ageing but also, to a much greater extent, as a result of faults.

Operation with a fault may seriously damage the equipment, and it is valuable to be able to detect the fault at an early stage of development.

Where a fault is not severe, the gases formed will normally dissolve in the oil, with a small proportion eventually diffusing from the liquid into any gas phase above it. Extracting dissolved gas from a sample of the oil and determining the amount and composition of this gas is a means of detecting such faults, and the type and severity of any fault may often be inferred from the composition of the gas and the rate at which it is formed.

In the case of a sufficiently severe fault, free gas will pass through the oil and collect in the gas-collecting (Buchholz) relay if fitted; if necessary, this gas may be analysed to assist in determining the type of fault that has generated it. The composition of gases within the bubbles changes as they move through the oil towards the gas-collecting relay.

This can be put to good use, as information on the rate of gas production may often be inferred by comparing the composition of the free gases collected with the concentrations remaining dissolved in the liquid.

The interpretation of the gas analyses is the subject of IEC 60599.

These techniques are valuable at all stages in the life of oil-filled equipment. During acceptance tests on transformers in the factory, comparison of gas-in-oil analyses before, during and after a heat run test can show if any hot-spots are present, and similarly analysis after dielectric testing can add to information regarding the presence of partial discharges or sparking. During operation in the field, the periodic removal of an oil sample and analysis of the gas content serve to monitor the condition of transformers and other oil-filled equipment.

The importance of these techniques has led to the preparation of this standard, to the procedures to be used for the sampling, from oil-filled electrical equipment, of gases and oils containing gases, and for subsequent analysis.

NOTE Methods described in this standard apply to insulating oils, since experience to date has been almost entirely with such oils. The methods may also be applied to other insulating liquids, in some cases with modifications.

General caution, health, safety and environmental protection

This International Standard does not purport to address all the safety problems associated with its use. It is the responsibility of the user of the standard to establish appropriate health and safety practices and determine the applicability of regulatory limitations prior to use.

The insulating oils which are the subject of this standard should be handled with due regard to personal hygiene. Direct contact with the eyes may cause irritation. In the case of eye contact, irrigation with copious quantities of clean running water should be carried out and medical advice sought. Some of the tests specified in this standard involve the use of processes that could lead to a hazardous situation. Attention is drawn to the relevant standard for guidance.

Mercury presents an environmental and health hazard. Any spillage should immediately be removed and be properly disposed of. Consult local regulations for mercury use and handling. Mercury-free methods may be requested in some countries.

Environment

This standard is applicable to insulating oils, chemicals and used sample containers.

Attention is drawn to the fact that, at the time of writing of this standard, many insulating oils in service are known to be contaminated to some degree by PCBs. If this is the case, safety countermeasures should be taken to avoid risks to workers, the public and the environment during the life of the equipment, by strictly controlling spills and emissions. Disposal or decontamination of these oils should be carried out strictly according to local regulations. Every precaution should be taken to prevent release of insulating oil into the environment.

OIL-FILLED ELECTRICAL EQUIPMENT – SAMPLING OF GASES AND ANALYSIS OF FREE AND DISSOLVED GASES – GUIDANCE

1 Scope

This International Standard deals with the techniques for sampling free gases from gas-collecting relays from power transformers. Three methods of sampling free gases are described.

The techniques for sampling oil from oil-filled equipment such as power and instrument transformers, reactors, bushings, oil-filled cables and oil-filled tank-type capacitors are no longer covered by this standard, but are instead described in 4.2 of IEC 60475:2011.

Before analysing the gases dissolved in oil, they are first extracted from the oil. Three basic methods are described, one using extraction by vacuum (Toepler and partial degassing), another by displacement of the dissolved gases by bubbling the carrier gas through the oil sample (stripping) and the last one by partition of gases between the oil sample and a small volume of the carrier gas (headspace). The gases are analysed quantitatively after extraction by gas chromatography; a method of analysis is described. Free gases from gas-collecting relays are analysed without preliminary treatment.

The preferred method for assuring the performance of the gas extraction and analysis equipment, considered together as a single system, is to degas samples of oil prepared in the laboratory and containing known concentrations of gases ("gas-in-oil standards") and quantitatively analyse the gases extracted. Two methods of preparing gas-in-oil standards are described.

For daily calibration checks of the chromatograph, it is convenient to use a standard gas mixture containing a suitable known amount of each of the gas components to be in a similar ratio to the common ratios of the gases extracted from transformer oils.

The techniques described take account, on the one hand, of the problems peculiar to analyses associated with acceptance testing in the factory, where gas contents of oil are generally very low and, on the other hand, of the problems imposed by monitoring equipment in the field, where transport of samples may be by un-pressurized air freight and where considerable differences in ambient temperature may exist between the plant and the examining laboratory.

2 Normative references

The following documents, in whole or in part, are normatively referenced in this document and are indispensable for its application. For dated references, only the edition cited applies. For undated references, the latest edition of the referenced document (including any amendments) applies.

IEC 60296, *Fluids for electrotechnical applications – Unused mineral insulating oils for transformers and switchgear*

IEC 60475:2011, *Method of sampling insulating liquids*

IEC 60599, *Mineral oil-impregnated electrical equipment in service – Guide to the interpretation of dissolved and free gases analysis*

ISO 5725 (all parts), *Accuracy (trueness and precision) of measurement methods and results*

ASTM D2780, *Standard Test Method for Solubility of Fixed Gases in Liquids*

3 Sampling of gases from gas-collecting (Buchholz) relays

3.1 General remarks

It is important to bear in mind that receiving a qualitative and a representative sample is crucial for obtaining a reliable diagnosis of the electrical equipment. Even the most sophisticated extraction or diagnosis methods cannot overcome faulty samples.

Gas samples from relays should be taken from the equipment with the minimum delay after gas accumulation has been signalled. Changes in composition caused by the selective re-absorption of components may occur if free gases are left in contact with oil.

Certain precautions are necessary when taking gas samples. The connection between the sampling device and the sampling vessel shall avoid the ingress of air. Temporary connections should be as short as possible. Any rubber or plastic tubing used should have been proved to be impermeable to gases.

Gas samples should be properly labelled (see Clause 4) and analysed without undue delay to minimize hydrogen loss (for example, within a maximum period of one week).

Oxygen, if present in the gas, may react with any oil drawn out with the sample. Reaction is delayed by excluding light from the sample, for example, by wrapping the vessel in aluminium foil or suitable opaque material.

Of the three methods described below, the syringe method is recommended. The other two methods are alternatives to be used exclusively in case of serious hindrance.

Sampling into a sampling tube by liquid displacement using transformer oil as a sealing liquid is simple, but the different solubilities of the gas components may need to be taken into account if the gas quantity is such that some oil remains in the tube.

The vacuum method requires skill to avoid contaminating the sample by leakage of air into the system. It is particularly true where the gas to be sampled may be at less than atmospheric pressure (for example, some sealed transformers).

3.2 Sampling of free gases by syringe

3.2.1 Sampling equipment

NOTE Figures in brackets refer to those circled numbers in the relevant figure.

See Figure 1. The equipment shall be as follows:

a) Impermeable oil-resistant plastic or rubber tubing (3) provided with a connecter to fit onto a suitable sampling connection of the gas-collecting relay. To avoid cross-contamination, the tubing should be used only once.

b) Gas-tight syringes of suitable volume (1) (25 ml to 250 ml). Medical or veterinary quality glass syringes with ground-in plungers may be suitable; alternatively, syringes with oil-proof seals may be used. The syringe should be fitted with a cock enabling it to be sealed. It is often convenient to use the same syringes for both gas sampling and for oil sampling (see 4.2.2 of IEC 60475:2011).

The gas tightness of a syringe may be tested by storing an oil sample containing a measurable quantity of hydrogen for at least two weeks and analysing aliquots for hydrogen at the beginning and end of the period. An acceptable syringe will permit losses of hydrogen of less than 2,5 % per week. General experience suggests that all-glass syringes leak less than those using plastic seals. Improvement of the gas tightness may be obtained by the use of a lubricant such as a light grease or transformer oil.

It is a good practice to test the integrity of syringes and valve system before the sampling. A recommended procedure appears in Annex B of IEC 60475:2011.

c) Transport containers should be designed to hold the syringe firmly in place during transport, but allow the syringe plunger freedom to move, and prevent its tip from contacting the container, whatever its position during transportation.

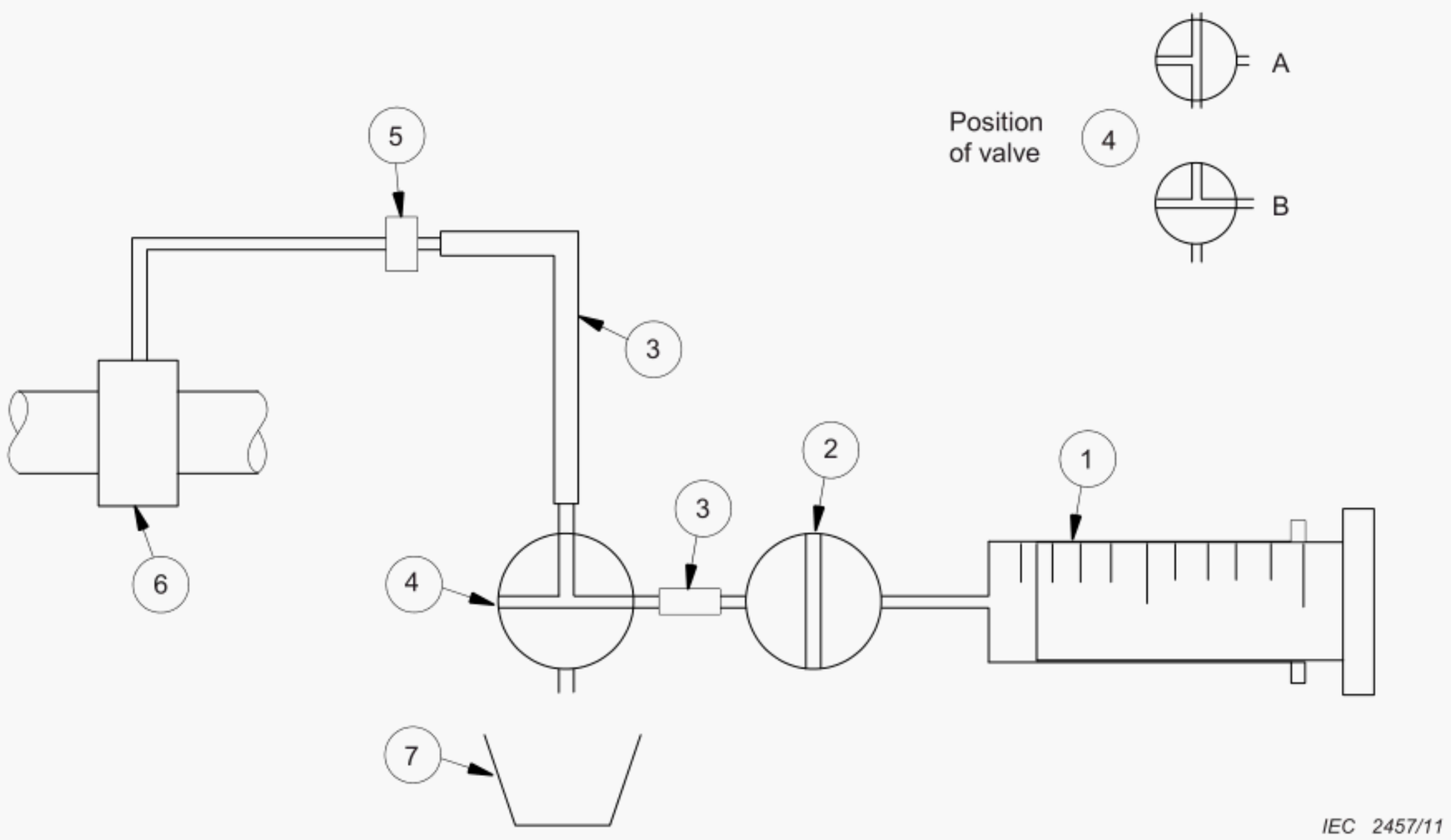

Key

1 syringe
2 stopcock
3 rubber connecting tubing
4 three-way valve
5 equipment sampling valve
6 gas-collecting relay valve
7 waste vessel

Figure 1 – Sampling of gas by syringe

3.2.2 Sampling procedure

The apparatus is connected as shown in Figure 1. The connections should be as short as possible and filled with oil at the start of sampling.

The sampling valve (5) is opened. If sampling from a gas-collecting relay on a transformer fitted with a conservator, a positive pressure will exist; the three-way valve (4) is carefully turned to position A and the oil in the connecting tubing (3) allowed to flow to waste (7). When gas reaches the three-way valve (4), the latter is turned to position B to connect the pre-lubricated syringe (1). The stopcock (2) is then opened and the syringe allowed to fill under the hydrostatic pressure, taking care that its plunger is not expelled. When a sufficient sample

has been taken, the stopcock (2) and sampling valve (5) are closed and the apparatus is disconnected.

The oil in the syringe is expelled by inverting the syringe and applying gentle pressure to the plunger.

Label carefully the sample (see Clause 4).

3.3 Sampling of free gases by displacement of oil

This method is reliable only where the gas sample is at or above atmospheric pressure. The apparatus is shown in Figure 2.

The sampling tube (5), typically of 100 ml capacity, is preferably of glass since the operator can then see how much oil remains in it during gas sampling. The sampling tube is filled with oil from the transformer on site. Before being used as described below, the connecting tube (3) should also be filled with oil.

The open end of the connecting tube (3) is fitted onto the gas-sampling valve (2). The sampling valve and inlet stopcock of the sampling tube are opened. The sampling tube is inclined so that its closed end is the lowest point. The outlet stopcock on the sampling tube is then opened, allowing oil to run out to waste (6), drawing first any oil from the connection between relay and sampling valve, and the gas from the relay, into the sampling tube.

Sampling is complete when the gas-collecting relay is completely filled with oil or when nearly all oil has gone from the sampling tube.

Both stopcocks (4) on the sampling tube and the sampling valve (2) are closed and then the connections removed.

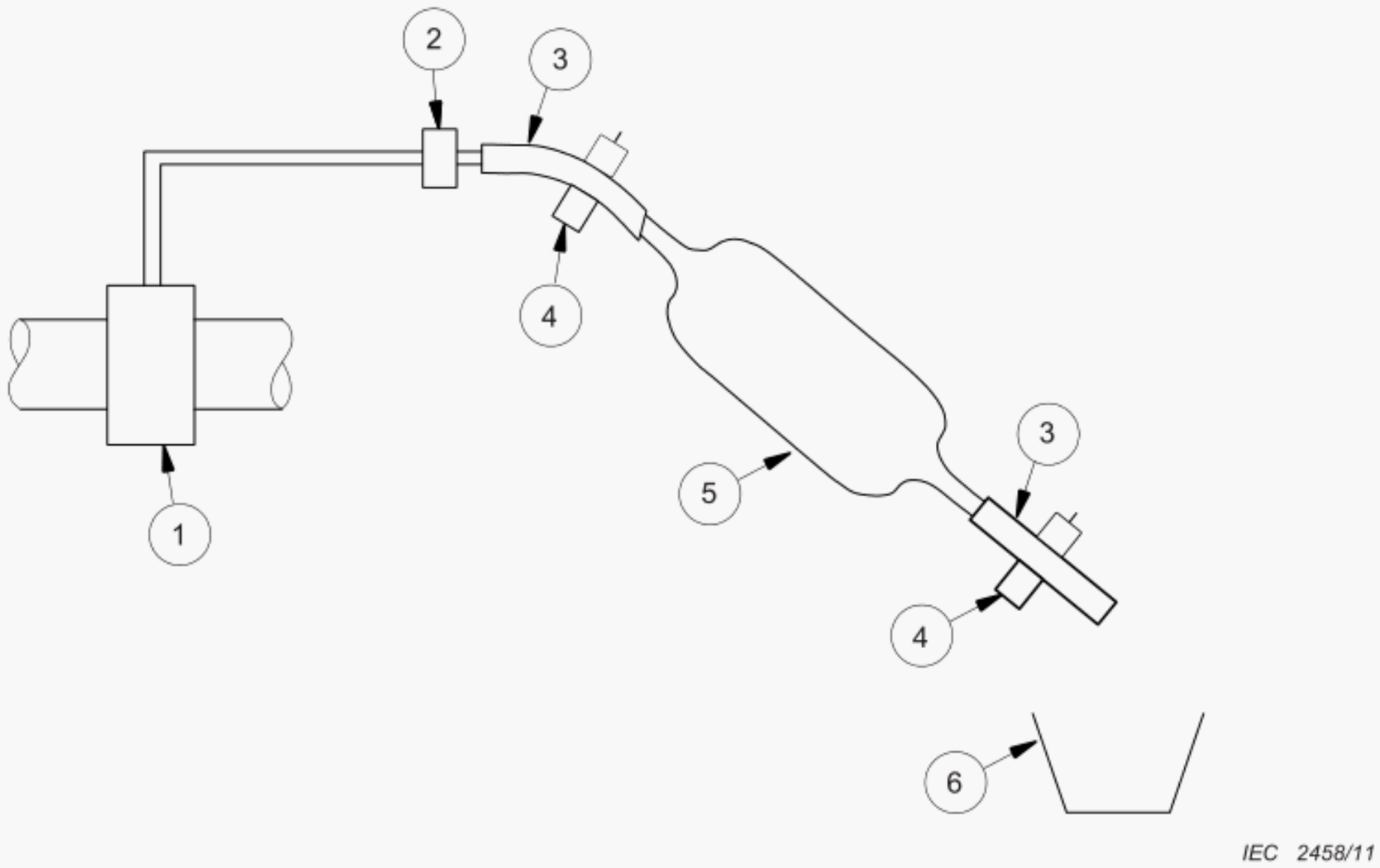

Key

1	gas collecting relay valve	4	stopcock
2	equipment sampling valve	5	sampling tube
3	oil-resistant connecting tubing	6	waste vessel

Figure 2 – Sampling of free gases by oil displacement

3.4 Sampling of free gases by vacuum

The apparatus is connected as shown in Figure 3. With the equipment sampling valve closed, stopcocks (1), (2) and (10) open, and the three-way valve (4) turned to position A, the vacuum pump (12) is allowed to evacuate the connecting tubing, the trap and the sampling vessel.

A satisfactory vacuum will be below 100 Pa. The system should be checked for leaks by closing the pump suction stopcock (10) and observing that no appreciable change in vacuum occurs. Over a time equal to that which will be taken for sampling, the pressure should not increase by more than 100 Pa. Similarly, the stopcock (1) on the sampling tube should be vacuum tight to the same degree over several weeks.

If the connecting tubing between the equipment sampling valve (5) and the gas-collecting relay is filled with oil, the three-way valve (4) is turned to position (B). The equipment sampling valve (5) is carefully opened and oil allowed to flow into the trap (9). When the end of the oil stream is observed to reach the three-way valve (4), it is turned to position D to evacuate the oil from it. Thereafter, valve (4) is turned to position C. When sampling is complete, stopcock (1) is closed first, then the equipment sampling valve (5) closed and the apparatus disconnected.

If the connecting tubing between the equipment and the sampling valve is empty of oil, the procedure for draining oil is omitted and the three-way valve (4) used in position C after evacuating and testing that the apparatus is leak tight.

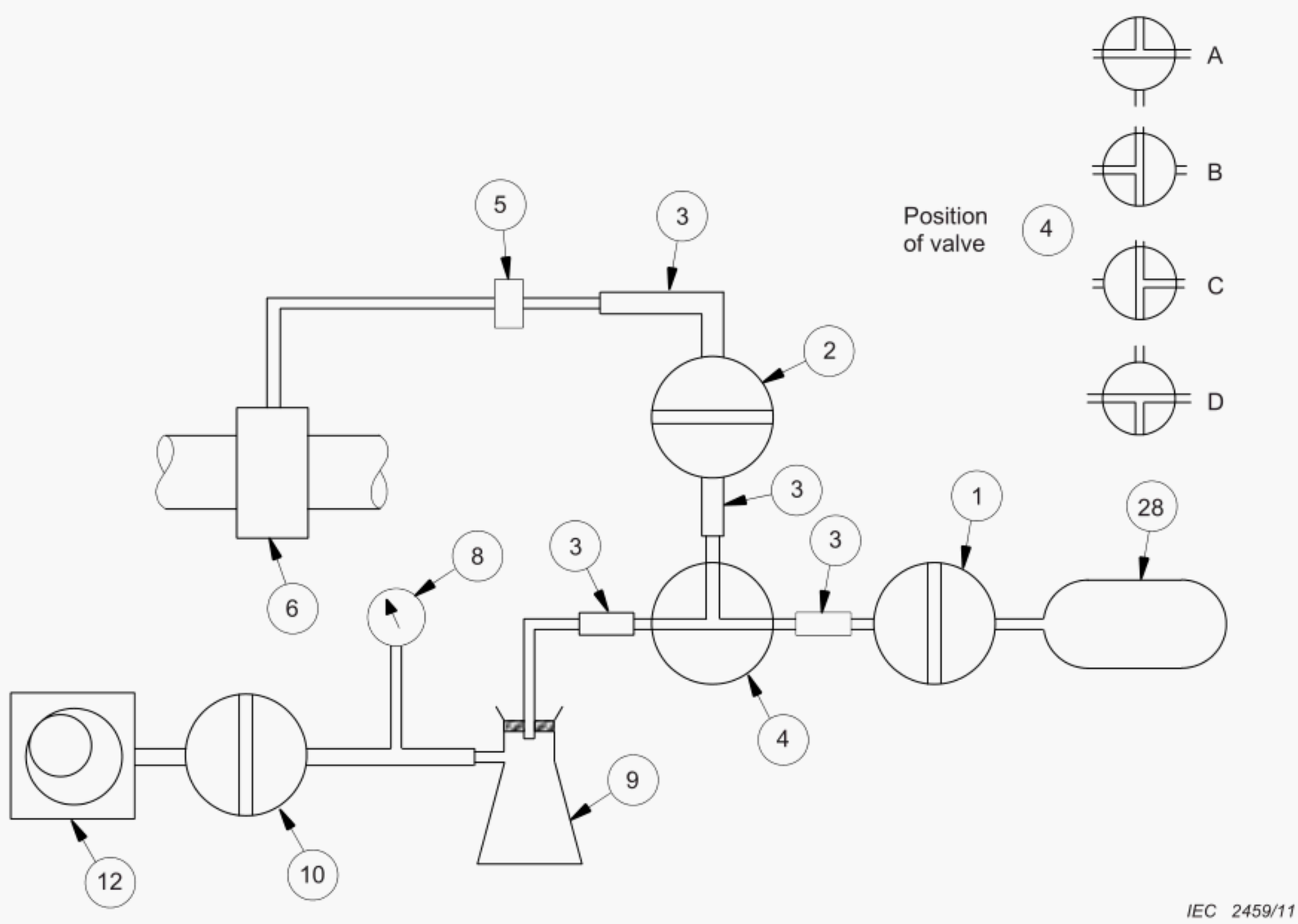

Key

1	vacuum tight stopcock	8	vacuum gauge
2	vacuum tight stopcock	9	trap
3	rubber connecting tubing	10	vacuum tight stopcock
4	vacuum tight three-way valve	12	vacuum pump
5	equipment sampling valve	28	sampling tube
6	gas collecting relay valve		

Figure 3 – Sampling of free gases by vacuum

3.5 Sampling of oil from oil filled equipment

See 4.2 to 4.4 of IEC 60475:2011.

4 Labelling of gas samples

Gas samples should be properly labelled before dispatch to the laboratory.

The following information, as shown in Table 1, is necessary (whenever it is known).

Table 1 – Information required for gas samples

Transformer	Sampling
Customer	Sampling date and time following a gas alarm
Location	Sampling point
Identification number	Sampling person
Manufacturer	Reason for analysis
General type (power, instrument or industrial)	Transformer non-energized, off-load energized or on-load
Rated MVA	
Voltage ratio	
Type and location of OLTC	
Date of commissioning	
Oil	
Type of oil (mineral or non-mineral)	Weight (or volume) of oil
Product name	Date of last oil treatment

The following additional information is desirable:

– ambient temperature, reading of MVA or load current or percentage load, operation of pumps, mode of communication of its tap-changer with the main tank, oil preservation system (conservator, nitrogen blanket, etc.), and any changes in operational conditions or any maintenance carried out since last sampling;

– time of sampling where more than one sample is taken.

5 Sampling, labelling and transferring of oil from oil-filled equipment

5.1 Sampling and labelling of oil

Consult 4.2 to 4.4 of IEC 60475:2011 for sampling equipment, sampling procedures and labelling to be used.

5.2 Transfer of oil for DGA analysis

5.2.1 General

For transferring oil from its sample container into the gas extraction vessels of Article 7, the following procedures should be used:

5.2.2 Transfer from oil syringes

Introduce a portion of the oil sample in the syringe into the gas extraction vessel by turning the three-way valve of the syringe to position B of Figure 5 of IEC 60475:2011.

5.2.3 Transfer from ampoules

Attach the ampoule in the vertical position. Install a three-way plastic valve between the bottom plastic tubing of the ampoule and another piece of plastic tubing going to a waste oil container. Attach a glass syringe to the three-way plastic valve. Open the upper cock then the lower cock of the ampoule. Fill the syringe with oil following procedures indicated in 4.2.2.2 of IEC 60475:2011. Transfer a portion of the oil sample in the syringe into the gas extraction vessel as indicated in 5.2.2 above.

5.2.4 Transfer from flexible metal bottles

Open the screw cap of the bottle, introduce a long needle down to the bottom of the bottle, attach a glass syringe with a three-way valve to the needle and gently (to avoid creating gas bubbles due to negative pressure) draw a sample of oil into the syringe. Detach the three-way valve from the needle and invert the syringe to expel any gas bubble introduced in the oil. Then introduce a portion of the oil sample in the syringe into the gas extraction chamber as indicated in 5.2.2 above. Alternatively, a piece of tubing can be used to draw oil directly into the gas extraction vessel (Toepler or partial degassing) under vacuum.

The first sample taken from the bottle should always be used for DGA analysis. No other sample should be taken for DGA analysis, since significant gas loss may occur into the headspace of the bottle.

5.2.5 Transfer from glass and rigid metal bottles

The procedure used for flexible metal bottles in 5.2.4 is suitable for glass and rigid metal bottles.

6 Preparation of gas-in-oil standards

6.1 General remark

As noted in Clause 1, the preferred method of assuring the performance of the entire system for gas extraction and analysis is to analyse oils containing known concentrations of gases (gas-in-oil standards).

Two methods of preparing gas-in-oil standards are described below, a general method and a simpler method. The first method has the benefit of producing much larger quantities of oil.

NOTE If gas-in-oil standards are commercially available they can be used, provided they fulfil quality assurance requirements.

6.2 First method: preparation of a large volume of gas-in-oil standard

6.2.1 Equipment

A suitable apparatus design consists of (see Figures 4a, 4b, 4c):

- a magnetic stirrer (12);
- a 5 l oil vessel (13) equipped with three side-arm outlets, two of which are fitted with high-vacuum stopcocks (1) and (2) and one with a rubber septum (16);
- a 6 l reservoir (14) equipped with a high-vacuum stopcock (3) connected with a 75 ml splash bulb (15) and a high-vacuum stopcock (4);
- a mercury displacement system (17) consisting of two 500 ml mercury glass bulbs connected with a high-vacuum oil-resistant flexible rubber tubing.

The gas-injection system (Figures 4e to 4g) consists of

- a set of gas tight syringes of appropriate volumes (18),

– a plastic three-way valve of standard type (7), modified to minimize dead volume by inserting pieces of stainless steel tubing (approximately 0,4 mm inner diameter (ID) and 1,5 mm outer diameter (OD)) into the inner branches and connected to a gas-injecting needle (10) (approximately 10 cm long, 0,25 mm OD) to go through the rubber septum into the oil flask (16),

– gas cylinders equipped with a pressure reducer and a valve (20),

NOTE 1 Gas cylinders containing each of the individual gases to be injected can be used. Ready-made mixtures of these gases can also be obtained from some gas suppliers.

– a length of oil-resistant flexible tubing connecting the gas cylinder to the three-way valve (7) and incorporating a hypodermic needle (approximately 0,3 mm ID and 0,6 mm OD). The latter acts as a leak to a water bubbler (21) which is used to check the absence of back diffusion.

NOTE 2 Replace the length of tubing connecting the gas cylinder to the three-way valve after each gas change.

The oil sampling system (Figures 4h to 4k) consists of glass syringes (19) of suitable capacity equipped with two three-way plastic valves (8)) and (9) and an oil-extracting needle (11) (approximately 0,6 mm ID, 1,0 mm OD and 120 mm long).

6.2.2 Procedure

NOTE Figures in brackets refer to those circled numbers in Figures 4a to 4k. The positions A to D of the three-way valves (7, 8 and 9) are illustrated in Figure 4d.

6.2.2.1 Degassing the oil

a) Thoroughly clean all the glassware before assembling.

b) Secure the rubber septum and the flexible connections with pieces of twisted metal wire.

c) Clean, if necessary, approximately 1 l of mercury with pentane and filter through a finely pierced filter paper.

d) Adapt the oil reservoir (14), the splash bulb (15) and stopcocks (4) to the 5 l vessel (13). Connect the system to the vacuum pump (V) and evacuate the splash bulb (15) and the 5 l oil vessel (13) by opening stopcocks (2) and (4).

e) Fill the oil reservoir (14) with mineral insulating oil complying with IEC 60296 and allow oil to flow slowly through stopcock (3) into the 5 l vessel (13) until it is full. Then close the stopcock (2) and remove the oil reservoir (14) and the splash bulb.

NOTE If the procedure is followed carefully (filling time about 4 h) the oil in the vessel will be virtually gas-free.

f) Turn the oil vessel to bring it into the position shown in Figure 4c. Place a wet cloth over it to prevent its temperature rising and attach the mercury displacement system (17) to stopcock (1). Introduce 750 ml of mercury into the system with stopcock (6) closed.

g) Connect the system to the vacuum (V), open the stopcock (5) and evacuate the section between stopcocks (1) and (6). Open the stopcock (6) to allow mercury to rise up to stopcocks (1) and (5), and then close stopcock (5). Raise the left bulb of the system (see Figure 7c) so that the mercury level is above the oil flask. Open the stopcock (1). Remove the wet cloth and switch on the magnetic stirrer (12).

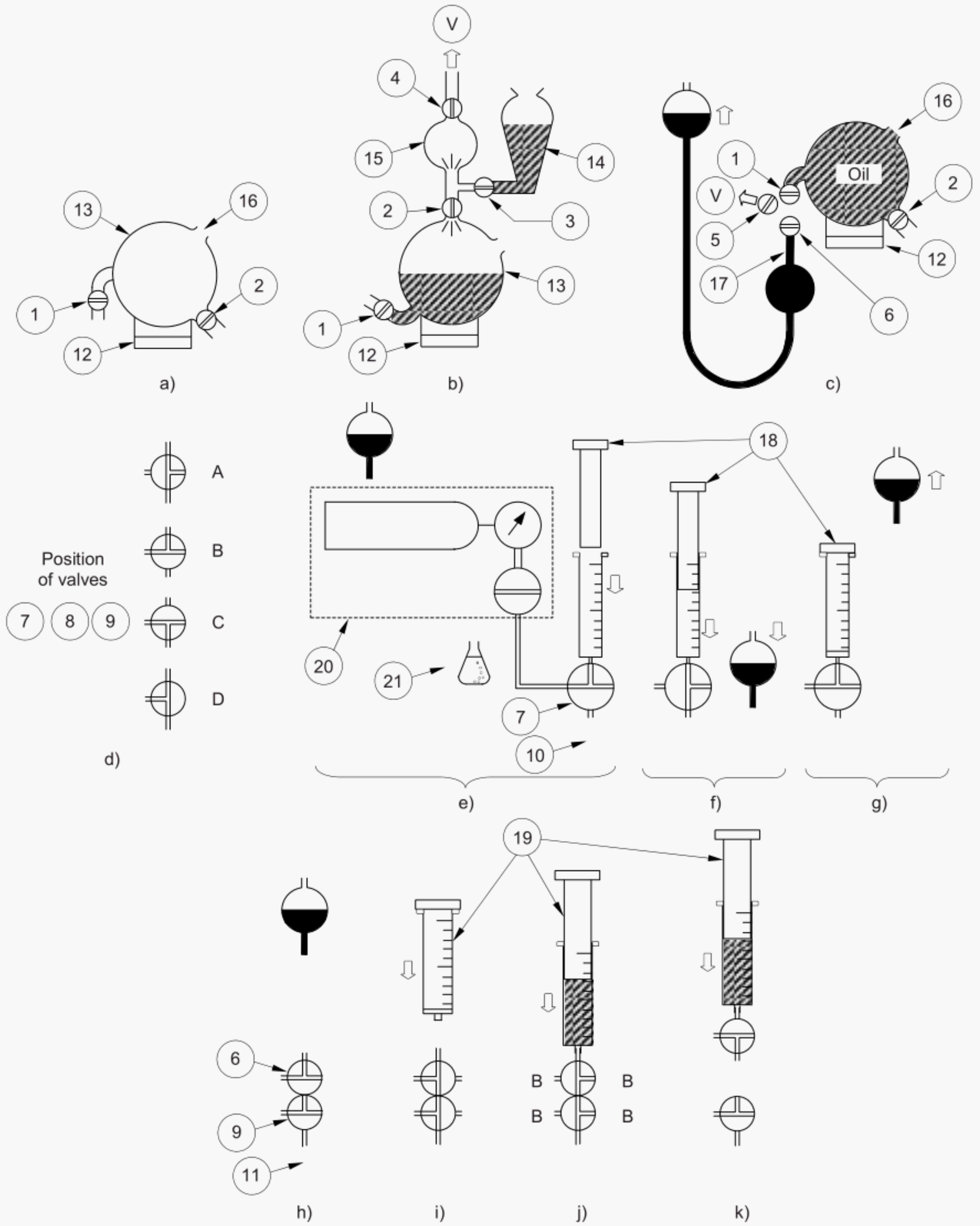

Key

1	vacuum stopcocks	9	three-way valves	17	mercury displacement system
2	vacuum stopcocks	10	gas-injecting needle	18	precision gas-tight syringe
3	vacuum stopcocks	11	oil-sampling needle	19	glass syringe
4	vacuum stopcocks	12	magnetic stirrer	20	gas cylinder with pressure reducer and valve
5	vacuum stopcocks	13	5 l oil vessel	21	leak to water bubbler
6	vacuum stopcocks	14	6 l oil vessel	V	connection to vacuum pump
7	three-way valves	15	75 ml splash bubble		
8	three-way valves	16	rubber septum		

Figure 4 – First method of preparing gas-in-oil standards

6.2.2.2 Preparation of gas-in-oil standards

See Figures 4c to 4g.

a) To inject the gases, attach the modified three-way valve (7), in position B, to the gas-injecting needle (10). Then push the needle through the rubber septum (16) into the oil. Turn the three-way valve to position D to purge the needle and valve with oil, then turn it to position B. Attach to valve (7) the barrel of a precision calibrated gas-tight syringe (18) of appropriate volume (precision within 1 %) and the gas cylinder connecting tubing (see Figure 4e). Allow a gentle flow of gas to flush the barrel, then slowly push the plunger several times into the barrel, finally down to the volume of gas to be injected, making sure there is continuous bubbling through the needle leak (21).

b) Switch valve (7) to the injection position A, lower the mercury level below the needle tip, and push the plunger to inject the gas volume into the oil. Switch valve (7) to position B and raise the left mercury bulb above the oil vessel.

c) Repeat the same procedure with each of the gases to be dissolved then remove the gas needle and valve (7).

When all the gases are dissolved, switch off the magnetic stirrer. Record the atmospheric pressure and temperature.

NOTE Instead of adding individual gases, it is more convenient to use a standard gas mixture, preferably containing all the gases listed in 8.1, in proportions representative of those found in the sampled oil.

6.2.2.3 Sampling of gas-in-oil standards

See Figures 4h to 4k.

a) To remove oil samples from the 5 l vessel (13), attach two three-way valves (8) and (9) turned in position B, according to Figure 4b, to the liquid-withdrawing needle (11) and push the needle through the rubber septum (16). With the mercury level up, switch valves (8) and (9) to the draw-off position D to purge them with oil (see Figure 4i).

b) Attach a syringe (19) and turn both valves (8) and (9) to position A, and draw out a suitable volume of oil (see Figure 4j). Then turn valve (8) to position C and valve (9) to position B and remove the syringe together with valve (8) (see Figure 4k).

To remove more oil, additional mercury shall be added to the mercury displacement system.

6.2.3 Calculation

Calculate the concentration of each gas “i” dissolved as follows:

$$C_i = V_i / V \times 10^6$$

where

C_i is the concentration of gas “i”, in µl/l;

V_i is the volume of gas “i” injected, corrected to 20 °C and 101,3 kPa in ml;

V is the exact volume of oil in the 5 l oil flask, in ml.

6.3 Second method: preparation of gas-in-oil standards in a syringe or a vial

See Figures 5a to 5f.

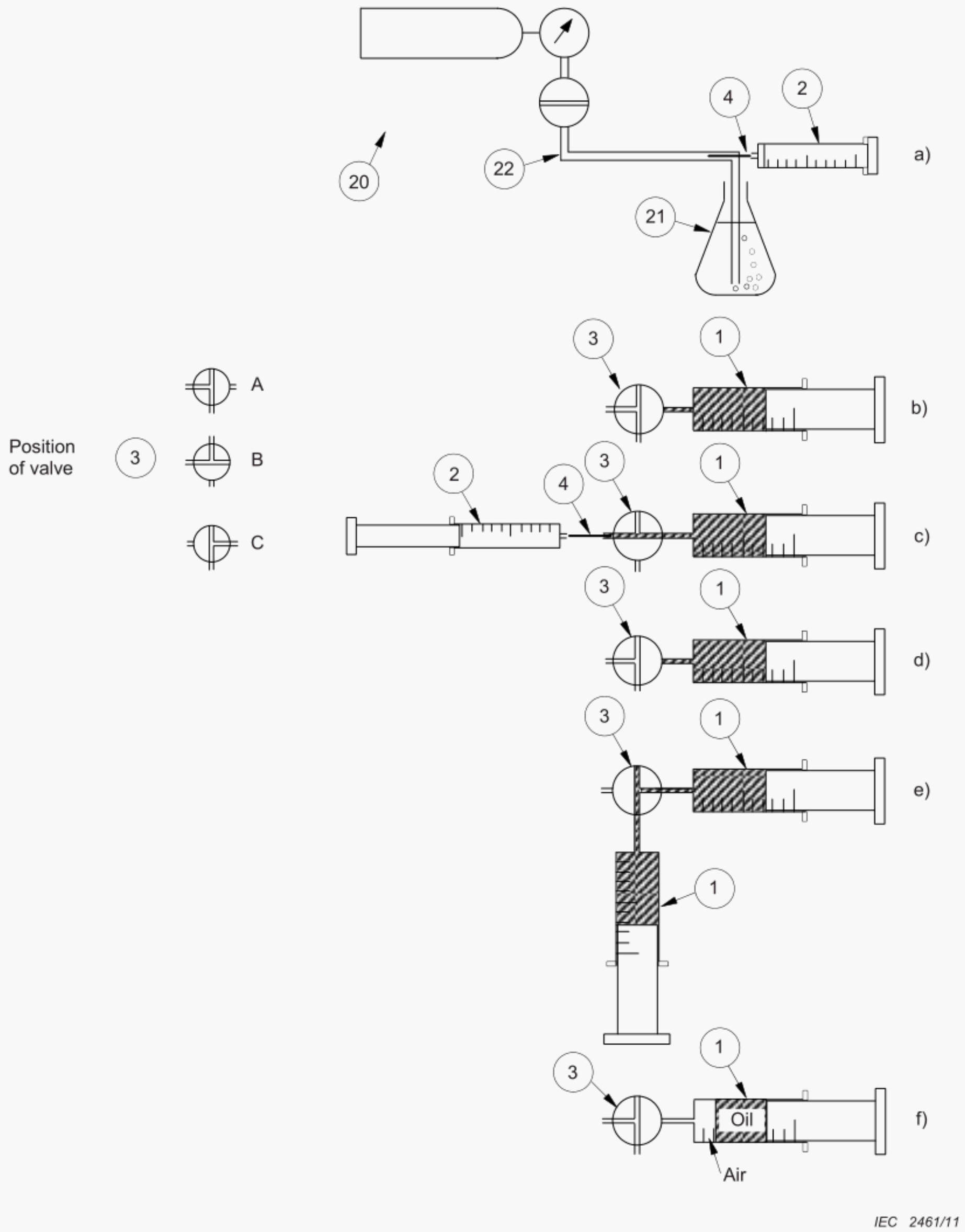

Key

1 glass syringe
2 precision gas-tight syringe
3 three-way valve
4 gas-injecting needle
20 gas bottle fitted with a pressure reducer and a valve
21 leak to water bubbler
22 silicone rubber tubing

Figure 5 – Second method for preparing gas-in-oil standards

6.3.1 Equipment

Equipment consists of

– a set of gas-tight syringes of appropriate volume (2),

– a set of glass syringes of appropriate volume (1),
– a set of gas-injecting needles (4),
– three-way plastic valves (3),
– gas cylinders equipped with a pressure reducer and a valve (20).

NOTE Gas cylinders containing each of the individual gases to be injected may be used. Ready-made mixtures of these gases can also be obtained from some gas suppliers.

6.3.2 Procedure

a) Bubble argon through 1 l of oil for 1 h under agitation, adjusting gas flow to maintain agitation of the oil in order to purge all the other dissolved gases. Degas this argon-saturated oil under a vacuum down to 1 Pa over an 8 μm-filter, in a 2 l vessel (residual contents of 500 μl/l O_2 and 2 000 μl/l N_2 are acceptable). When the oil is completely degassed, break the vacuum with argon up to 20 kPa.

b) Weigh a 100 ml glass syringe containing 10 ml of glass beads. Connect the syringe to the bottom of the 2 l vessel and purge the syringe twice with 20 ml of oil. Make sure the cylinder and plunger are completely wetted with oil. Fill the syringe with 90 ml of degassed oil.

c) Connect a gas-tight syringe of the required volume with a needle long enough to introduce a gas mixture in the syringe cylinder part, for instance of 115 mm length, to a cylinder containing a standard gas mixture, and purge 4 times with the standard gas. Fill the syringe with a known volume of standard gas. Insert the needle through the tip of the oil syringe and transfer the volume of standard gas into the oil syringe. Reweigh to determine the actual oil volume. Wrap the oil syringe with aluminium foil to avoid degradation with daylight and attach it to a laboratory 3-D shaker. Shake for 1 h or until all gasses are dissolved.

NOTE 1 Any other procedure that assists dissolution of gases in oil (for example, mixing with magnetic stirrer or other) is suitable and can be used.

d) Record the atmospheric pressure and temperature: also refer to the note in 6.2.2.2. Calculate the dissolved gas concentration from oil volume, injected calibration gas volume, temperature and atmospheric pressure, as in 6.2.3. Express the quantities of gases injected in μmoles, or in μl converted to normal conditions (20 °C; 101,3 kPa).

e) Repeat the procedure in order to obtain at least 3 gas-in-oil samples (in the case of headspace only) having concentrations that allow a calibration curve to be drawn covering the values expected in the unknown samples.

NOTE 2 If a total gas-saturated mixture is desired, draw dry CO_2-free air or nitrogen into the syringe to make, with the gases already injected, a total of 10 % to 8 % of the oil volume according to the gas chosen (see Figure 5f).

Turn the three-way valve (3) to position A and shake the syringe again until the air or nitrogen is dissolved. Cooling the syringe in a refrigerator accelerates the dissolution of the gas in the oil.

NOTE 3 A vial may be used instead of a syringe. Fill the vial with the same amount of degassed oil as that needed when the ordinary analysis is performed, with the exact volume of oil measured by weight. Introduce into this vial known quantities of a calibrated gas mixture, so that the concentrations in the oil are in the same range as in the unknown field sample.

7 Extraction of gases from oil

7.1 General remarks

Removal of dissolved gases from oil for analysis may be accomplished either by vacuum extraction, stripping or headspace.

The multi-cycle vacuum extraction (Toepler) method is described in 7.2.

The single-cycle vacuum extraction (partial degassing) method is described in 7.3.

The stripping method is described in 7.4.

The headspace method is described in 7.5.

7.2 Multi-cycle vacuum extraction using Toepler pump apparatus

7.2.1 General

In this method, an operating procedure which attempts to remove as much as possible of the dissolved gas from the oil is used. It is normally possible to remove about 97 % of the more soluble gases and even higher percentages of the less soluble gases. Such a small imperfection is rarely significant when considering overall accuracies, but, in any case, the preferred method of calibration using gas-in-oil standards takes account of incomplete extraction.

NOTE To calibrate this method with gas-in-oil standards, the procedure described in 6.2 for preparation of argon-free standards should be used, since the calculation will be affected by the amount of dissolved argon that will be extracted but not detected by the gas chromatograph.

7.2.2 Toepler pump extraction apparatus

An example of a suitable design is shown in Figure 6a. Note that Figure 6b includes recommended volumes. In this design, oil containing gas in solution is injected through a septum (9). Alternatively, after the equipment has been evacuated, oil may be withdrawn from an oil sample bottle via a tube attached to valve (V8) that has previously been filled with oil (see Figure 6c).

The Toepler pump extraction apparatus shall

a) be capable of subjecting the liquid to a vacuum less than 10 Pa,

b) be vacuum-tight. The vacuum tightness of the whole system may be verified by carrying out the extraction procedure but without introducing oil, as follows:

   carry out steps b), c) and d) of 7.2.3. Omit step e). Continue with steps f), g) and h) as if oil were present. After compression of gas to atmospheric pressure in step h), the amount of gas should be less than 0,1 ml,

c) permit the measurement of extracted gas to be made to the nearest 0,05 ml or better, at normal temperature and pressure.

In addition:

d) all tubing connecting the degassing flask (3) to the gas collection flask (2) (in Figure 6a) shall be of large bore, at least 5 mm internal diameter and as short as practicable;

e) the vacuum gauge used cannot be of a type that operates at high temperature or uses ionizing radiation (thermocouple, ionization or Penning gauges) since these can produce gases of the types being measured by cracking the oil vapours present in the system. Since it may react with extracted gases, a Pirani gauge is not suitable either. A sensor based on capacitance changes between two chambers is suitable. It is recommended that two sensors be used, one in the vacuum chamber, the second for measuring gas volumes at atmospheric pressure.

Further requirements are noted in 7.3 in which the partial degassing method is described.

Since the detailed design of this apparatus is not standardized, it is necessary to establish an operation that will ensure adequate extraction of all components of the dissolved gas. The main parameters that need to be established are the number of degassing cycles (strokes) of the Toepler pump that should be used and the time for which each degassing cycle should last. This operation is preferably established by degassing a gas-in-oil standard as follows.

Use the extraction procedure as detailed in 7.2.3 but, instead of degassing an unknown oil sample, substitute a gas-in-oil standard of the volume normally used containing all the gases listed in 8.1.

Degas successive standards until a number of cycles of the Toepler pump, together with a degassing time on each stroke, has been established so that the area or height of each peak on the chromatogram of the extracted gases is within 95 % of the area or height of that peak on the chromatogram of the same quantities of gases injected directly into the chromatograph by means of a standard gas mixture (see 8.6).

A degassing time on each cycle of 1 min to 3 min for mineral oils is frequently used; the shorter the time the more degassing cycles are likely to be required. Similar degassing times can be used for non-mineral oils of similar viscosity, and longer ones for more viscous oils (e.g., 5 min to 10 min for silicone oils).

The above procedure serves to establish a routine of operation, which will apply until any major changes are made to the equipment and will also apply to other equipment of the same design. It is recommended that the overall calibration of the complete equipment (degassing equipment plus chromatograph) is checked periodically (for example, every six months) using gas-in-oil standards to provide correction factors to be applied to areas or heights of chromatogram peaks.

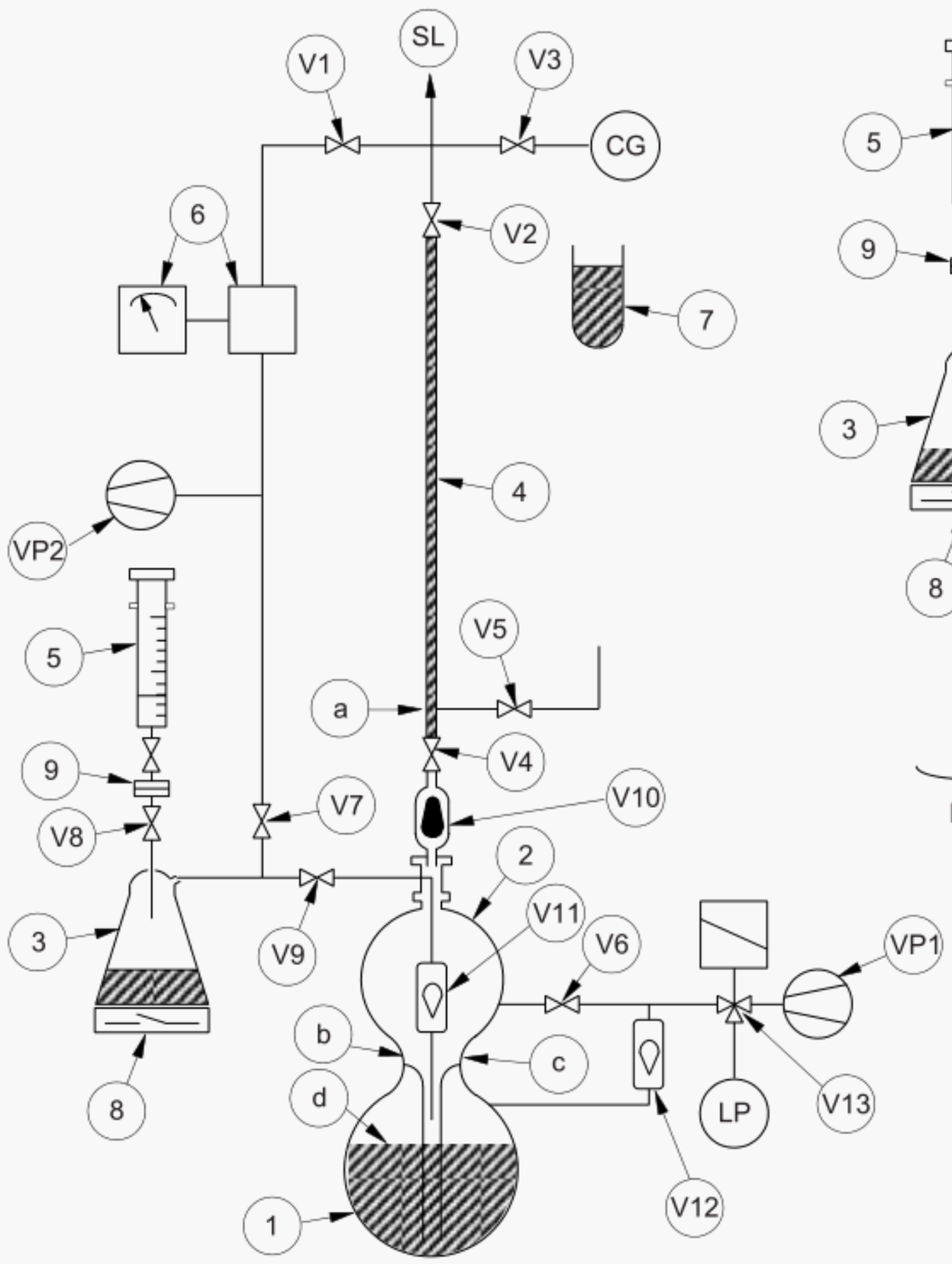

Figure 6a – General view of a Toepler pump extraction apparatus

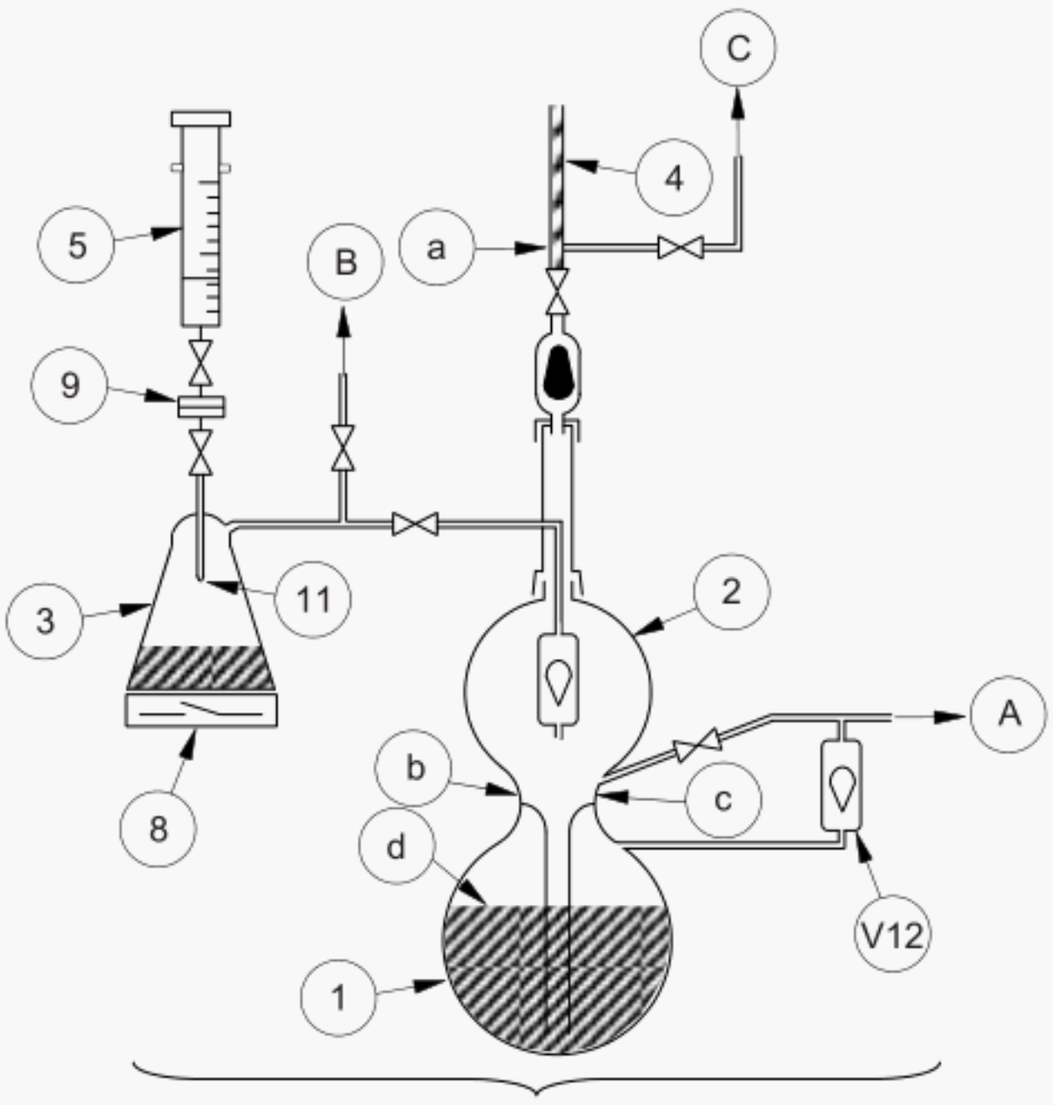

Figure 6b – Recommended volumes of several parts of a Toepler pump

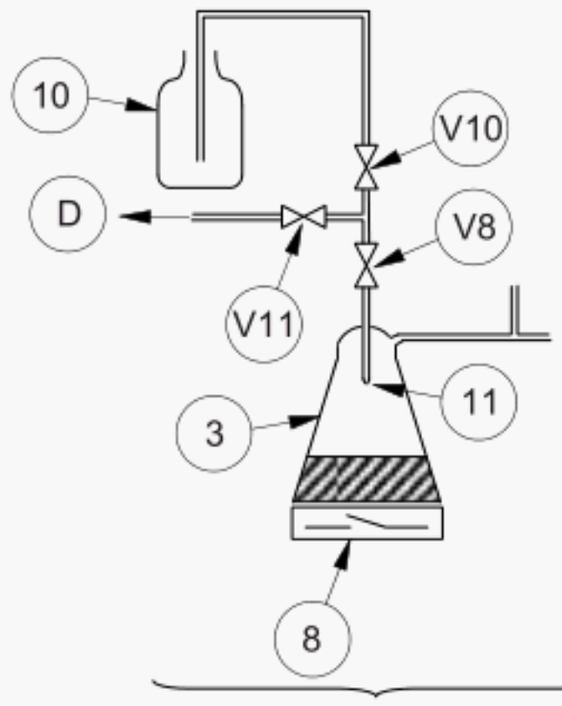

Figure 6c – Example of oil introduction by bottle

IEC 2462/11

Key

1	mercury reservoir – 2 l
2	gas collection flask – 1 l
3	degassing flask – 250 ml or 500 ml
4	gas-collecting burette – 25 ml (0,05 ml divisions)
5	introduction of oil sample via syringe
6	Pirani vacuum gauge
7	mercury-levelling vessel
8	magnetic stirrer
9	septum
10	oil-sampling bottle
11	jet

V1 – V11	hand stopcocks
V10 – V12	non-return valves
V13	electromagnetic three-way valve
VP1	rough vacuum pump
VP2	main vacuum pump
LP	connection to low pressure air (± 110 kPa)
SL	connection to GC sample loop
CG	connection to calibration gas cylinder
a b c	electrical contacts
d	mercury level mark on tube
A	connection to rough vacuum pump and air
B	Connection to main vacuum pump
C	Connection to mercury-levelling vessel
D	connection to waste oil reservoir and rough vacuum pump

NOTE Item 6 of Figure 6a should read “capacitance measurement device”.

Figure 6 – Example of a Toepler pump extraction apparatus

7.2.3 Extraction procedure

The following is a typical extraction procedure used when a sample is in a syringe. It is described by reference to the apparatus shown in Figures 6a and 6b. Modifications in the procedure may be needed for apparatus of other designs.

a) Weigh the syringe (5) containing the oil sample and connect it to the degassing flask (3). When a bottle is used as a container (Figure 9c), the mass of oil degassed is determined by weighing the degassing flask before and after introducing the oil.

b) Open valves V1, V2, V4, V6, V7 and V9. Close valves V3, V5 and V8. The valve V13 is a solenoid-operated three-way valve, which at this stage is not energized and connects the vacuum pump VP1 to the system.

c) Switch on the vacuum pumps VP1 and VP2 and the magnetic stirrer (8).

d) When the pressure has fallen to 10 Pa, close valves V2, V6 and V7.

e) Open valve V8 and inject a sufficient oil sample through the septum (9) into the degassing flask (3). This is the start of the degassing part of the Toepler pump cycle.

NOTE 1 A gas bubble in the syringe suggests that the plunger has stuck and indicates the desirability of a new sample. If this cannot be provided, ensure that the bubble is introduced together with all of the oil or is re-dissolved in the oil by shaking the syringe.

NOTE 2 The minimum oil volume to be used is the volume necessary to produce enough gas volume for injection in the gas chromatograph. When this is possible, larger oil volumes may be used to increase the precision of the analysis. For oil from a factory test, a modification may be needed; see note 3 of step j) below.

f) After the established degassing time (for example, 1 min to 3 min) continue the first Toepler pump cycle by switching valve V13 so as to admit low-pressure compressed air above the mercury which rises to the level of contact (a), compressing gas from the collection flask into the burette. Reversal of valve V13 to connect the vacuum pump to the mercury reservoir (1) allows the mercury to return (the gas collected in the burette being trapped by the non-return float valve V10) and further gas to be extracted from the oil. The contacts allow this cycle to be automated. Inductive level switches may be used instead.

   An electric counter is helpful in counting the number of cycles and for stopping the procedure after the required number of cycles, as established as standard for the apparatus. Alternatively, the equipment may be run automatically for a standard time (for example, 10 min for a cycle time of 1 min).

   The number of strokes should be such that the vacuum at the end of extraction approaches the initial value before extraction. The number of strokes necessary depends on the ratio between the total volume of the equipment and the volume of the pump. Typically, 4 to 20 strokes have been found suitable to reach 97 % extraction for the more soluble gases, depending on the equipment used.

g) Switch off the automatic cycling control (if used) and set valve V13 to admit air. Allow mercury to rise into the burette to above the level of valve (V5). Close valve (V4).

h) Open valve (V6) and adjust the mercury levelling vessel (7) to bring the mercury surfaces to the same level. Read the total volume of gas collected in the burette. Note the ambient temperature and pressure.

i) Remove and reweigh the oil syringe to obtain the mass of oil that has been degassed. Determine the density of the oil at ambient temperature.

j) Close valve (V1), open valve (V2) to admit the extracted gas into the sample loop. Again adjust the mercury levelling vessel to bring both the mercury surfaces to the new level and close valve.

NOTE 3 Another arrangement frequently used is to fit a septum on the top of the burette in place of valve (V2) and to transfer an aliquot of gas to the chromatograph by means of a precision gas-tight syringe. In such a case, it is good practice to fit a new septum each time the equipment is used.

NOTE 4 If an inadequate quantity of gas has resulted from degassing the first oil sample, the degassing flask may be disconnected and emptied, and the method repeated with a new oil sample. The first quantity of extracted gas is retained in the burette by keeping valve (V4) closed until the remainder of the system is re-evacuated (step d) above).

Alternatively, where concentrations of gas are expected to be low, a larger degassing flask, up to 2 l, may be fitted, with sample volumes up to 500 ml. Introduce the oil sample slowly to facilitate gas extraction.

k) Calculate the total gas content extracted C_T of the oil sample in µl/l at 20 °C and 101,3 kPa from the expression:

$$C_T = (P/101{,}3) \times (293/273 + t) \times (Vd/m) \times 10^6$$

where

P is the ambient air pressure, in kPa;

t is the ambient air temperature, in °C;

V is the total volume of gas extracted, at ambient temperature and pressure, in ml;

d is the density of oil corrected to 20 °C, in g/ml;

m is the mass of oil degassed, in g.

l) Carry out the analysis as in Clause 8.

NOTE 5 Because the gas is not totally extracted from the oil, a rinse step may be required after a high concentration has been run (for example, after analysis of oil sample from tap changer). The extractor can be rinsed with oil containing non-detectable quantities of gases, except for those present in the air.

7.3 Vacuum extraction by partial degassing method

7.3.1 General remark

In this method, gas extraction is accomplished by only one exposure to vacuum (between 3 min for mineral oils and 10 min for the more viscous silicone oils). Extraction efficiency depends on component gas solubility. Correction of this incomplete gas extraction can be obtained by calculation from the Ostwald solubility coefficients of the gases in transformer oil, either mineral or non-mineral (see Annex A)

7.3.2 Partial degassing apparatus

Equipment such as that shown in Figures 6a and 6b is equally suitable for this method with the following changes:

a) The automatic control arrangements used in the Toepler pump mode (valves V10 and electric contacts a, b and c) are not required. A simple hand pump (blow-ball) can be fitted in place of the low-pressure compressed air supply.

b) The total expansion volume (degassing flask (3) plus collection flask (2) and connecting tubing, less the oil volume) should be at least 20 times the oil volume. In the apparatus shown in Figure 6b, a collection flask of 500 ml and a degassing flask of 150 ml are suitable for an oil volume of 25 ml to 30 ml.

c) The mercury reservoir volume should not greatly exceed that of the collection flask; in the apparatus shown in Figure 6b, a reservoir volume of approximately 600 ml to 700 ml is recommended. The reservoir should be filled with mercury to leave an air space of not more than 100 ml to 150 ml.

d) A mark should be made on the dip tube in the mercury reservoir, (mark d in Figures 6a and 6b) so that when the equipment is used for partial degassing the mercury can be brought to this mark and the expansion volume thus accurately defined.

e) The apparatus shall be leak-free and capable of evacuation to 0,1 Pa. The burette, typically 3,5 ml, shall be calibrated in 0,01 ml divisions, and the connecting tubing and vacuum gauge as in points d) and f) of 7.2.2.

f) Alternatively to the syringe, the needle and the septum, a flexible PTFE tubing connected to the valve can be used to introduce oil samples.

7.3.3 Extraction procedure

a) Weigh the syringe (5) containing the oil sample and connect it to the degassing flask (3).

b) Proceed as in steps b) to e) of 7.2.3, evacuating down to 0,1 Pa.

c) Allow degassing to continue for 5 min to 10 min, depending on the oil viscosity, with the stirrer operating vigorously. Then close valve (V9).

d) Proceed as in steps g) and h) of 7.2.3.

e) Calculate the total gas volume extracted by dividing the volume of gas collected in the burette by the volumetric collection ratio V_c / V_t, where

   – V_c (collection volume) is the volume of the burette and collection flask (2), from mark "d" to valves V9, V6, V5 and V2;

   – V_t (total expansion volume) is V_c plus the volume of the degassing flask (3) and connecting tubing to V9, V8 and V7, less the volume of oil.

f) Remove and reweigh the syringe to obtain the mass of oil that has been degassed. Determine the density of the oil at ambient temperature.

g) Correct the calculated total volume of gas extracted to 20 °C and 101,3 kPa as in step k) of 7.2.3.

h) Inject an aliquot of the gas extracted into the chromatograph as in step j) of 7.2.3.

i) Carry out the analysis as in Clause 8.

j) Calculate the actual concentration of each gas component originally present in the oil sample, by dividing its chromatographically measured concentration by its extraction efficiency E_i (see Annex A).

NOTE Because the gas is not totally extracted from the oil, a rinse step may be required after a high concentration has been run (for example, after analysis of oil sample from tap changer). The extractor can be rinsed with oil containing non-detectable quantities of gases, except for those present in the air.

7.4 Stripping extraction method

7.4.1 General

The extraction of dissolved gases is carried out by the carrier gas itself bubbling through a small volume of the oil. Typically an oil volume between 0,25 ml and 5 ml is used.

The time required to extract larger volumes would give unacceptable gas chromatograms except when used with cold traps or for hydrogen analysis only.

7.4.2 Stripping apparatus

Various designs of strippers are used. Figure 7 shows borosilicate glass strippers. Oil is injected into the stripper from a syringe via a rubber septum. This septum can be used several times (3 to 10 depending on the size of the needles) before leakage occurs.

A design of a stripper made of stainless steel is shown in Figure 8. A needle with a cock and interchangeable syringe connection is permanently fixed into the base of the stripper and a syringe containing oil is attached to the fixed needle. The oil is injected by the movement of a pneumatic actuator on the syringe plunger.

The volume of oil injected shall be measured with an accuracy better than 1,0 %. Injection from a precision syringe has been found to achieve this requirement but difference of syringe mass before and after injection is to be preferred if better accuracy is required.

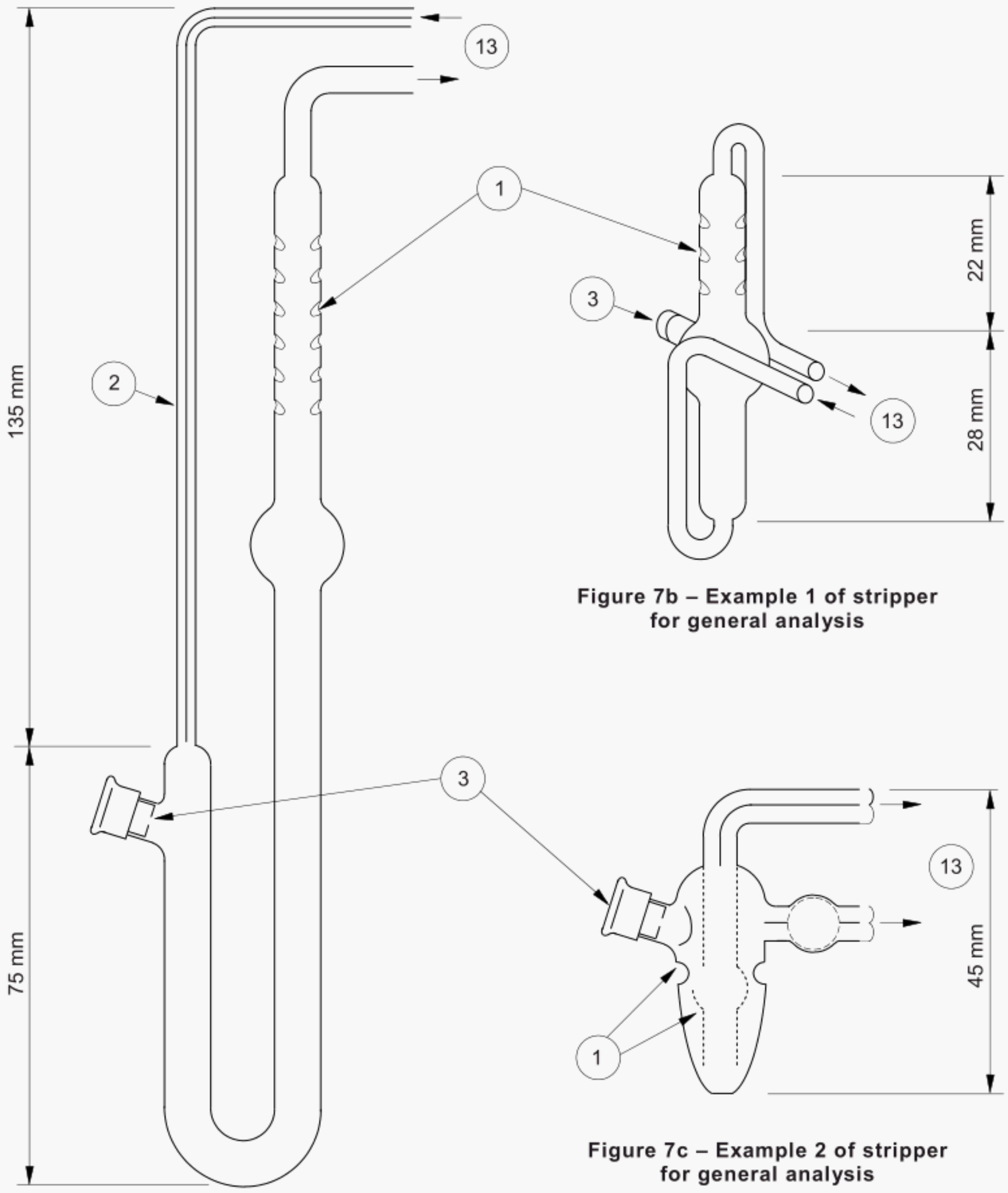

Figure 7b – Example 1 of stripper for general analysis

Figure 7c – Example 2 of stripper for general analysis

Figure 7a – Stripper for hydrogen analysis

IEC 2463/11

Key

1 glass indentations
2 capillary tube
3 oil injection septum
13 connection to six port gas-sampling valve (see Figure 12a)

Figure 7 – Types of glass strippers

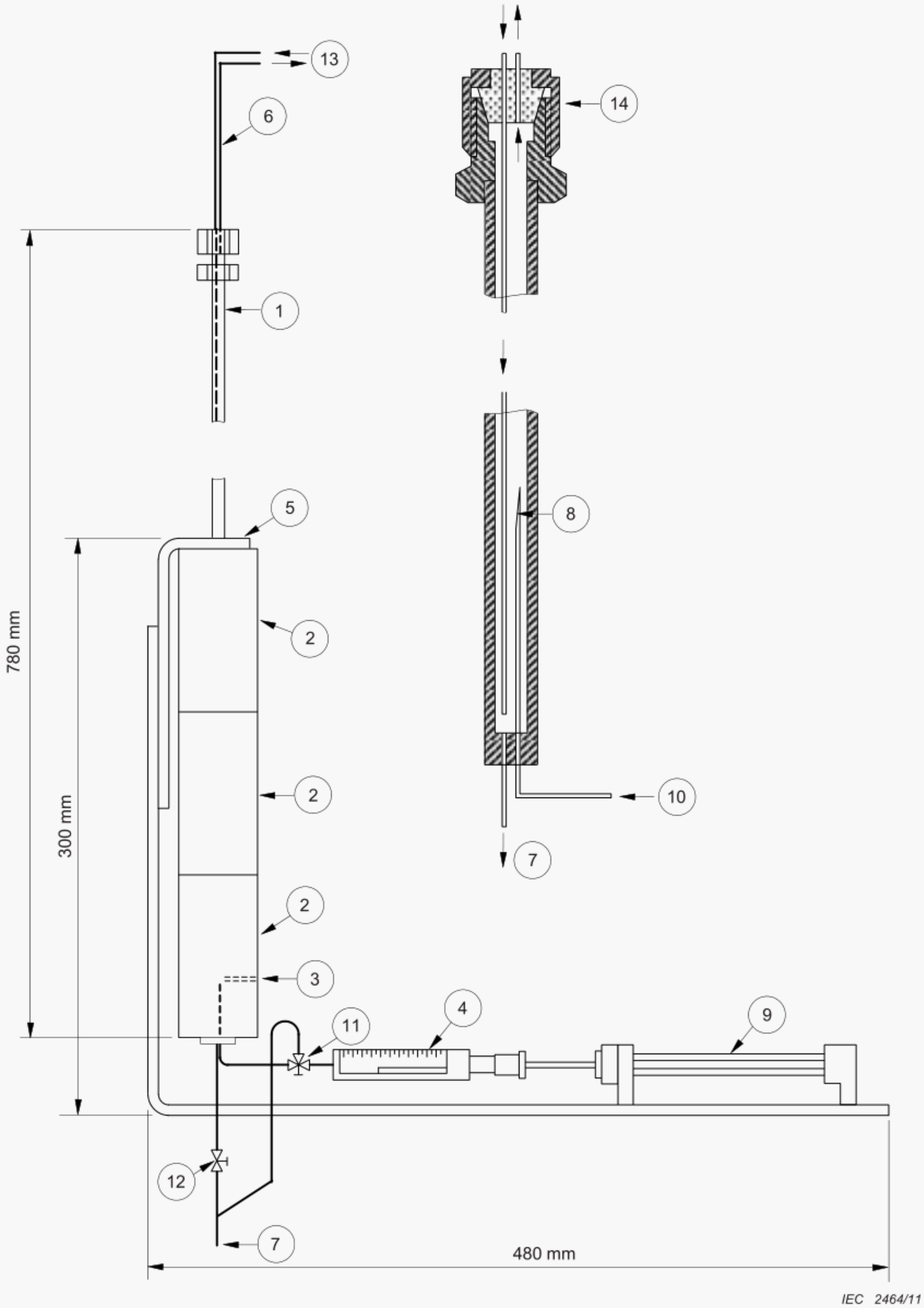

Key

1 stainless steel tube (OD 6 mm – ID 4 mm)
2 heating blocks
3 temperature sensor
4 5 ml syringe
5 aluminium bracket
6 stainless steel capillary tubing inlet and outlet (OD 1,6 mm)
7 waste oil
8 end of oil injection needle
9 air cylinder
10 oil injection
11 three-way valve
12 stopcock
13 connection to six port gas-sampling valve (see Figure 12a)
14 biconical union

Figure 8 – Stainless steel stripper

7.4.3 Outline of procedure

a) As shown in Figure 9a connect the stripper in place of the sample loop of the gas chromatograph gas-sampling valve preferably using compression fittings. Vacuum rubber tubing may alternatively be used for the connections then verify that there is no leakage due to overpressure of the carrier gas; if such is the case, reduce the overpressure.

b) Maintain the stripper at a controlled temperature between 20 °C and 80 °C. Indeed, elevated temperatures reduce oil viscosity and facilitate gas stripping.

c) Allow the carrier gas to flow through the stripper.

d) Before injection of the oil, check that the operating conditions of the equipment are satisfactory and particularly that the baseline on the recorder is stable.

e) Inject the oil to be analysed into the stripper. The volume of oil to be injected will depend upon the type of stripper used and the expected gas content. During this operation, the carrier gas flow through the stripper shall be maintained.

f) After the analysis has been completed, some stripper designs permit a back flush of the injected oil to waste without disconnecting the stripper. If the stripper is to be disconnected for cleaning, the gas outlet tube should be disconnected first to avoid the possibility of the oil sample entering the gas-sampling valve. Carry out the analysis as in Clause 8.

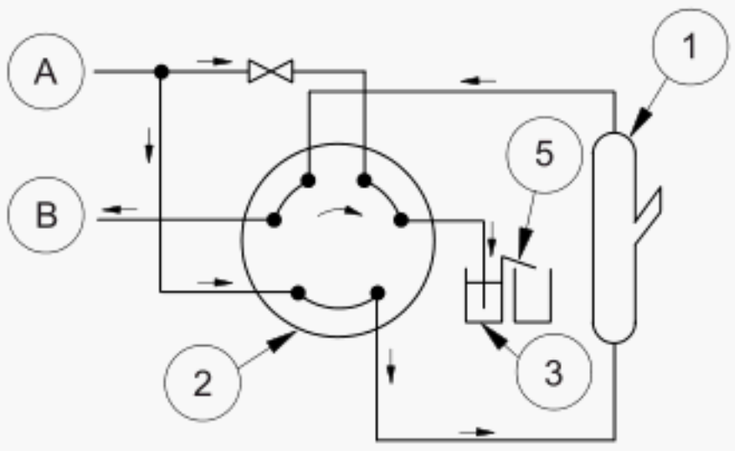

Position A: analysis

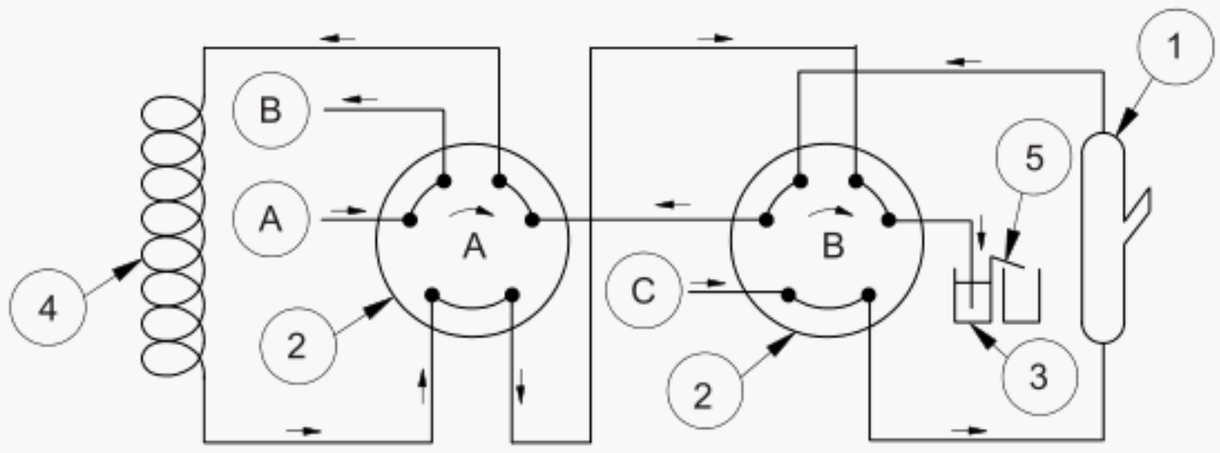

Position A1: trapping of gases

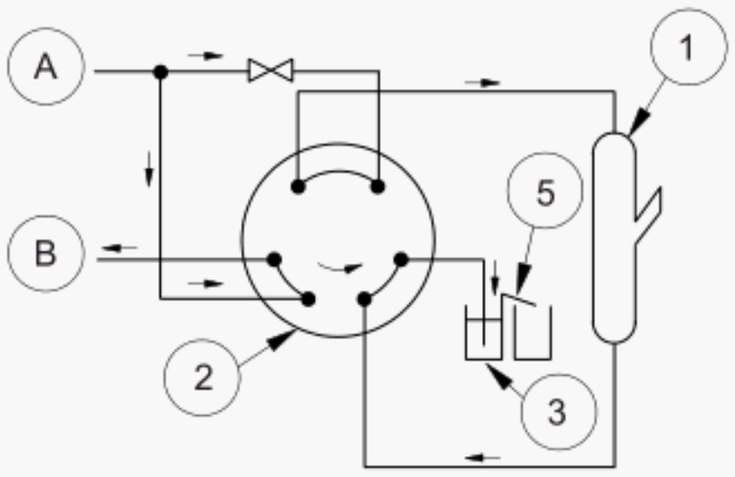

Position B: purge (emptying of stripper)

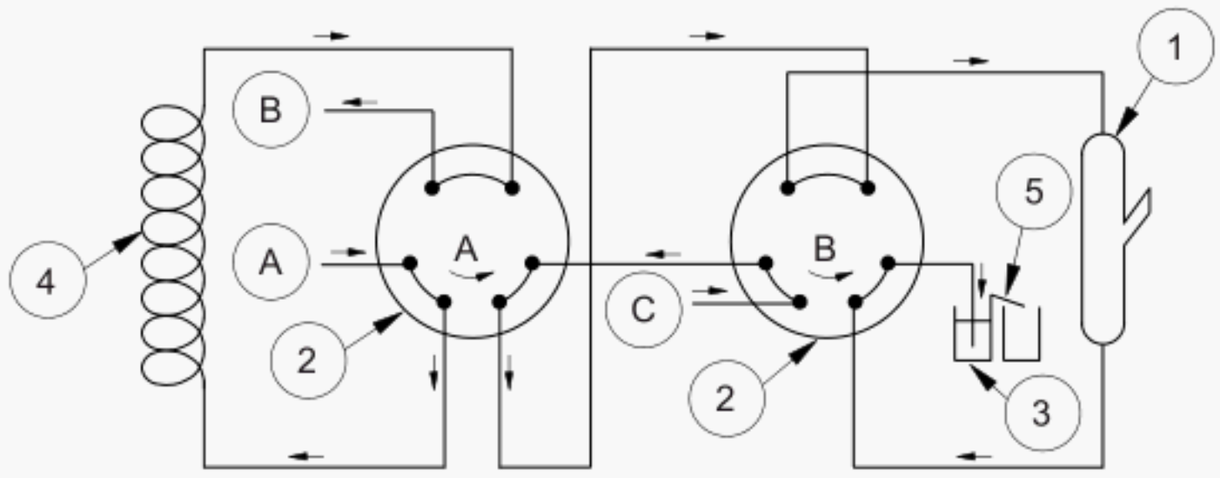

Position B1: injection + purge (emptying of stripper)

Figure 9a – Usual arrangement for degassing up to about 2,5 ml of oil

Figure 9b – Arrangement with cold trap added for use with larger quantities of oil

IEC 2465/11

Key

A inlet carrier gas
B outlet carrier gas (to chromatograph)
C carrier gas for extraction

1 stripper
2 six port gas-sampling valve
3 mercury valve
4 cold trap
5 waste vessel

Figure 9 – Schematic arrangement for connecting an oil stripper to a gas chromatograph

7.5 Headspace method

7.5.1 Principle of the method

In this method a volume of oil V_L is introduced in a glass vial in contact with a gas phase ("headspace") of volume V_G. A portion of the gases dissolved in the oil (H_2, O_2, N_2, CH_4, C_2H_2, C_2H_4, C_2H_6, CO and CO_2) transfers to the headspace, under equilibrium conditions of temperature, pressure and agitation. The headspace is transferred to an injection loop or directly in the column of the gas chromatograph depending on the apparatus used. Calibration curves are used to establish the concentration of each gas in the headspace. The concentrations of the gases in oil are then calculated by using Henry's law and experimentally determining the partition coefficients of the oil or by direct calibration with gas-in-oil standards. A schematic representation of this method is shown in Figure 10.

Warning: This method will provide reproducible results only if all the operation and calibration parameters are precisely controlled, otherwise significant errors may occur. The following parameters are of particular importance: total volume of vials, volume of oil, tightness of septa, temperature, dilution with argon and actual pressure in the vials after each step of the procedure. The same exact parameters should always be used for field samples, gas standards and oil standards.

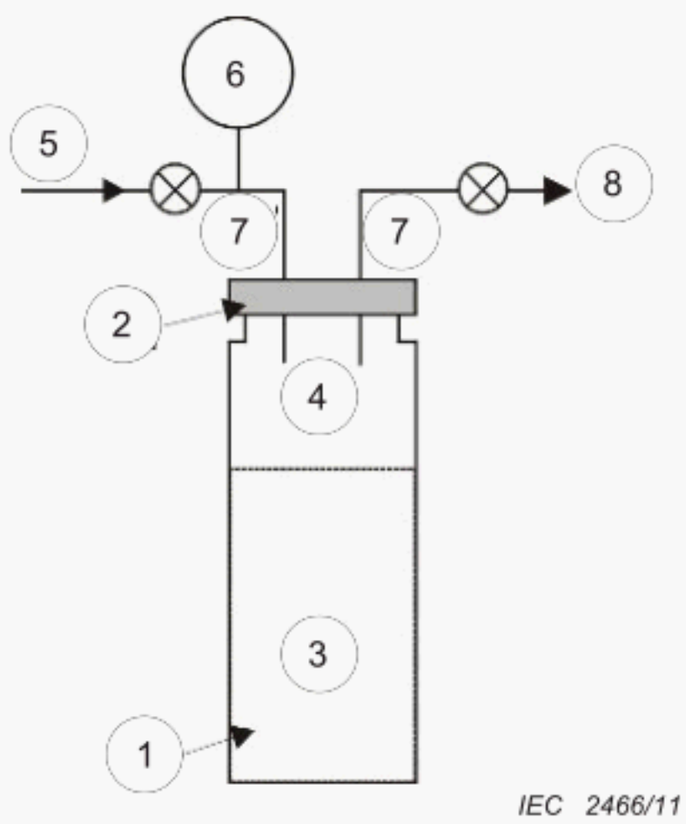

Key

1	vial	5	carrier gas
2	septum	6	pressurization gauge
3	oil sample	7	headspace sampler needles
4	gas phase	8	to GC injection loop and detectors

Figure 10 – Schematic representation of headspace sampler

7.5.2 Symbols and abbreviations

V total volume of the vial;

V_G volume of the gas phase in the vial;

V_L volume of the oil phase in the vial;

C_G concentration of gas (i) in the gas phase of vial, obtained by GC (gas chromatography);

C_L^{0*} concentration of gas (i) in the oil sample, obtained directly from C_G using calibration curves with gas-in-oil standards;

P, t atmospheric pressure and temperature when the oil sample was analysed (P in kPa; t in °C);

P_s, t_s atmospheric pressure and temperature when the gas-in-oil standard, or the gas standard, was analysed (P_s in kPa; t_s in °C);

K partition coefficient of gas (i), for the calculation of C_L^0 using gas standards;

C_L^0 concentration of gas (i) in the oil sample.

7.5.3 Headspace extraction apparatus

7.5.3.1 General remark

An example of a suitable design includes the following components.

7.5.3.2 Headspace sampler

This sampler is equipped with a transfer line connected directly or through a T union to the first column of the gas chromatograph. Samplers equipped with syringe injection have not been evaluated.

NOTE The size of injection loops should be adapted to the type of columns in order to avoid broadening of peaks. If injection loops larger than 1 ml are used, it should be verified that the overpressure is high enough to adequately flush the sample loop and fill it to atmospheric pressure prior to the injection step (this will depend on the volume of the circuit between the vial and the vent in some systems).

A second injection loop may be necessary for injecting gas mixtures directly into the chromatograph, to check the response of the GC detectors daily with calibrated gas, and to perform Buchholz analysis. These operations are also possible using the headspace sampler, after transferring the calibrated gas mixture or the Buchholz gas sample into pre-purged vials.

7.5.3.3 Headspace glass vials

7.5.3.3.1 General

Use headspace vials suitable for use with the equipment. The actual volume of commercial vials may differ from the nominal value.

NOTE 20 ml vials have shown good performance. Their actual volume is closer to 22,3 ml.

The total volume of the vial V has a great influence on the value of the V_G/V_L ratio, and on the final results. Since significant variations of volume can occur between different batches of vials and between different vials of the same batch, the average value for each batch of vials purchased by the laboratory should be determined when they have different batch numbers. This can be done by measurement of the mass of pure water that can be contained in a vial according to the procedure described below in 7.5.3.3.2.

Condition 10 to 20 vials from the same batch and 100 ml of distilled water for 1 h at room temperature and note the temperature.

7.5.3.3.2 Headspace glass vials calibration procedure

Determine the weight of the empty vials to the nearest 0,01 g. Fill the vials completely with distilled water as shown in Figure 11 and reweigh to the nearest 0,01 g. Calculate the volume of each vial by using the following equation:

$$V = (W - W_0)/D$$

where

V is the total volume of the vial, in ml;

W_o is the weight of the empty vial, in g;

W is the weight of the vial filled with water, in g;

D is the density of water at measurement temperature, in g/ml.

Calculate the mean volume and the relative standard deviation, s % for the vials tested. If the value of s % is higher than 1 %, the controlled batch of vials is rejected and a new batch of vials shall be tested.

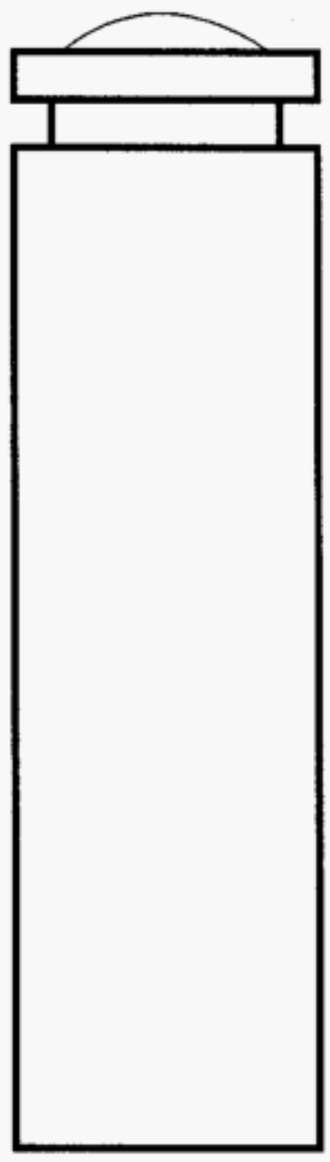

IEC 2467/11

Figure 11 – Vial filled with water

7.5.3.4 Septa

The brands of septa used should not introduce contamination of the vials during analysis and should not leak after having been punctured by needles, especially by the large diameter needles in 7.5.4.1.2.

The suitability of septa is checked by analysis on blank vials containing argon only at atmospheric pressure, having been punctured the same number of times as the vials containing the oil samples or gas standards and left 24 h at room temperature. Very low quantities of oxygen and nitrogen should be found (not more than 150 µl/l O_2 and 350 µl/l N_2).

Another means of checking septa is by immersing the closed vial with its pierced septum in a water bath heated at 90 °C and check for bubbles This test is useful also for checking the crimping method.

Porosity of septa can also be tested by filling a number of crimped vials (at least 10) with a gas mixture containing approximately 100 µl/l hydrogen using one of the methods within 7.5.4.1. Using the method in 7.5.5.3, analyse duplicate vials for hydrogen content at intervals over a period of about 1 week, the first analyses being made as soon as possible after filling the vials. Normal calibration procedures should be carried out. The septum and seal are acceptable if the rate of decrease in hydrogen concentration is less than 2,5 % per day.

NOTE 1 Only PTFE-lined septa should be used, preferably of the chlorobutyl rubber, high-temperature type (PTFE = polytetrafluoroethylene = Teflon ®). Silicone rubber septa have been found to leak and should be avoided.

In any case, new types of septa should be checked before use. The quality of the crimping equipment (crimping head and perforated aluminium caps) and the skill of the operator have been reported as critical.

NOTE 2 When the reliability of septa cannot be assessed with certainty, it is recommended that subprocedure 7.5.4.1.1 (preparation of vials in an inert box) be used.

7.5.3.5 Oil syringes

Appropriate oil volumes, measured as precisely as possible, are introduced in the vials, so that the V_G/V_L ratio is the same for all field samples and gas-in-oil standards analysed. Volumes of 10 ml to 15 ml have been found suitable, but lower or larger oil volumes may be used, depending on the gas content of the oil sample. Glass syringes of 20 ml, 30 ml or 50 ml can be used. New batches of syringes should be calibrated with the following procedure.

Fill a syringe with 20 ml of oil of known density. Weigh the filled syringe to the nearest 0,01 g. Draw 15 ml of oil from the syringe then reweigh the syringe. Subtract the two weights to obtain the weight of oil drawn. Calculate the volume of oil by dividing the weight of oil by the density of the oil. Perform this test on 20 syringes of each new batch. Calculate the standard deviation(s) and s % for the 20 syringes. If s % is higher than 1,3 %, the controlled batch of syringes is rejected and a new batch of syringes shall be tested.

Glass syringes are not intended for precise volumetric work. The index mark on the piston is about 0,5 ml in width, allowing considerable variations with operators. Therefore, the exact amount of oil introduced in a vial should be measured by weighing the vial or the syringe before and after introduction of the oil (see 7.5.4.1).

Two different types of needles are needed (A and B). For type A, 0,84 mm ID (gauge 18) (for the transfer of oil) and for type B, 0,25 mm ID (gauge 26) (for the transfer of gases and pressure equilibration) have been found suitable. Needle size should be adapted to the type of septa to ensure that they will not induce leaks (see 7.5.3.4).

For the procedure of 7.5.4.1.2, a maximum size of 0,84 mm ID and 1,27 mm OD (gauge 18) is recommended to avoid leaks through the septa.

For the procedure of 7.5.4.1.1, larger size needles may be used as they will not be used to pierce septa, and a larger size needle will facilitate oil introduction.

7.5.3.6 Inert boxes

7.5.3.6.1 General

An inert box (either a glove box, a glove bag or a “revolving table”) is required for the procedure of 7.5.4.1.1.

7.5.3.6.2 Glove box

The glove box and its lock chamber should be purged with at least 5 times its volume of argon (typically, at 400 ml/min). Alternatively, a plastic glove bag, filled with all the necessary equipment (syringes, vials, etc), then purged with argon, may be used.

7.5.3.6.3 Revolving table

The “revolving table” is described in Figure 12: a carousel carrying 20 empty vials is placed in a circular housing, hermetically covered by a transparent removable lid. The carrousel can be rotated from outside with a knob.

A septum is attached to one side of the lid, and a vial crimper on the other side, both facing the mouth of the vials.

The revolving table is continuously flushed with inert gas (the same used as carrier gas) at a known and constant flow rate and pressure, to ensure constant operation conditions.

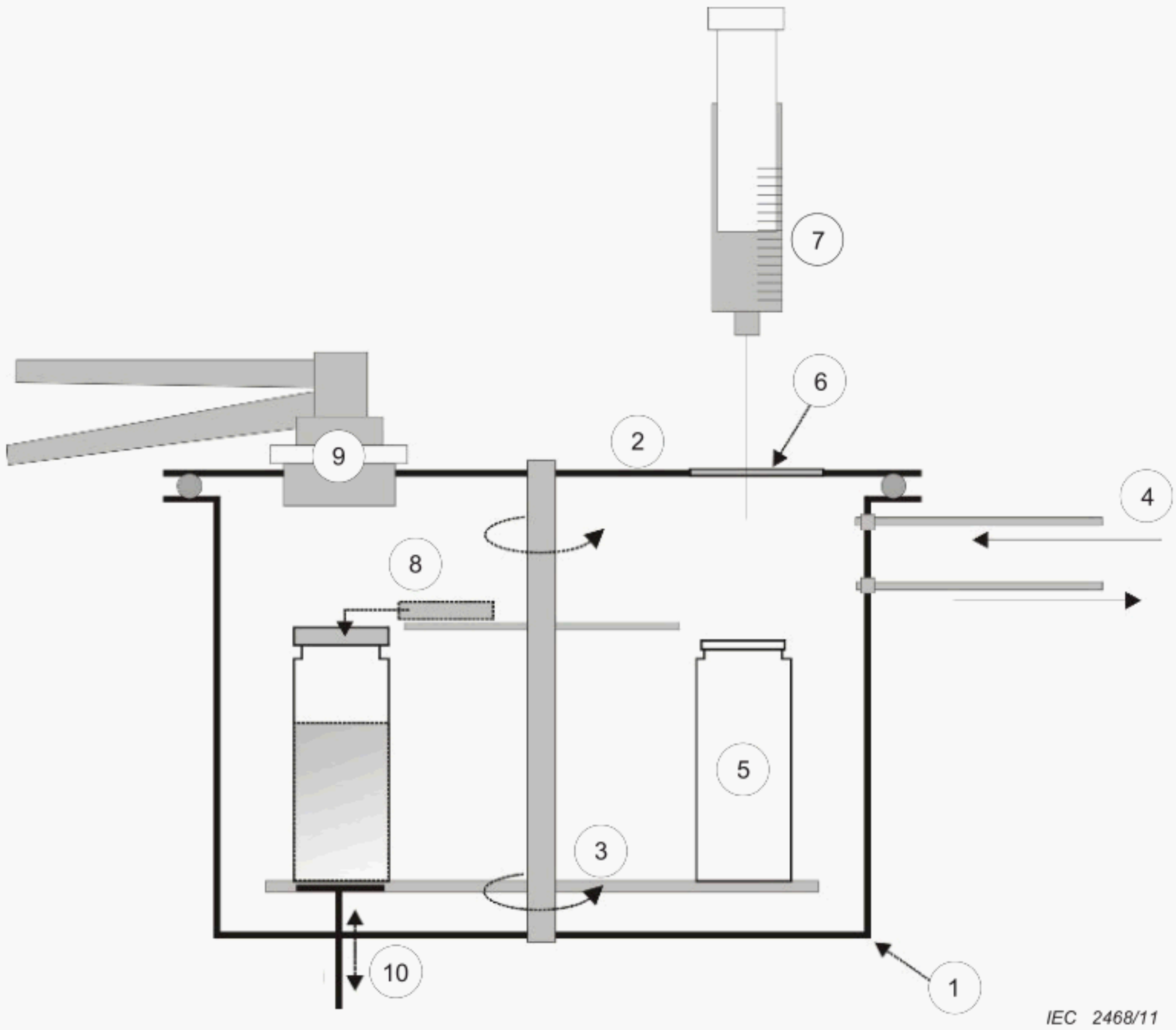

Key

1	housing	6	lid septum
2	lid	7	oil syringe
3	rotating carousel	8	vial septum and cap
4	argon purge	9	vial crimper
5	vial	10	vial lifter

Figure 12 – Revolving table

7.5.3.7 Headspace operational conditions

See Table 2. The same conditions can be used for mineral and non-mineral oils.

Table 2 – Examples of headspace operating conditions

Carrier gas		Argon
Temperatures, in °C	Vial	70
	Transfer line	70-150
	Injector	150
Pressure, in kPa	Overpressure in vial	35-40
Volume, in ml	Sampling loop	0,25-1
Times, in minutes	Equilibration	10-180
	Pressurization	0,05-0,25
	Pressure equilibrium	0,05-0,25
	Expansion in sample loop	0,20-0,25
	Injection	0,20-1,00
Mixing power		High
NOTE 1 Ultrasonic agitation should not be used to speed up equilibrium times as it may produce hydrogen. NOTE 2 "High" (or "maximum") mixing power refers to the position on the headspace equipment (about 100 shaking movements per minute). NOTE 3 The pressurization time to be used is the shortest one to get equilibrium.		

Monitoring/recording of measurable parameters (argon overpressure, temperature, etc.) within a precision of ± 0,5 % is advisable to verify if they have not changed accidentally during an extended run.

This can be done by recording or printing the electronic reading of pressure available within the headspace equipment during the analysis. This may need important modifications for some headspace samplers that have only mechanical reading of the pressure.

Atmospheric pressure and ambient temperature shall be recorded when filling the vials, within a precision of ± 0,5 %, to be able to calculate actual quantities of gases introduced at the various steps of the procedure, and/or to convert to the conditions of this standard.

7.5.3.8 Gases

Argon used shall be chromatography graded (typically, > 99,999 % pure).

Standard gas mixtures supplied with a calibration certificate of ± 1 %, if available, or at worst ± 2 %, are used to establish a calibration curve for each dissolved gas. The concentrations of the mixtures should be chosen in order to fully cover the expected concentration range of field samples, which depends on the type of equipment to be monitored.

Different levels of concentrations in the calibration curve may be obtained by injecting different volumes of the same standard mixture or by using different standard mixtures in a suitable concentration range.

7.5.4 Headspace extraction procedure

7.5.4.1 Preparation of vials

Two alternate methods are possible, using either an inert box or needles.

7.5.4.1.1 Preparation of vials in an inert box

This method has the advantage that septa are never punctured before being placed in the headspace carrousel. The risk of septa leak (with its dramatic effect on analysis results) is therefore much reduced.

7.5.4.1.1.1 Pre-purging of vials

Pre-purging can be carried out

a) in the glove box: for practical reasons, series of 10 samples are prepared. Label and weigh 10 vials with their corresponding perforated aluminium caps and septa (uncrimped) to the nearest 0,01 g. Place the 10 weighed vials, 10 glass syringes of 20 ml, and 10 oil samples in their glass syringes or glass ampoules in the lock chamber of the glove box. Purge the lock chamber with argon. Transfer the content of the lock chamber into the glove box filled with argon.

b) in the revolving table: up to 20 empty vials weighted as above and their corresponding caps and septa (of known average weight) are placed in the closed housing. Purge with argon for 10 min to 15 min.

7.5.4.1.1.2 Preparation of vials with oil samples

Vials with oil samples can be prepared as follows:

a) in the glove box: with a 3-way valve transfer about 5 ml of the first oil sample into a glass syringe and rinse the entire body of the syringe with the oil. Release the 5 ml oil to waste and fill the glass syringe with 20 ml of oil. Disconnect the oil syringe or glass ampoule and fix a needle to the glass syringe.

   Release about 5 ml of oil into the waste vessel, then fill an empty vial with the remaining 15 ml of oil with the tip of the needle to the bottom of the vial. Adjust the volumes if a lower final oil volume (between 10 ml and 15 ml) has been chosen.

   Close the vial with its septum and crimping cap and crimp with the help of the crimping bead, making sure that the lined side is turned towards the inside of the vial.

   NOTE 1 Closing the vial should be done within 45 s after the vial has been filled with oil; otherwise, the sample should be discarded and a new one prepared.

   Repeat the same procedure for the other nine samples.

b) in the revolving table: connect a needle to the syringe containing the oil sample. Release about 5 ml of the oil sample into the waste vessel, to condition the needle and remove traces of air bubbles. Introduce an aliquot (10 ml to 15 ml) of the oil sample in a vial through the septum of the lid. Rotate the carousel and move the caps on the top of the vials. Rotate the carousel again and crimp the vial using the crimper and vial lifter. Repeat the same procedure for the 20 vials, then stop the flushing, open the lid and remove the vials from the carousel.

c) Take the crimped vials out of the glove box or revolving table and weigh them to the nearest 0,01 g. Calculate the mass of oil by subtracting the weight of the empty vials from the weight of the filled vials and calculate their volumes by dividing the mass by the density of the oil.

   NOTE 2 The actual density of oil (measured according to ISO 3675 or other standardized method) should be used for the calibration procedure with gas-in-oil standards. For sample analysis, an average density of the oil type (for example, one for paraffinic oils and one for naphthenic oils) should be used.

Measure the pressure and the ambient temperature in the glove box or revolving table precisely. Place the oil-filled vials in the headspace carousel for analysis.

The same procedures apply to gas-in-oil standards.

7.5.4.1.1.3 Preparation of vials with gas standards

This is effected outside the glove box or revolving table. Place a piece of paraffin film (Parafilm ®)[1] on the mouth of a vial. Insert two needles through the film. Purge with calibrating gas mixture so that the purging volume of the vial is at least 5 times the volume of the vial (typically, 1 min at 100 ml/min). Remove the needle and close the vial with a septum and crimp cap, without removing the film.

7.5.4.1.2 Preparation of vials with needles

Crimp a series of vials using perforated aluminium caps fitted with a PTFE-lined septum. Ensure that the lined side is turned towards the inside of the vial and that the latter is properly sealed by trying to turn the cap. If the cap is not tightly fixed, repeat the process.

7.5.4.1.2.1 Pre-purging of vials

Insert two needles A (7.5.3.5) through the vial septum, one to be used as inlet gas and the other as outlet gas, on the sides of the septum, not in its centre. Purge each vial with argon at least 5 times the vial volume (for example, at a rate of 1 l/min for 0,1 min at 120 kPa or 120 ml/min for 1 min).

First remove the outlet needle and then the inlet needle, to build up some argon overpressure in the vial. Removal of the outlet and inlet needle should be done with a minimum of delay in order to avoid excessive overpressure if high flushing rates are used.

The efficiency of this preparation technique can be checked by analysis of one of these vials containing only argon. This has also been used to test the quality of septa (see 7.5.3.4). Very low quantities of oxygen and nitrogen should be found (see NOTE 2 of 7.5.3.4).

7.5.4.1.2.2 Preparation of vials with gas standards

Insert two needles A (7.5.3.5) through the vial septum, one to be used as inlet gas and the other as outlet gas. Purge one vial with each calibration gas mixture at the same rate used in 7.5.4.1.2.1.

First remove the outlet needle (overpressure will take place in the vial). Remove the inlet needle. Using a 10 ml syringe with a type B needle remove the overpressure in the vial by inserting the needle of the syringe through the septum. After equilibrium, the atmospheric pressure will be obtained. If not, the dilution factor, and the results, will be affected when argon overpressure is applied at the next stage.

Measure ambient temperature and atmospheric pressure precisely in order to determine the exact quantities of gases present in the vial, and/or to convert to normal conditions (20 °C; 101,3 kPa).

7.5.4.1.2.3 Preparation of vials with oil samples

Weigh a pre-purged crimped vial. Attach a type A needle to the syringe stopcock. Insert the needle through the septum and insert simultaneously a second type B needle to release the argon overpressure.

Fill up the vial with the chosen amount of oil. Remove the two needles together, to make sure that the pressure in the vial at this stage is atmospheric pressure.

---

[1] Parafilm ® is the trade name of products supplied by Pechiney Plastic Packaging Company. This information is given for the convenience of users of this standard and does not constitute an endorsement by the IEC of the products named. Equivalent products may be used if they can be shown to lead to the same results.

Weigh the oil-filled vial and subtract the weigh of the empty vial to get the mass of oil in the vial. Divide by the density of the oil to get the exact volume of oil in the vial.

The same procedure applies for vials of gas-in-oil standards.

7.5.4.2 Headspace analyses

Place the vials inside the headspace sampler and begin the analysis using operational conditions such as those given in Table 2 as examples. As shown in Table 2, a large range of temperatures is possible for the transfer line and the injection valve, as well as for the equilibration times needed, depending on the exact type of equipment used.

NOTE Pressure in the vials at this stage should always be below the injection pressure (1,4 bar). Pressure in the glove box may exceed this, in which case it should be measured (in the glove box, or in the vial, with the gauge on the headspace equipment) and reduced if necessary. Ideally, it should be close to atmospheric pressure and should be known with precision in order to make corrections and calculations indicated in 7.5.5.2 and 7.5.5.3.

Record the actual atmospheric pressure throughout the run, since it may vary by several per cent over an extended run, especially if unattended, and it may be necessary to make corrections to total pressure in the vial.

7.5.4.3 Procedure for analysis at low concentration levels

The procedures described in 7.5.4.1 and 7.5.4.2 provide the detection limits specified in Table 5 for service tests. More sensitive procedures (and special attention to avoid contamination) are required to obtain the detection limits specified for acceptance tests, where extracted gases in the headspace of the vials are in the nl/l range.

Toepler and partial degassing, where extracted gases are in the µl/l range at these levels, are more recommended for acceptance tests. However, if headspace is to be used for low concentration levels and acceptance tests, the more sensitive equipment and procedures described below are required:

- capillary GC columns such as the PLOT columns described in 8.3.2;
- reduced dead volumes between the vial and the GC detectors;
- calibration with different calibration curves;
- manual (rather than electronic) integration of the baseline of GC peaks. This will lower the detection limits to typically 0,2 µl/l for hydrocarbons;
- for the still lower detection limits of acceptance tests, a larger injection loop of 1,5 ml, followed by a split of the gas sample between the vial and the GC columns (typically, of 1/50 to 1/100). This will result in much sharper GC peaks (particularly for hydrogen);

  NOTE The equipment may be instructed to automatically choose the splitter option (for example, 1/100 for acceptance tests and 1/10 for service tests).
- alternatively, a syringe may be used to manually transfer a gas sample from the vial to the injection port of the GC. This will eliminate the gas dilution resulting from Argon pressurization of the vial.

7.5.4.4 Procedure for analysis at high concentration levels

It has been observed that when hydrogen concentration levels are too high, the measured values are considerably below actual values. In such cases, a smaller volume of the oil sample should be used to obtain accurate results.

It has been found that when the hydrogen content is typically above 6 000 µl/l, a second sample with 7 ml of the oil sample in the vial and a third measurement with 3 ml in the vial should be performed. Valid results are obtained when identical values with two different dilution factors are measured.

When using procedure 7.5.5.2 (calibration with gas-in-oil standards), introduce the reduced volume of oil sample (7 ml or 3 ml) in a syringe, complete to 15 ml with degassed oil, then transfer into a vial and proceed as with regular oil samples. Multiply the measured values of gas in oil by the proper oil dilution factor (15/7 or 15/3).

When using procedure 7.5.5.3 (calibration with gas standards), introduce the reduced volume of oil in a vial and proceed as with regular oil samples. Calculate gas concentrations in the oil sample using the equation indicated in 7.5.5.3 and the proper values of V_G and V_L.

NOTE This non-linearity has been observed mainly with hydrogen dissolved in oil, but samples with high concentrations of the other dissolved gases should also be measured following a similar procedure.

7.5.5 Calibration of the headspace extractor

7.5.5.1 General remark

Two different calibration methods are available.

7.5.5.2 Calibration with gas-in-oil standards

This is the preferred method of calibration recommended by CIGRE TF D1.01.15.

The advantage of this method is that partition coefficients need not be determined. Neither is it affected by the linearity problems evidenced by the scatter of results observed during CIGRE inter-laboratory tests using partition coefficients.

Three gas-in-oil standards at different concentrations, prepared according to the methods described in 6.2 or 6.3, are run at least once a month or each time an operational parameter has changed (argon overpressure, new batches of vials or syringes) or if calibration of GC detectors with gas standards indicate a change in the response of detectors.

Direct calibration curves are drawn, relating peak height or peak area to the concentration of gases in the gas-in-oil standard.

When an unknown oil sample is run under exactly the same operational conditions, its dissolved gas concentrations C_L^{0*} can be obtained by using the above calibration curves. A small correction for the differences of atmospheric pressure and temperature when the gas-in-oil standard and unknown oil samples were analysed should be made:

$$C_L^0 = C_L^{0*} \times (P/P_s) \times [(273 + t_s)/(273 + t)]$$

(see 7.5.2 for abbreviations).

7.5.5.3 Calibration with gas standards

The advantage of this method is that there is no requirement to prepare gas-in-oil standards for direct calibration of the headspace extractor.

Partition coefficients need to be determined accurately, however, under exactly the same operational conditions as the oil samples (see 7.5.5.4).

A vial containing the gas standard, prepared according to 7.5.4.1.2.2, is placed in the headspace sampler and analysed through the headspace injection loop.

Calibration curves relating peak height or peak area to the concentration of the gases in the gas standard are drawn. When an oil sample is run under exactly the same operational

conditions, the concentration of the gases in the gas phase C_G can be obtained by using this calibration curve.

The concentrations in the oil sample are then determined using the following equation, based on Henry's law, which requires that the partition coefficients K and the actual vial volume ratio (V_G/V_L) for each oil sample be precisely determined.

$$C_L^0 = C_G \times \left(K + V_G/V_L\right)$$

NOTE 1 V_L and V_G are calculated according to 7.5.3.3.2 and 7.5.3.5.

A correction for atmospheric pressure and temperature should be made using Equation (1) (see 7.5.5.2), replacing “gas-in-oil standard” by “gas standard”. Generally, gas standards are prepared together with oil samples and so the temperature and pressure inside the vials before headspace extraction should be the same. Concerning the atmospheric pressure, it can vary during the time needed for analysing several samples; as a consequence, in some systems equipped with sample loops in equilibrium with atmospheric pressure, the amount of gas (number of moles) going to the detector through the sample loop can change. Because of this, the correction for atmospheric pressure should be made.

NOTE 2 Although it is not needed for calibration, it is recommended when using this procedure that the overall performance of the extractor be verified regularly by running gas-in-oil standards.

7.5.5.4 Determination of partition coefficients

The recommended method of determination of partition (or Ostwald or solubility) coefficients is the CIGRE TF D1.01.15 method consisting of bubbling pure gases in the oil according to ASTM Method D2780, or bubbling a standard mixture of gases in the oil.

It has been shown by CIGRE that partition coefficients measured by different laboratories using the headspace method and gas-in-oil standards, and/or the so-called slope/intercept method are not reliable and reproducible.

Examples of partition coefficients measured experimentally at 70 °C are given in Table 3.

Table 3 – Headspace partition coefficients at 70 °C in mineral insulating oil

	Mineral oil
Density	0,864
H_2	0,074
O_2	0,17
N_2	0,11
CH_4	0,44
CO	0,12
CO_2	1,02
C_2H_2	0,93
C_2H_4	1,47
C_2H_6	2,09
C_3H_6	5,04
C_3H_8	5,37
C_4H_6	10,10

8 Gas analysis by gas-solid chromatography

8.1 General remarks

Gas samples, whether obtained from gas-collecting relays or removed from an oil sample, are analysed by gas chromatography. The gases to be determined are as follows:

- Hydrogen H_2
- Oxygen O_2
- Nitrogen N_2
- Methane CH_4
- Ethane C_2H_6
- Ethylene C_2H_4
- Acetylene C_2H_2
- Carbon monoxide CO
- Carbon dioxide CO_2

For the purpose of this guide, C_3 hydrocarbons are not required, but they may on occasion give useful information.

A number of methods may be used for the analyses; the two methods detailed in Table 4 are given as examples that have been found suitable for all extraction techniques.

The following assumes a measure of competence in the techniques of gas chromatography and omits, for brevity, many details that may be found in practical manuals on these techniques.

Table 4 – Examples of gas chromatographic operating conditions

	Example 1	Example 2
Type of columns	**Packed**	**PLOT**
Column 1	Porapak N ®[2] or Haysep N ®[3], L = 3 ; D = 3	Carboxen 1 006 ® [4] or Carboplot P7 ®[5], L = 30 ; D = 0,5
Column 2	Molecular sieve 5A or 13x L = 0,5 ; D = 3	Molecular sieve 5A (50 µm) L = 30 ; D = 0,5
Temperature (°C) of:		
Column bypass valve	120	90

2 Porapak ® is the trade name of products supplied by Water Associates. (Porapaks ® are porous polymer beads modified to give different retention characteristics. Eight types are available; in order of increasing polarity these are Porapak ® P, PS, Q, QS, R, S, N, and T). Haysep ® products are polymers of a similar type. This information is given for the convenience of users of this standard and does not constitute an endorsement by the IEC of the products named. Equivalent products may be used if they can be shown to lead to the same results.

3 Haysep N ® is the trade name of products supplied by VICI Valco Instruments. This information is given for the convenience of users of this standard and does not constitute an endorsement by the IEC of the products named. Equivalent products may be used if they can be shown to lead to the same results.

4 Carboxen ® is the trade name of products supplied by Sigma-Aldrich. This information is given for the convenience of users of this standard and does not constitute an endorsement by the IEC of the products named. Equivalent products may be used if they can be shown to lead to the same results.

5 Carboplot ® is the trade name of products supplied by Agilent Technologies. This information is given for the convenience of users of this standard and does not constitute an endorsement by the IEC of the products named. Equivalent products may be used if they can be shown to lead to the same results.

	Example 1	Example 2
Type of columns	**Packed**	**PLOT**
FID	250	250
HID	250	250
TCD	200	200
Methanator	400	350
Oven	35-180	40-100
Gases separated		
On column 1	CO_2 (TCD) CO_2 *, C_nH_n, (FID)	C_2H_4, C_2H_2, C_2H_6, CO_2 * (FID)
On column 2	H_2, O_2, N_2, CO (TCD) CO * (FID)	H_2, O_2, N_2, CO (TCD) CH_4, CO * (FID)
Argon carrier gas	25 ml/min	6 ml/min
NOTE L = length (in meters), D = diameter (in mm). * CO and CO_2 converted into CH4 by methanator.		

8.2 Outline of suitable methods using Table 4

In example 1 of Table 4, two separate runs are made, one with a Porapak ® column and the other with a molecular sieve column. A single detector having adequate sensitivity for all the gases to be detected is not available; thus, the gases eluted from the column in use are passed over both a thermal conductivity detector which detects atmospheric gases, CO, CO_2 and H_2 and a flame ionization detector which detects hydrocarbons.

To determine CO and CO_2 with improved sensitivity, a methanator may be fitted at the inlet of the flame ionization detector to convert CO and CO_2 to methane, which is then detected by the flame ionization detector.

In example 2 of Table 4, more sensitive PLOT (porous large open tubular) columns are used, particularly in the case of headspace extraction.

When using a stripping extraction method, it may not be possible to achieve the sensitivity and precision for hydrocarbons required for factory tests using less than 5 ml of oil. Larger volumes of oil (10 ml) require longer stripping times to extract the dissolved gases, which would give unacceptable gas chromatograms unless the extracted gases were to be concentrated by cold trapping.

The method below is written for an apparatus in which the outputs from the detectors are switched electrically so that they may be dealt with by a single channel integrator or single channel chart recorder. Use of a dual channel integrator or recorder eliminates the need for switching.

8.3 Apparatus

8.3.1 Gas chromatograph

Figure 13 is an example of the layout of an instrument that has been used and found acceptable. Injection arrangements shall suit the method by which gas is transferred from gas extraction equipment into the chromatograph.

Thus, the vacuum extraction equipment described in Figure 6 and used for both Toepler pump and partial degassing methods transfers the gas via a gas sample valve and calibrated sample loop, a method recommended to improve repeatability.

Alternatively, gas samples may be transferred and injected into the chromatograph using a precision gas-tight syringe, and this latter method is generally used for gas samples from gas-collecting relays.

In the case of extraction by stripping (see Figure 9), a sampling valve is used, with the stripper inserted in place of the sample loop as shown in Figure 9a. Arrangements where a stripper plus cold trap are used are shown in Figure 9b.

In the case of the headspace method, the headspace accessories described in 7.5.3.2, a bypass valve, and a zero-dead volume adapter (0,53 mm ID) for the column connections are used for injecting extracted gases.

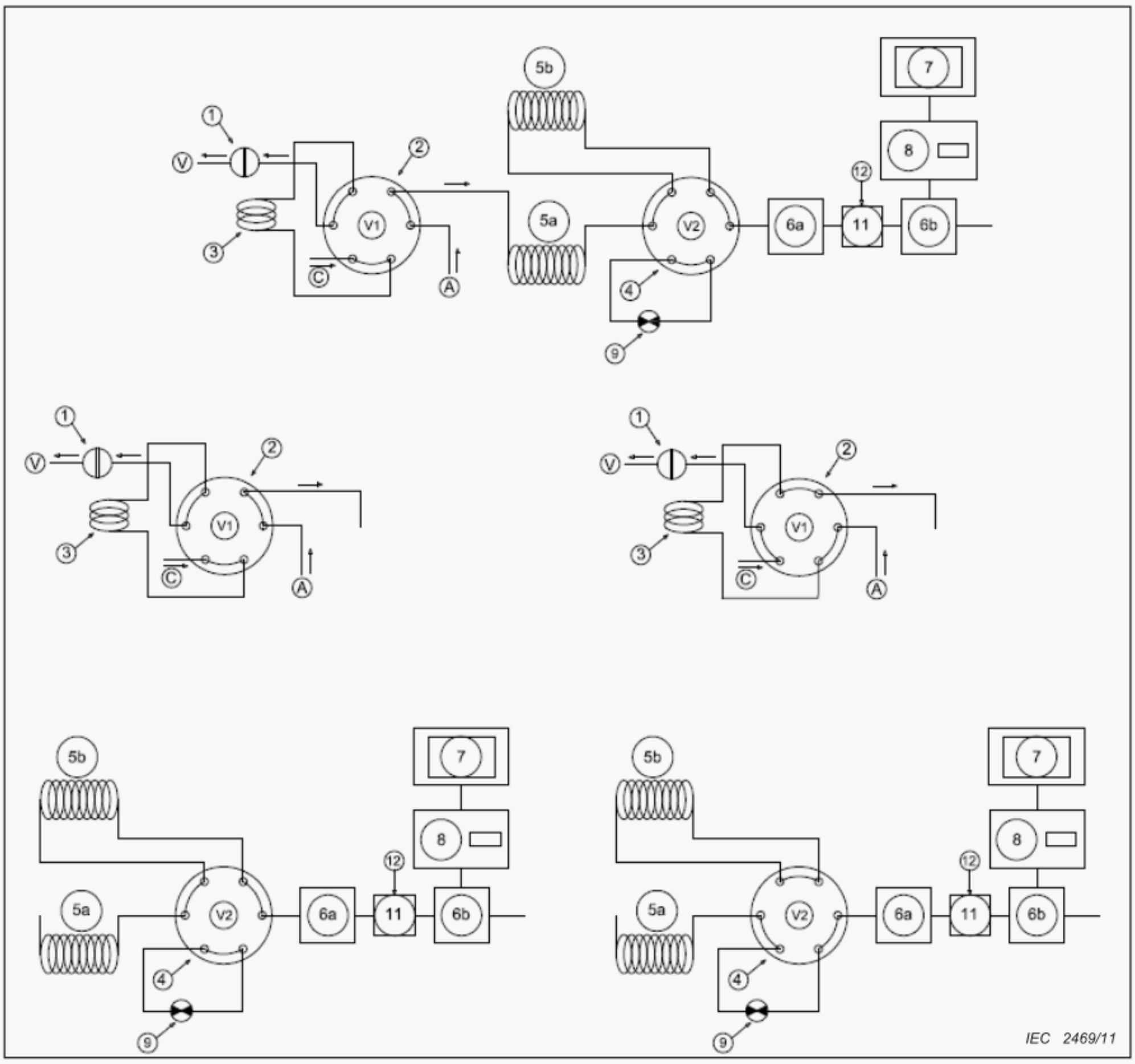

Key

Position A: Sample loop filling

1 stopcock
2 chromatograph gas sample valve
3 sample loop
4 column selector valve
5 columns a) column 1
b) column 2
6 detectors a) thermal conductivity
b) flame ionization
7 recorder

Position B: Injection

8 integrator
9 optional restriction valve for pressure compensation
10 switch
11 methanator
12 H_2 for catalysis
A inlet carrier gas
B outlet carrier gas (to GC)
C injection of gas sample
V connection to vacuum

Figure 13 – Schematic arrangement for gas chromatography

8.3.2 Columns

In the present examples of Table 4, two columns are used with a two-way valve enabling selection between the columns.

However, the important requirement for all columns is that they should achieve good separation in as short a time as possible, while giving all elutions on a stable baseline. The columns indicated in Table 4 are given only by way of examples and other columns meeting these general requirements may be used.

In the case of the headspace method, the packed columns described in example 1 of Table 4 can be used for the routine analysis of oils; however, at low gas-in-oil concentration levels, gases shall be detected in the headspace phase at the nl/l level. This requires the use of the PLOT columns of example 2 of Table 4. At these nl/l gas levels, special care should be taken to prevent contamination and in the control of the GC detectors.

8.3.3 Carrier gas

The carrier gas is, preferably, gas chromatograph grade argon.

8.3.4 Detectors

The gases eluted from the columns are passed over a thermal conductivity detector (TCD) and a flame ionization detector (FID). A helium ionization detector (HID) can be used instead of the FID and TCD. The HID is 10 times more sensitive than FID, using helium as a carrier gas and does not require the use of a methanator.

8.3.5 Methanator

In the present examples, a methanator is fitted at the inlet to the flame ionization detector to improve the sensitivity with which CO and CO_2 can be detected by converting these gases to methane.

NOTE The activity of the methanator may be impaired by the presence of sulphur hexafluoride (this gas is sometimes used in cable terminal boxes and may diffuse into the equipment filling oil). In this case, a different analytical arrangement should be used which is not described in this standard.

The methanator may lose some sensitivity (and the CO_2/C_2H_4 and CO/CH_4 ratios decrease) with time, but may be recalibrated.

8.3.6 Cold trap

When the stripping method is used, a cold trap may be fitted at the outlet of the stripper to improve the sensitivity for hydrocarbons.

Figure 9b shows an example of the method of inclusion of a cold trap. A typical device used consists of a 130 mm long, 6 mm OD, stainless steel tube packed with 100/120 mesh Porapak Q ® or equivalent, maintained below –54 °C in a suitable freezing mixture such as solid carbon dioxide and alcohol.

During stripping, a separate carrier gas stream circulates in the cold trap while the main carrier gas flows directly to the gas chromatograph. After stripping, a valve is switched to direct the carrier gas flow through the cold trap. Then the trap is rapidly heated to 80 °C, injecting the trapped gases onto the analytical columns.

8.3.7 Integrator and recorder

The electrical outputs from the detectors are fed to an integrator. Additionally or alternatively, a chart recorder may be used.

8.4 Preparation of apparatus

a) Set up the chromatograph and allow the flow of carrier gas and the temperature to stabilize as shown by the production of a steady baseline.

b) For the vacuum extraction methods, either inject the gas sample using a syringe or with the gas sample loop previously evacuated.

c) For the stripping method, introduce the oil sample into the stripper by means of a precision syringe.

d) For the headspace method, inject the extracted gases using accessories indicated in 8.3.1.

8.5 Analysis

See Figure 13.

A possible procedure using one chromatograph fitted with two columns, a gas-sampling valve and a methanator is given below (example 1 of Table 4).

a) Adjust the selector valve (4) (position A) to bring the Porapak ® (5a) or equivalent column into use.

b) Turn the sample valve (2) to introduce the gas sample.

c) Use the switch (10) to select the flame ionization detector (6b). The first peak to emerge will be CO converted to CH_4 by the methanator. The second peak will be CH_4. The third peak is CO_2 converted to CH_4 by the methanator, and this is followed by C_2H_4, C_2H_6 and C_2H_2.

NOTE The CO and CO_2, having been converted to CH_4 by the methanator, are detected at high sensitivity by the flame ionization detector. High concentrations of these gases may well exceed the linear range of this detector. In this case, use may be made of a thermal conductivity detector to evaluate the CO_2 before methanation.

d) Adjust the selector valve (4) (position B) to bring the molecular sieve column into use. Obtain a stable baseline.

e) Refill the gas sample loop according to step j) of 7.2.3.

f) Turn the sample valve (2) to introduce the gas sample.

g) Use the switch (10) to select the thermal conductivity detector (6a). Peaks will emerge in the following order: H_2, O_2 and N_2.

h) Use the switch (10) to select the flame ionization detector (6b). The next peak will be CH_4; the last peak to emerge will be CO converted to CH_4 by the methanator.

i) Purge any retained gases from both columns.

j) One determination per gas sample is normally sufficient.

8.6 Calibration of the chromatograph

Retention times are established by injection of dilutions of individual gases in the carrier gas into the columns. The response factors of the detectors, however, are preferably determined using a standard gas mixture diluted with the carrier gas, containing known concentrations of all gas components to be determined, in proportions resembling those found in oils from transformers. Such a standard mixture should be used periodically, depending upon the stability of the equipment. For better precision, calibration should be undertaken immediately before analysis of the oil sample.

The minimum number of standard gas mixtures needed for calibration of the chromatograph varies from 1 to 3. Only one is needed when performance of analysis equipment has been found linear (by verification of the entire system) in the concentration range of gases usually found in transformer oil.

A different standard for verification of GC detectors should be run at least once a day.

8.7 Calculations

a) Identify the gas corresponding to each peak by comparison with the chromatograms obtained during calibration.

b) Measure the area or height of each peak, note its retention time and apply the calibration data to obtain the gas volumes.

c) When dealing with analyses of gases taken from gas collecting relays, calculate the concentration of each gas in per cent by volume.

d) When dealing with analyses of gases extracted from oil, calculate the concentration in microlitres of each gas per litre of the oil from which it was extracted (or micromole of each gas per litre of oil).

Dissolved gas concentrations in the oil sample C_L^0 should be converted to these standard conditions (101,325 kPa and 20 °C), using the following equation:

$$C_L^0(\text{corrected}) = C_L^0 \times (P/101{,}325) \times (293/(273+t))$$

where

C_L^0 is the concentration of gases in the oil sample at ambient temperature and pressure;

t is the ambient temperature, in °C;

P is the atmospheric pressure, in kPa.

NOTE 1 1 µl/ l corresponds to 1 ppm by volume and 0,042 µmol/l at 20 °C and 101,3 kPa.

NOTE 2 Concentrations in µmol/l can be converted to µl/l or ppm, under these standard conditions, by multiplying by 22,4 (293/273).

NOTE 3 The total gas content of oil by volume, expressed as a percentage, in the case of partial degassing, stripping and headspace methods, can be estimated by the sum of the individual gas concentrations expressed in µl/l under these standard conditions.

9 Quality control

9.1 Verification of the entire analytical system

The preferred method of ensuring that the entire system (extraction and chromatography) gives stable and accurate results is by analysing a known quantity of gas-in-oil standards (containing all the gases listed in 8.1 in proportions resembling those found in oils taken from transformers) in place of an oil sample and carrying out all the procedures detailed above.

In the case of the Toepler pump extraction method, it has been confirmed that the extraction efficiency and performance of the whole analysis equipment can be verified by the daily analysis of an air-saturated oil standard (see Annex C) and one standard gas mixture with average gas concentrations in the range usually found in transformer oil samples.

It is recommended to use at least two gas-in-oil standards, one containing low concentrations of gases (resembling oils in factory tests) and the other containing higher concentrations (resembling oils from equipment in the field) to check the quality of the results produced by the analytical system in the entire linearity range. The chromatogram peak areas or heights can then be related directly to the quantities of gases present in the oil, compensating automatically for incomplete extraction and other operational factors.

It is good practice to repeat this procedure at intervals of calibration of not more than six months or following changes in apparatus or operating conditions.

9.2 Limits of detection and quantification

The basic requirement is that the analytical system, consisting of degassing equipment and gas chromatograph, shall have adequate sensitivity for the task for which it is designed.

Not only the detection limit, but also the sensitivity, the repeatability and the accuracy of results depend on many details of the overall procedure, in particular the method of extraction and the design and method of operation of the gas chromatograph and its ancillaries.

For example, by using a methanator combined with a flame ionization detector, instead of using a thermal conductivity detector, the sensitivity and detection limit for the carbon oxides are considerably improved.

Tests on equipment in service where the dissolved gas concentration is often high do not require the same detection limits as factory tests where gas concentrations are usually very low.

In the case of headspace, extraction efficiency is low, and the concentration of gases in the extracted gas phase typically 100 times lower than with the other extraction methods. At low gas-in-oil concentration levels, detection limits in the nl/l range in the gas phase of the headspace are therefore necessary, requiring the use of more sensitive equipment and procedures (see 7.5.4.3).

It is necessary that each laboratory determines overall procedures that will give suitable sensitivities for all gases. For guidance, experience indicates that the entire analytical system should be capable of detecting gases dissolved in oil at the concentrations indicated in Table 5.

For the analysis of gas samples taken from gas-collecting relays, a detection limit equivalent to that obtained for the analyses of gases extracted from the oil for service tests is adequate.

NOTE The limit of detection is defined as the lowest concentration that can be identified. The limit of quantification is defined as the lowest concentration that can be quantified with a reasonable precision and accuracy.

Table 5 – Required limits of detection in oil

	Acceptance tests		Service tests	
Gases	Concentrations at 20 °C			
	µl/l	µmol/l	µl/l	µmol/l
Hydrogen	2	0,08	5	0,2
Hydrocarbons	0,1	0,004	1	0,042
Carbon monoxide	5,0	0,2	25	1,0
Carbon dioxide	10	0,4	25	1,0
Oxygen	500	21	500	21
Nitrogen	2 000	84	2 000	84

9.3 Repeatability, reproducibility and accuracy

9.3.1 General remark

Repeatability (r), reproducibility (R) and accuracy are defined in detail in ISO 5725.

9.3.2 Repeatability

Repeatability is related to the differences that are observed when the same oil sample is analysed several times by the same laboratory over the same day or a short period of time.

Having established methods that give adequate overall detection limits, each laboratory shall confirm that these methods give adequate repeatability following the procedure described in ISO 5725.

For gas concentration levels greater than 10 µl/l the repeatability of a laboratory shall be considered as acceptable if the absolute difference (A – B) of two measurements A and B satisfies the following equation:

$$r = (A - B) < k \times (A + B)/2$$

which means that the repeatability of the laboratory, at 95 % confidence limit, is lower than k times the mean concentration of the gas analysed. The k coefficient depends on the nature of the gas analysed.

A general acceptable value, calculated from an international IEC inter-laboratory test is: k = 0,07 for concentrations > 10 µl/l and < 1 000 µl/l, and k = 0,10 for concentrations >1 000 µl/l.

For low gas concentrations (for example, < 10 µl/l), the required repeatability is given by the following equation: $r = S$ (where S = detection limit), whatever the concentration, as deduced from the same international IEC inter-laboratory test.

It is recommended that each laboratory check its own individual repeatability at both concentration levels at appropriate time intervals or after major changes on its system (gas extractor and gas chromatograph). To do that, a sufficient number of analyses on multiple samples of the same oil are run within a short period of time (less than one day), then the repeatability of results r is determined according to ISO 5725.

9.3.3 Reproducibility

Reproducibility is related to the differences which are observed when the same oil sample is analysed by different laboratories (inter-laboratory reproducibility), or when it is analysed by the same laboratory over long periods of time (after several days, weeks or months) (intra-laboratory reproducibility).

Inter-laboratory reproducibility has been evaluated by CIGRE as around ± 20 % at medium concentration levels.

It is recommended that each laboratory check its own intra-laboratory reproducibility at different concentration levels at appropriate time intervals or after major changes on its system (gas extractor and gas chromatograph). To do that, analyse multiple samples of the same oil at regular intervals of time, for instance each week or each month over a period of several months, then determine the reproducibility of results R according to ISO 5725.

A good conservation of the samples is necessary between analyses. Storing the samples in a fridge is recommended to avoid reactions with light and oxygen present in the oil.

9.3.4 Accuracy

Accuracy is related to the differences that are observed between the values analysed by a laboratory and the true values of dissolved gases contained in the oil sample.

Inaccurate DGA results may lead to wrong fault diagnoses, especially if gas ratios are close to a fault zone boundary, or to inappropriate actions on the equipment, if concentration values are close to the typical or alarm values defined in IEC 60599.

To be able to determine accuracy the nominal values of dissolved gas concentrations have to be known. The mean of several measured values has been shown by inter-laboratory tests to be different from the nominal values. Determination of accuracy shall be carried out with gas-in-oil standards prepared according to Clause 6, or through participation to round robin tests using such standards, or with certified gas-in-oil standards prepared according to ISO 5725.

Examples of accuracies that can be obtained using the overall experimental procedure are given in Table 6. These values are deduced from IEC and CIGRE inter-laboratory tests made on two gas-in-oil standards (prepared according to 6.2) and involving 44 laboratories worldwide. One standard sample contained medium gas concentration levels (hydrocarbons between 9 µl/l and 60 µl/l, CO and CO_2 between 100 µl/l and 500 µl/l). The other one contained low gas concentration levels (hydrocarbons between 1 µl/l and 10 µl/l, CO and CO_2 between 30 µl/l and 100 µl/l).

It is recommended that each laboratory determines its own accuracy, which may differ from the values in Table 6. To do that, analyse a gas-in-oil standard according to Clause 6, then determine the accuracy according to ISO 5725.

Table 6 – Examples of accuracy of extraction methods

	Accuracy, in percentage of the nominal value	
Extraction procedure	**Medium concentration**	**Low concentration**
Toepler	13	35
Partial degassing	13	30
Stripping	18	23
Headspace	18	37
Mercury-free Toepler	15[a]	14[a]
Mercury-free partial degassing	11[a]	
Shake test	15	44
[a] Based on a limited number of analyses.		

10 Report of results

The report for DGA shall include

- a reference to this standard;
- information on the gas or oil sample (see Clause 4 of this standard or 4.4 of IEC 60475:2011, respectively);
- the sampling procedure used (for example, syringe, bottle) (see Clause 3 of this standard and Clause 4 of IEC 60475:2011, respectively);
  - the extraction procedure used (for example, Toepler, headspace) (see Clause 7 and Annex B);
  - for headspace analysis, reference for the Ostwald coefficients used in case of calibration with gas standards (see 7.5.5.3);
- the detection limits for each gas with the analysis procedure used (see 9.2);
- for each gas analysed, the results in µl/l or in µmoles/l (see 8.7).

NOTE 1 When available, it may be useful for diagnosis purposes to indicate the average accuracies obtained by the laboratory at these gas levels with the analysis procedure used (see 9.3.4).

NOTE 2 Guidelines for drafting the report in terms of quality assurance can be found in ISO/IEC 17025.

Annex A
(informative)

Correction for incomplete gas extraction in partial degassing method by calculation

From the chromatogram, the sample oil volume, the calculated total volume of gas extracted and the volume of the aliquot of gas passed into the chromatograph, determine the apparent volume concentration C_i of each component gas extracted from the oil.

Calculate the equilibrium extraction efficiency for each component gas from

$$E_i = 1/(1 + a_i V_0 / V_t)$$

where

E_i is the extraction efficiency for component i;

V_0 is the volume of the oil sample, in ml;

V_t is the total expansion volume, in ml (see 7.3.3);

a_i is the Ostwald solubility coefficient of component i.

Examples of solubility coefficients for typical mineral oils are shown in Table A.1.

Table A.1 – Examples of solubility coefficients a_i (at 25 °C) reported by CIGRE TF D1.01.15

Gas	Mineral oils	Natural esters	Synthetic esters	Silicone oils
Hydrogen	0,055 6	0,047 0	0,051 0	0,092 4
Nitrogen	0,090 7	0,072 8	0,087 2	0,157
Carbon monoxide	0,132	0,111	0,127	0,204
Oxygen	0,172	0,134	0,152	0,266
Methane	0,429	0,341	0,381	0,569
Carbon dioxide	1,09	1,54	2,05	1,63
Acetylene	1,24	2,68	4,38	2,04
Ethylene	1,84	1,69	1,87	2,18
Ethane	2,82	2,16	2,19	3,10

The data given in Table A.1 represent mean values obtained by bubbling the pure gases in some of the current types of transformer oils. The actual data on specific types of oils may differ a little from these figures.

The data given in the above table represent mean values obtained on some of the current types of transformer oils. The actual data may differ a little from these figures.

Calculate the corrected volume concentration of each gas in the oil from:

$$C_i \text{ (corrected)} = C_i \text{ (apparent)}/E_i$$

NOTE 1 Solubility coefficients are functions of temperature and of oil density.

NOTE 2 Instead of correcting for incomplete gas extraction by calculation, calibration of the partial degassing method with several gas-in-oil standards at different concentration levels may be used.

NOTE 3 When using the partial degassing method, the measurement of total gas content may need to be corrected (by a factor of up to 60 %) in order to take into account the vapour pressure of water, which depends on the water content in oil.

Annex B
(informative)

Mercury-free and shake test versions of the standard extraction methods

A mercury-free version of the Toepler method is available commercially. In this equipment, mechanical pistons are used instead of the mercury piston to extract the dissolved gases and recompress them.

A typical schematic representation of this equipment is indicated in Figure B.1a. Some versions can be automated with an oil sample carousel so that large numbers of samples can be injected and analysed on a 24 h basis with unattended operation.

A mercury-free version of the partial degassing method is available commercially. In this equipment, mechanical pistons are used instead of the mercury piston to extract the dissolved gases and recompress them.

A typical schematic representation of this equipment is indicated in Figure B.1b.

A simplified version of the headspace method is available commercially (the so-called “shake-test” method). In this version, an oil sample (90 ml) is introduced in a 100 ml precision glass syringe rather than in a glass vial. 10 ml of air are then introduced in the syringe. The syringe is shaken vigorously by hand to extract the dissolved gases. Equilibrium is reached in less than 2 min because of the high shaking efficiency. An aliquot of the extracted gases is then injected in a portable chromatograph for on-site analysis, or in a standard laboratory chromatograph. A typical schematic representation of this equipment is indicated in Figure B.1d.

Examples of accuracies that can be obtained using these methods are given in Table 6.

These values are deduced from inter-laboratory tests made on two gas-in-oil standards prepared as in 9.3 and involving 10 laboratories world wide (2 for mercury-free Toepler, 1 for mercury-free partial degassing, and 7 for the shake test).

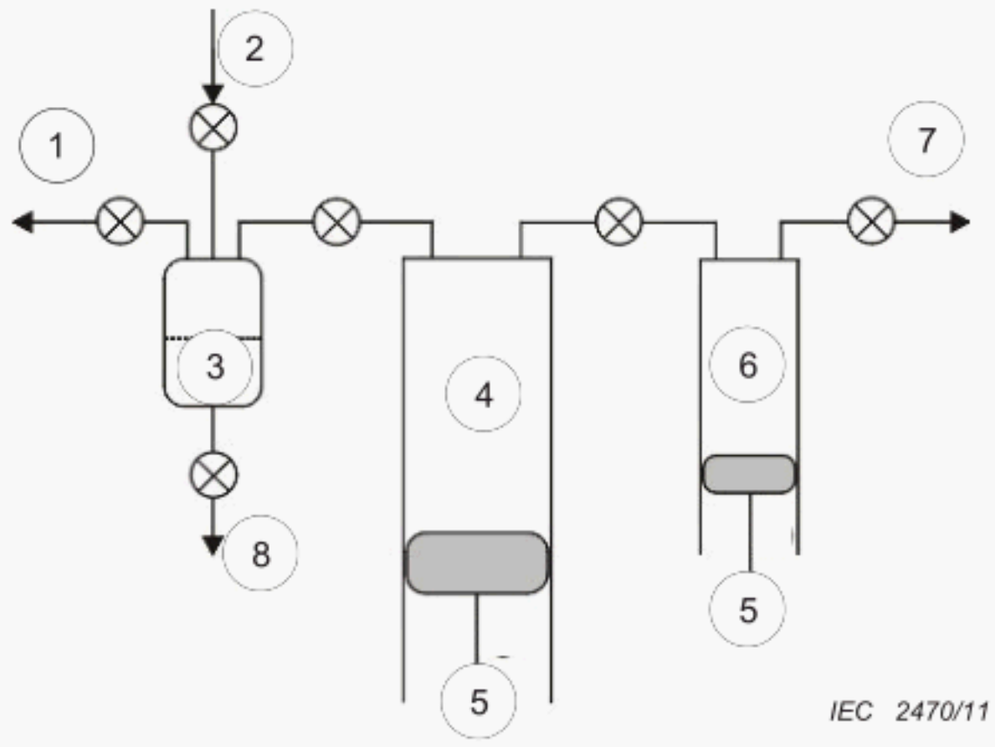

Key
1 vacuum pump
2 oil inlet
3 oil sample
4 gas extraction chamber
5 piston
6 gas compression chamber
7 to GC injection loop and detectors
8 oil purge

Figure B.1a – Mercury-free Toepler

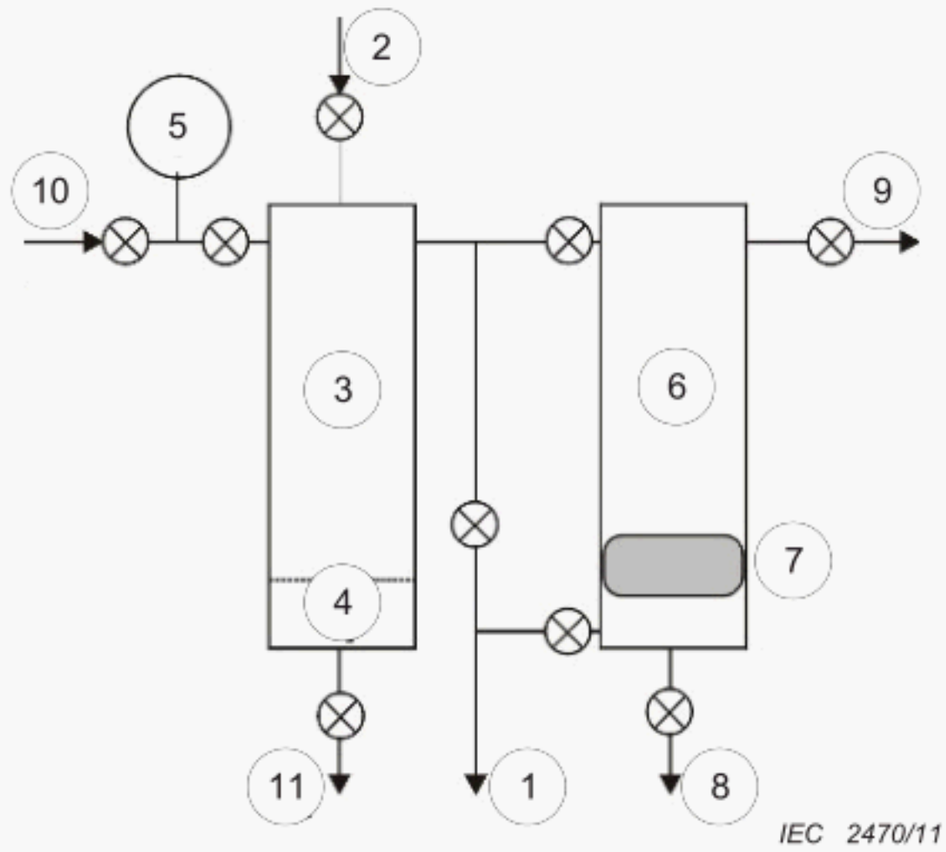

Key
1 vacuum pump
2 oil inlet
3 gas extraction chamber (glass)
4 oil sample
5 pressure gauge
6 gas compression chamber (glass)
7 piston
8 atmospheric air
9 to GC injection loop and detectors
10 calibration gas
11 oil purge

Figure B.1b – Mercury-free partial degassing

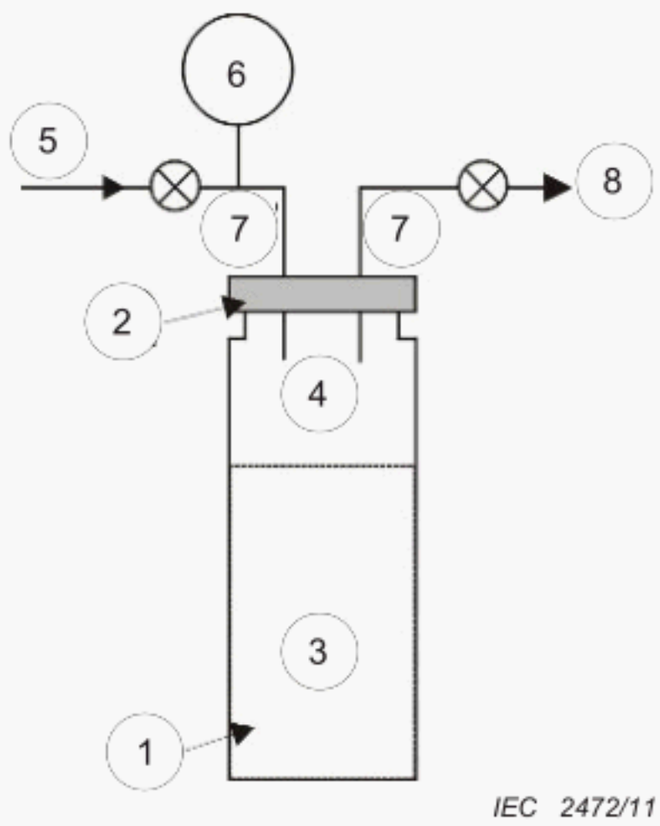

Key
1 vial
2 septum
3 oil sample
4 gas phase (Ar or He)
5 carrier gas (Ar or He)
6 pressurization gauge
7 needle
8 to GC injection loop and detectors

Figure B.1c – Headspace

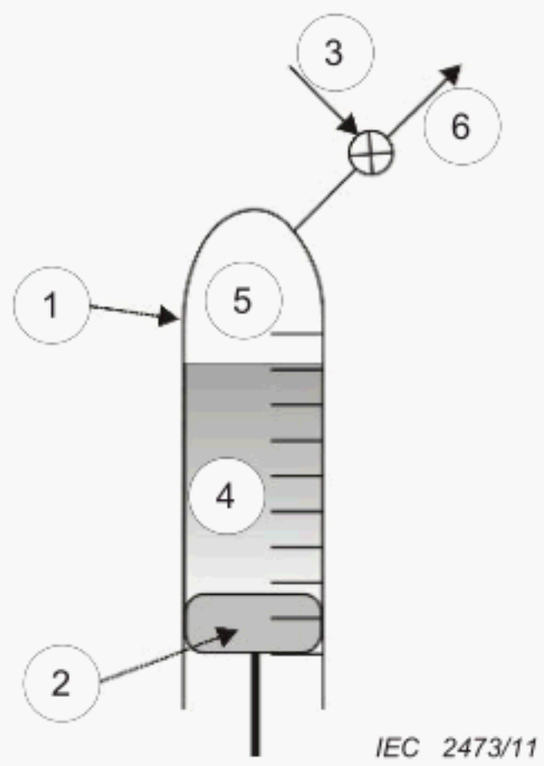

Key
1 precision syringe
2 piston
3 oil/air inlet
4 oil sample
5 gas phase (air)
6 to GC injection loop and detectors

Figure B.1d – Shake test

Figure B.1 – Schematic representation of methods in Annex B

Annex C
(informative)

Preparation of air-saturated standards

Keep a batch of new transformer mineral or non-mineral oil in an open container at room temperature for at least one week. Measure the oxygen and nitrogen content in the oil, using any one of the gas extraction methods, then the air content of the oil at saturation.

The gas extraction equipment is checked with this air-saturated oil standard (see 9.1) and found correct if the average total gas content measured corresponds to the value measured for this type of oil, with a standard deviation of 3 %.

The gas extractor and the gas chromatograph are checked by the retention times and concentrations of O_2, N_2 and CO_2 in this air-saturated oil standard. All three retention times should be in accordance with those obtained with gas standard mixtures.

The solubility of air in oil at saturation depends on atmospheric pressure and temperature and on the type of oil used. Examples of solubility values of air for different types of oils, as reported by CIGRE TF D1.01.15, are indicated in Table C.1.

Table C.1 – Examples of solubility values of air for different oil types

Fluid	Density at 20 °C	µl/l at 20 °C			
		O_2	N_2	CO_2	Air
Mineral oil 1	0,851 8	29 980	65 320	569	95 869
Mineral oil 2	0,888 2	32 080	61 780	537	94 397
Natural ester 1	0,921 0	21 995	49 613	647	72 255
Natural ester 2	0,915 8	24 507	50 177	625	75 309
Synthetic ester	0,919 7	21 705	45 269	555	67 529
Silicone oil	0,964 5	54 938	113 078	763	168 779

Examples of variations with temperature of the solubility of oxygen and nitrogen in a mineral oil as reported by CIGRE TF D1.01.15 are given in Table C.2.

Table C.2 – Examples of temperature variations for oxygen and nitrogen solubility in mineral oil

Temperature °C	O_2	N_2
13	32 937	62 798
21,5	32 750	63 728
25	32 483	64 061
50	31 465	66 141

Annex D
(informative)

Correction for gas bubbles in syringes and air gap in rigid bottles

It has been found by CIGRE TF D1.01.15 that gas bubbles are observed in oil in about 20 % of syringes on average (this value may be lower or higher depending on the experience of samplers).

When using the Toepler, partial degassing and stripping methods, the bubble is introduced into the extraction vessel (see 7.2.3, point e), NOTE 1), and no correction is necessary. When using the headspace method, the bubble should not be introduced in the vial, and a correction for the gases having migrated into the bubble should be made.

In glass or rigid metal bottles, the air gap volume used as an oil expansion device is about 2 ml to 5 ml depending on the size of the bottle (1 l or 2 l). A correction for the gases having migrated into the air gap should also be made.

The following equation can be used for that purpose, for each gas measured:

$$C_C = C_m \left(1 + V_G / \left(kV_L + V_G\right)\right)$$

where

C_C is the corrected concentration, in µl/l;

C_m is the measured concentration, in µl/l;

V_G is the volume of bubble in the syringe, or volume of air gap in the glass bottle, in ml;

V_L is the volume of oil in the syringe or glass bottle, in ml;

k is the Ostwald (solubility) coefficient.

NOTE In general, the corrections to be made (10 % to 5 %) are significant only for the less soluble gases (H_2, CO).

Annex E
(informative)

Procedure for comparing gas monitor readings to laboratory results

Gas monitors (installed on-line on electrical equipment in service or used as portable instruments) are increasingly used in industry. In some cases, monitors readings do not quite agree with laboratory results for the same equipment, and it is not possible to know for sure which is right, monitors readings or laboratory results.

The following procedure has been developed by CIGRE TF15 to make such an evaluation (see CIGRE TB 409).

- Purchase a sample of gas-in-oil standard from an appropriate vendor, or prepare one according to IEC 60567 (this standard) or ASTM D3612.
- Take a reading on one or several on-line gas monitors installed on transformers in service.
- Take 4 duplicate samples of oil from the sampling point of the monitor(s), immediately after having taken the reading.
- For portable gas monitors, take 5 duplicate samples of oil from a transformer. Using one of the 5 samples, take a reading of the portable monitor.
- Send all the above samples of oil to the DGA laboratory.
- Analyse all samples on the same day (or over no more than a few days), using the same analytical equipment for all samples.
- Convert all DGA results and monitor readings to the same units (IEC or STP µl/l).
- Calculate the bias of the laboratory by comparing its results for the gas-in-oil standard sample to what was actually prepared.
- Correct all other DGA lab results using the bias calculated above.
- Calculate the average values (A) of each set of 4 duplicate samples, in µl/l.
- Calculate the repeatability (R) of laboratory results as the difference between results for the individual 4 samples and average values (A), and express it as a percentage.
- Calculate the difference (D) between gas monitor readings and average values (A), and express it as a percentage.
- The maximum accuracy of the gas monitor as measured by the laboratory is (D – R – 2), in per cent, where 2 % is the uncertainty on the gas-in-oil standard.

For example, if

- gas-in-oil standard S = 100 µl/l, laboratory result for S = 90 µl/l,
- laboratory results for 4 duplicate samples = 250, 230, 210, 240 µl/l,
- laboratory results corrected for bias = 275, 253, 231, 264 µl/l,
- average value (A) = 256 µl/l, repeatability (R) = 9 %,
- monitor reading = 300 µl/l, difference (D) = +17 %,
- maximum accuracy of gas monitor = (17 – 9 – 2) = +6 %.

Bibliography

[1] ISO/IEC 17025, *General requirements for the competence of testing and calibration laboratories*

[2] ISO 3675, *Crude petroleum and liquid petroleum products – Laboratory determination of density – Hydrometer method*

[3] CIGRE Technical Brochure 409, *Report on gas monitors for oil-filled electrical equipment, 2010*

[4] CIGRE Technical Brochure 443, *Report on DGA in non-mineral oils and load tap changers and improved DGA diagnosis criteria,* Electra 253, December 2010

[5] ASTM D3612, *Standard Test Method for Analysis of Gases Dissolved in Electrical Insulating Oil by Gas Chromatography*

This page deliberately left blank

NO COPYING WITHOUT BSI PERMISSION EXCEPT AS PERMITTED BY COPYRIGHT LAW

British Standards Institution (BSI)

BSI is the national body responsible for preparing British Standards and other standards-related publications, information and services.

BSI is incorporated by Royal Charter. British Standards and other standardization products are published by BSI Standards Limited.

About us

We bring together business, industry, government, consumers, innovators and others to shape their combined experience and expertise into standards -based solutions.

The knowledge embodied in our standards has been carefully assembled in a dependable format and refined through our open consultation process. Organizations of all sizes and across all sectors choose standards to help them achieve their goals.

Information on standards

We can provide you with the knowledge that your organization needs to succeed. Find out more about British Standards by visiting our website at bsigroup.com/standards or contacting our Customer Services team or Knowledge Centre.

Buying standards

You can buy and download PDF versions of BSI publications, including British and adopted European and international standards, through our website at bsigroup.com/shop, where hard copies can also be purchased.

If you need international and foreign standards from other Standards Development Organizations, hard copies can be ordered from our Customer Services team.

Subscriptions

Our range of subscription services are designed to make using standards easier for you. For further information on our subscription products go to bsigroup.com/subscriptions.

With **British Standards Online (BSOL)** you'll have instant access to over 55,000 British and adopted European and international standards from your desktop. It's available 24/7 and is refreshed daily so you'll always be up to date.

You can keep in touch with standards developments and receive substantial discounts on the purchase price of standards, both in single copy and subscription format, by becoming a **BSI Subscribing Member**.

PLUS is an updating service exclusive to BSI Subscribing Members. You will automatically receive the latest hard copy of your standards when they're revised or replaced.

To find out more about becoming a BSI Subscribing Member and the benefits of membership, please visit bsigroup.com/shop.

With a **Multi-User Network Licence (MUNL)** you are able to host standards publications on your intranet. Licences can cover as few or as many users as you wish. With updates supplied as soon as they're available, you can be sure your documentation is current. For further information, email bsmusales@bsigroup.com.

Revisions

Our British Standards and other publications are updated by amendment or revision.

We continually improve the quality of our products and services to benefit your business. If you find an inaccuracy or ambiguity within a British Standard or other BSI publication please inform the Knowledge Centre.

Copyright

All the data, software and documentation set out in all British Standards and other BSI publications are the property of and copyrighted by BSI, or some person or entity that owns copyright in the information used (such as the international standardization bodies) and has formally licensed such information to BSI for commercial publication and use. Except as permitted under the Copyright, Designs and Patents Act 1988 no extract may be reproduced, stored in a retrieval system or transmitted in any form or by any means – electronic, photocopying, recording or otherwise – without prior written permission from BSI. Details and advice can be obtained from the Copyright & Licensing Department.

Useful Contacts:

Customer Services
Tel: +44 845 086 9001
Email (orders): orders@bsigroup.com
Email (enquiries): cservices@bsigroup.com

Subscriptions
Tel: +44 845 086 9001
Email: subscriptions@bsigroup.com

Knowledge Centre
Tel: +44 20 8996 7004
Email: knowledgecentre@bsigroup.com

Copyright & Licensing
Tel: +44 20 8996 7070
Email: copyright@bsigroup.com

BSI Group Headquarters

389 Chiswick High Road London W4 4AL UK

bsi.

...making excellence a habit.™