BS EN 62305-1:2011

Incorporating corrigendum November 2016

BSI Standards Publication

Protection against lightning

Part 1: General principles

(IEC 62305-1:2010)

bsi.

EUROPEAN STANDARD

NORME EUROPÉENNE

EUROPÄISCHE NORM

EN 62305-1

February 2011

ICS 29.020; 91.120.40

Supersedes EN 62305-1:2006 + corr. Nov.2006

English version

Protection against lightning - Part 1: General principles

(IEC 62305-1:2010)

Protection contre la foudre -
Partie 1: Principes généraux
(CEI 62305-1:2010)

Blitzschutz -
Teil 1: Allgemeine Grundsätze
(IEC 62305-1:2010)

This European Standard was approved by CENELEC on 2011-01-13. CENELEC members are bound to comply with the CEN/CENELEC Internal Regulations which stipulate the conditions for giving this European Standard the status of a national standard without any alteration.

Up-to-date lists and bibliographical references concerning such national standards may be obtained on application to the Central Secretariat or to any CENELEC member.

This European Standard exists in three official versions (English, French, German). A version in any other language made by translation under the responsibility of a CENELEC member into its own language and notified to the Central Secretariat has the same status as the official versions.

CENELEC members are the national electrotechnical committees of Austria, Belgium, Bulgaria, Croatia, Cyprus, the Czech Republic, Denmark, Estonia, Finland, France, Germany, Greece, Hungary, Iceland, Ireland, Italy, Latvia, Lithuania, Luxembourg, Malta, the Netherlands, Norway, Poland, Portugal, Romania, Slovakia, Slovenia, Spain, Sweden, Switzerland and the United Kingdom.

CENELEC

European Committee for Electrotechnical Standardization
Comité Européen de Normalisation Electrotechnique
Europäisches Komitee für Elektrotechnische Normung

Management Centre: Avenue Marnix 17, B - 1000 Brussels

© 2011 CENELEC - All rights of exploitation in any form and by any means reserved worldwide for CENELEC members.

Ref. No. EN 62305-1:2011 E

Foreword

The text of document 81/370/FDIS, future edition 2 of IEC 62305-1, prepared by IEC TC 81, Lightning protection, was submitted to the IEC-CENELEC parallel vote and was approved by CENELEC as EN 62305-1 on 2011-01-13.

This European Standard supersedes EN 62305-1:2006 + corr. Nov.2006.

This EN 62305-1:2011 includes the following significant technical changes with respect to EN 62305-1:2006 + corr. Nov.2006:

1) It no longer covers protection of services connected to structures.

2) Isolated interfaces are introduced as protection measures to reduce failure of electric and electronic systems.

3) First negative impulse current is introduced as a new lightning parameter for calculation purposes.

4) Expected surge overcurrents due to lightning flashes have been more accurately specified for low voltage power systems and for telecommunication systems.

Attention is drawn to the possibility that some of the elements of this document may be the subject of patent rights. CEN and CENELEC shall not be held responsible for identifying any or all such patent rights.

The following dates were fixed:

– latest date by which the EN has to be implemented at national level by publication of an identical national standard or by endorsement	(dop)	2011-10-13
– latest date by which the national standards conflicting with the EN have to be withdrawn	(dow)	2014-01-13

Annex ZA has been added by CENELEC.

Endorsement notice

The text of the International Standard IEC 62305-1:2010 was approved by CENELEC as a European Standard without any modification.

In the official version, for Bibliography, the following notes have to be added for the standards indicated:

[1] IEC 60664-1:2007	NOTE	Harmonized as EN 60664-1:2007 (not modified).
[2] IEC 61000-4-5	NOTE	Harmonized as EN 61000-4-5.
[7] IEC 61643-1	NOTE	Harmonized as EN 61643-11.
[8] IEC 61643-21	NOTE	Harmonized as EN 61643-21.

Annex ZA
(normative)

Normative references to international publications with their corresponding European publications

The following referenced documents are indispensable for the application of this document. For dated references, only the edition cited applies. For undated references, the latest edition of the referenced document (including any amendments) applies.

NOTE When an international publication has been modified by common modifications, indicated by (mod), the relevant EN/HD applies.

Publication	Year	Title	EN/HD	Year
IEC 62305-2	2010	Protection against lightning - Part 2: Risk management	EN 62305-2	2011
IEC 62305-3	2010	Protection against lightning - Part 3: Physical damage to structures and life hazard	EN 62305-3	2011
IEC 62305-4	2010	Protection against lightning - Part 4: Electrical and electronic systems within structures	EN 62305-4	2011

CONTENTS

FOREWORD 5
INTRODUCTION 7
1 Scope 8
2 Normative references 8
3 Terms and definitions 8
4 Lightning current parameters 14
5 Damage due to lightning 14
5.1 Damage to a structure 14
5.1.1 Effects of lightning on a structure 14
5.1.2 Sources and types of damage to a structure 16
5.2 Types of loss 16
6 Need and economic justification for lightning protection 18
6.1 Need for lightning protection 18
6.2 Economic justification of lightning protection 19
7 Protection measures 19
7.1 General 19
7.2 Protection measures to reduce injury of living beings by electric shock 19
7.3 Protection measures to reduce physical damage 20
7.4 Protection measures to reduce failure of electrical and electronic systems 20
7.5 Protection measures selection 20
8 Basic criteria for protection of structures 21
8.1 General 21
8.2 Lightning protection levels (LPL) 21
8.3 Lightning protection zones (LPZ) 23
8.4 Protection of structures 25
8.4.1 Protection to reduce physical damage and life hazard 25
8.4.2 Protection to reduce the failure of internal systems 26
Annex A (informative) Parameters of lightning current 27
Annex B (informative) Time functions of the lightning current for analysis purposes 38
Annex C (informative) Simulation of the lightning current for test purposes 44
Annex D (informative) Test parameters simulating the effects of lightning on LPS components 48
Annex E (informative) Surges due to lightning at different installation points 62
Bibliography 67

Figure 1 – Connection between the various parts of IEC 62305 7
Figure 2 – Types of loss and corresponding risks resulting from different types of damage 18
Figure 3 – LPZ defined by an LPS (IEC 62305-3) 24
Figure 4 – LPZ defined by an SPM (IEC 62305-4) 25
Figure A.1 – Definitions of impulse current parameters (typically $T_2 < 2$ ms) 27
Figure A.2 – Definitions of long duration stroke parameters (typically 2 ms $< T_{LONG} <$ 1 s) 28

Figure A.3 – Possible components of downward flashes (typical in flat territory and to lower structures) 28
Figure A.4 – Possible components of upward flashes (typical to exposed and/or higher structures) 29
Figure A.5 – Cumulative frequency distribution of lightning current parameters (lines through 95 % and 5 % value) 34
Figure B.1 – Shape of the current rise of the first positive impulse 39
Figure B.2 – Shape of the current tail of the first positive impulse 40
Figure B.3 – Shape of the current rise of the first negative impulse 40
Figure B.4 – Shape of the current tail of the first negative impulse 41
Figure B.5 – Shape of the current rise of the subsequent negative impulses 42
Figure B.6 – Shape of the current tail of the subsequent negative impulses 42
Figure B.7 – Amplitude density of the lightning current according to LPL I 43
Figure C.1 – Example test generator for the simulation of the specific energy of the first positive impulse and the charge of the long stroke 45
Figure C.2 – Definition of the current steepness in accordance with Table C.3 46
Figure C.3 – Example test generator for the simulation of the front steepness of the first positive impulse for large test items 47
Figure C.4 – Example test generator for the simulation of the front steepness of the subsequent negative impulses for large test items 47
Figure D.1 – General arrangement of two conductors for the calculation of electrodynamic force 54
Figure D.2 – Typical conductor arrangement in an LPS 55
Figure D.3 – Diagram of the stresses *F* for the configuration of Figure D.2 55
Figure D.4 – Force per unit length *F'* along the horizontal conductor of Figure D.2 56

Table 1 – Effects of lightning on typical structures 15
Table 2 – Damage and loss relevant to a structure according to different points of strike of lightning 17
Table 3 – Maximum values of lightning parameters according to LPL 22
Table 4 – Minimum values of lightning parameters and related rolling sphere radius corresponding to LPL 22
Table 5 – Probabilities for the limits of the lightning current parameters 23
Table A.1 – Tabulated values of lightning current parameters taken from CIGRE (Electra No. 41 or No. 69) [3], [4] 31
Table A.2 – Logarithmic normal distribution of lightning current parameters – Mean μ and dispersion σ_{log} calculated from 95 % and 5 % values from CIGRE (Electra No. 41 or No. 69) [3], [4] 32
Table A.3 – Values of probability *P* as function of the lightning current *I* 33
Table B.1 – Parameters for Equation (B.1) 38
Table C.1 – Test parameters of the first positive impulse 45
Table C.2 – Test parameters of the long stroke 45
Table C.3 – Test parameters of the impulses 46
Table D.1 – Summary of the lightning threat parameters to be considered in the calculation of the test values for the different LPS components and for the different LPL49
Table D.2 – Physical characteristics of typical materials used in LPS components 52

Table D.3 – Temperature rise for conductors of different sections as a function of *W/R* 52

Table E.1 – Conventional earthing impedance values Z and Z_1 according to the resistivity of the soil 63

Table E.2 – Expected surge overcurrents due to lightning flashes on low-voltage systems 64

Table E.3 – Expected surge overcurrents due to lightning flashes on telecommunication systems 65

INTERNATIONAL ELECTROTECHNICAL COMMISSION

PROTECTION AGAINST LIGHTNING –

Part 1: General principles

FOREWORD

1) The International Electrotechnical Commission (IEC) is a worldwide organization for standardization comprising all national electrotechnical committees (IEC National Committees). The object of IEC is to promote international co-operation on all questions concerning standardization in the electrical and electronic fields. To this end and in addition to other activities, IEC publishes International Standards, Technical Specifications, Technical Reports, Publicly Available Specifications (PAS) and Guides (hereafter referred to as "IEC Publication(s)"). Their preparation is entrusted to technical committees; any IEC National Committee interested in the subject dealt with may participate in this preparatory work. International, governmental and non-governmental organizations liaising with the IEC also participate in this preparation. IEC collaborates closely with the International Organization for Standardization (ISO) in accordance with conditions determined by agreement between the two organizations.
2) The formal decisions or agreements of IEC on technical matters express, as nearly as possible, an international consensus of opinion on the relevant subjects since each technical committee has representation from all interested IEC National Committees.
3) IEC Publications have the form of recommendations for international use and are accepted by IEC National Committees in that sense. While all reasonable efforts are made to ensure that the technical content of IEC Publications is accurate, IEC cannot be held responsible for the way in which they are used or for any misinterpretation by any end user.
4) In order to promote international uniformity, IEC National Committees undertake to apply IEC Publications transparently to the maximum extent possible in their national and regional publications. Any divergence between any IEC Publication and the corresponding national or regional publication shall be clearly indicated in the latter.
5) IEC itself does not provide any attestation of conformity. Independent certification bodies provide conformity assessment services and, in some areas, access to IEC marks of conformity. IEC is not responsible for any services carried out by independent certification bodies.
6) All users should ensure that they have the latest edition of this publication.
7) No liability shall attach to IEC or its directors, employees, servants or agents including individual experts and members of its technical committees and IEC National Committees for any personal injury, property damage or other damage of any nature whatsoever, whether direct or indirect, or for costs (including legal fees) and expenses arising out of the publication, use of, or reliance upon, this IEC Publication or any other IEC Publications.
8) Attention is drawn to the Normative references cited in this publication. Use of the referenced publications is indispensable for the correct application of this publication.
9) Attention is drawn to the possibility that some of the elements of this IEC Publication may be the subject of patent rights. IEC shall not be held responsible for identifying any or all such patent rights.

International Standard IEC 62305-1 has been prepared by IEC technical committee 81: Lightning protection.

This second edition cancels and replaces the first edition, published in 2006, and constitutes a technical revision.

This edition includes the following significant technical changes with respect to the previous edition:

1) It no longer covers protection of services connected to structures.
2) Isolated interfaces are introduced as protection measures to reduce failure of electric and electronic systems.
3) First negative impulse current is introduced as a new lightning parameter for calculation purposes.
4) Expected surge overcurrents due to lightning flashes have been more accurately specified for low voltage power systems and for telecommunication systems.

The text of this standard is based on the following documents:

FDIS	Report on voting
81/370/FDIS	81/380/RVD

Full information on the voting for the approval of this standard can be found in the report on voting indicated in the above table.

This publication has been drafted in accordance with the ISO/IEC Directives, Part 2.

A list of all the parts in the IEC 62305 series, under the general title *Protection against lightning*, can be found on the IEC website.

The committee has decided that the contents of this publication will remain unchanged until the stability date indicated on the IEC web site under "http://webstore.iec.ch" in the data related to the specific publication. At this date, the publication will be

- reconfirmed,
- withdrawn,
- replaced by a revised edition, or
- amended.

A bilingual version of this standard may be issued at a later date.

INTRODUCTION

There are no devices or methods capable of modifying the natural weather phenomena to the extent that they can prevent lightning discharges. Lightning flashes to, or nearby, structures (or lines connected to the structures) are hazardous to people, to the structures themselves, their contents and installations as well as to lines. This is why the application of lightning protection measures is essential.

The need for protection, the economic benefits of installing protection measures and the selection of adequate protection measures should be determined in terms of risk management. Risk management is the subject of IEC 62305-2.

Protection measures considered in IEC 62305 are proved to be effective in risk reduction.

All measures for protection against lightning form the overall lightning protection. For practical reasons the criteria for design, installation and maintenance of lightning protection measures are considered in two separate groups:

– the first group concerning protection measures to reduce physical damage and life hazard in a structure is given in IEC 62305-3;
– the second group concerning protection measures to reduce failures of electrical and electronic systems in a structure is given in IEC 62305-4.

The connection between the parts of IEC 62305 is illustrated in Figure 1.

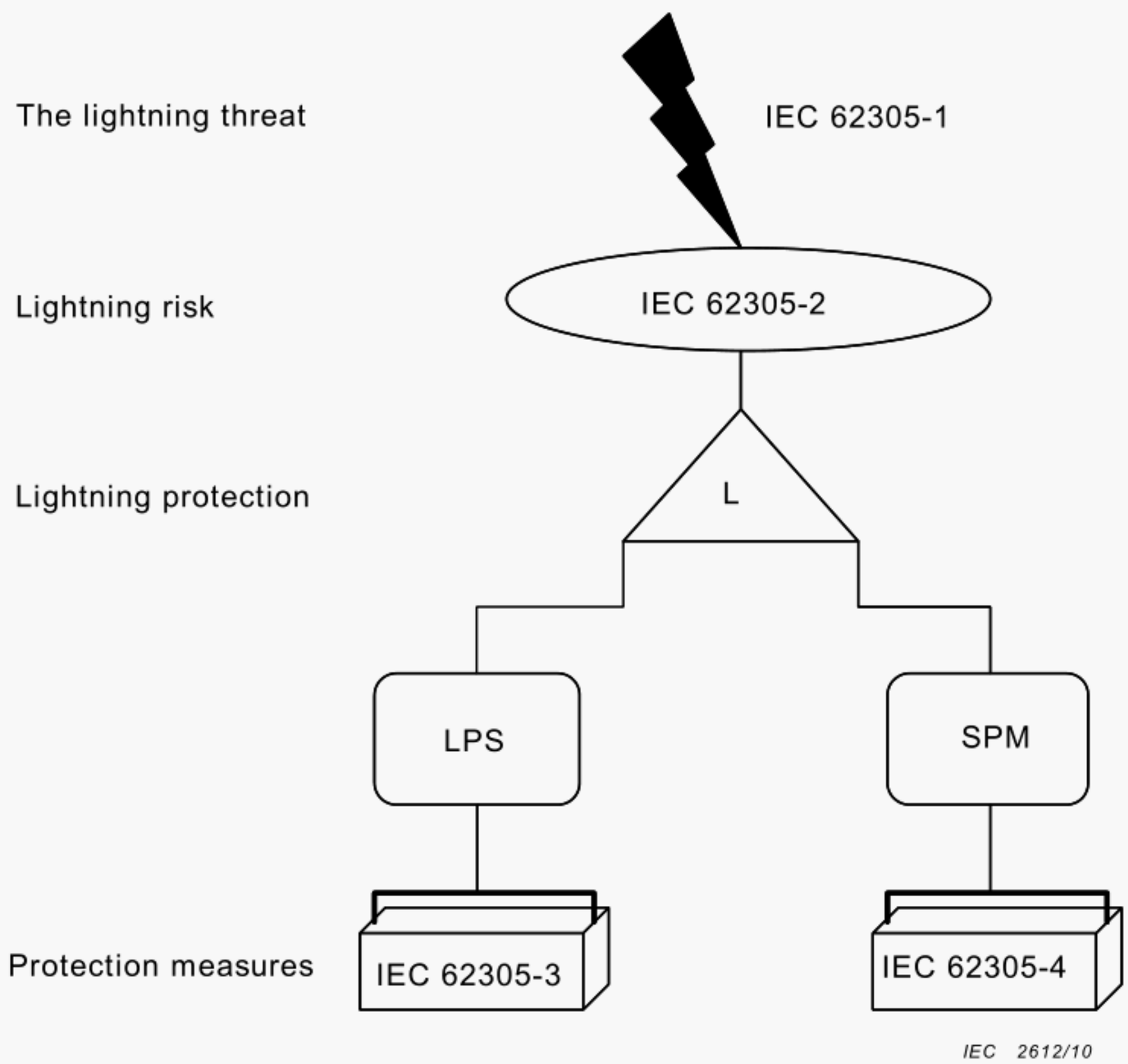

Figure 1 – Connection between the various parts of IEC 62305

PROTECTION AGAINST LIGHTNING –

Part 1: General principles

1 Scope

This part of IEC 62305 provides general principles to be followed for protection of structures against lightning, including their installations and contents, as well as persons.

The following cases are outside the scope of this standard:

– railway systems;
– vehicles, ships, aircraft, offshore installations;
– underground high pressure pipelines;
– pipe, power and telecommunication lines placed outside the structure.

NOTE These systems usually fall under special regulations produced by various specialized authorities.

2 Normative references

The following referenced documents are indispensable for the application of this document. For dated references, only the edition cited applies. For undated references, the latest edition of the referenced document (including any amendments) applies.

IEC 62305-2:2010, *Protection against lightning – Part 2: Risk management*

IEC 62305-3:2010, *Protection against lightning – Part 3: Physical damage to structures and life hazard*

IEC 62305-4:2010, *Protection against lightning – Part 4: Electrical and electronic systems within structures*

3 Terms and definitions

For the purposes of this document, the following terms and definitions apply.

3.1
lightning flash to earth
electrical discharge of atmospheric origin between cloud and earth consisting of one or more strokes

3.2
downward flash
lightning flash initiated by a downward leader from cloud to earth

NOTE A downward flash consists of a first impulse, which can be followed by subsequent impulses. One or more impulses may be followed by a long stroke.

3.3
upward flash
lightning flash initiated by an upward leader from an earthed structure to cloud

NOTE An upward flash consists of a first long stroke with or without multiple superimposed impulses. One or more impulses may be followed by a long stroke.

3.4
lightning stroke
single electrical discharge in a lightning flash to earth

3.5
short stroke
part of the lightning flash which corresponds to an impulse current

NOTE This current has a time T_2 to the half peak value on the tail typically less than 2 ms (see Figure A.1).

3.6
long stroke
part of the lightning flash which corresponds to a continuing current

NOTE The duration time T_{LONG} (time from the 10 % value on the front to the 10 % value on the tail) of this continuing current is typically more than 2 ms and less than 1 s (see Figure A.2).

3.7
multiple strokes
lightning flash consisting on average of 3-4 strokes, with typical time interval between them of about 50 ms

NOTE Events having up to a few dozen strokes with intervals between them ranging from 10 ms to 250 ms have been reported.

3.8
point of strike
point where a lightning flash strikes the earth, or protruding structure (e.g. structure, LPS, line, tree, etc.)

NOTE A lightning flash may have more than one point of strike.

3.9
lightning current
i
current flowing at the point of strike

3.10
current peak value
I
maximum value of the lightning current

3.11
average steepness of the front of impulse current
average rate of change of current within a time interval $\Delta t = t_2 - t_1$

NOTE It is expressed by the difference $\Delta i = i(t_2) - i(t_1)$ of the values of the current at the start and at the end of this interval, divided by the time interval $\Delta t = t_2 - t_1$ (see Figure A.1).

3.12
front time of impulse current
T_1
virtual parameter defined as 1,25 times the time interval between the instants when the 10 % and 90 % of the peak value are reached (see Figure A.1)

3.13
virtual origin of impulse current
O_1
point of intersection with time axis of a straight line drawn through the 10 % and the 90 % reference points on the stroke current front (see Figure A.1); it precedes by 0,1 T_1 that instant at which the current attains 10 % of its peak value

3.14
time to half value on the tail of impulse current
T_2
virtual parameter defined as the time interval between the virtual origin O_1 and the instant at which the current has decreased to half the peak value on the tail (see Figure A.1)

3.15
flash duration
T
time for which the lightning current flows at the point of strike

3.16
duration of long stroke current
T_{LONG}
time duration during which the current in a long stroke is between 10 % of the peak value during the increase of the continuing current and 10 % of the peak value during the decrease of the continuing current (see Figure A.2)

3.17
flash charge
Q_{FLASH}
value resulting from the time integral of the lightning current for the entire lightning flash duration

3.18
impulse charge
Q_{SHORT}
value resulting from the time integral of the lightning current in an impulse

3.19
long stroke charge
Q_{LONG}
value resulting from the time integral of the lightning current in a long stroke

3.20
specific energy
W/R
value resulting from the time integral of the square of the lightning current for the entire flash duration

NOTE It represents the energy dissipated by the lightning current in a unit resistance.

3.21
specific energy of impulse current
value resulting from the time integral of the square of the lightning current for the duration of the impulse

NOTE The specific energy in a long stroke current is negligible.

3.22
structure to be protected
structure for which protection is required against the effects of lightning in accordance with this standard

NOTE A structure to be protected may be part of a larger structure.

3.23
line
power line or telecommunication line connected to the structure to be protected

3.24
telecommunication lines
lines intended for communication between equipment that may be located in separate structures, such as a phone line and a data line

3.25
power lines
distribution lines feeding electrical energy into a structure to power electrical and electronic equipment located there, such as low voltage (LV) or high voltage (HV) electric mains

3.26
lightning flash to a structure
lightning flash striking a structure to be protected

3.27
lightning flash near a structure
lightning flash striking close enough to a structure to be protected that it may cause dangerous overvoltages

3.28
electrical system
system incorporating low voltage power supply components

3.29
electronic system
system incorporating sensitive electronic components such as telecommunication equipment, computer, control and instrumentation systems, radio systems, power electronic installations

3.30
internal systems
electrical and electronic systems within a structure

3.31
physical damage
damage to a structure (or to its contents) due to mechanical, thermal, chemical and explosive effects of lightning

3.32
injury of living beings
permanent injuries, including loss of life, to people or to animals by electric shock due to touch and step voltages caused by lightning

NOTE Although living beings may be injured in other ways, in this standard the term ‘injury to living beings’ is limited to the threat due to electrical shock (type of damage D1).

3.33
failure of electrical and electronic systems
permanent damage of electrical and electronic systems due to LEMP

3.34
lightning electromagnetic impulse
LEMP
all electromagnetic effects of lightning current via resistive, inductive and capacitive coupling that create surges and radiated electromagnetic fields

3.35
surge
transient created by LEMP that appears as an overvoltage and/or an overcurrent

3.36
lightning protection zone
LPZ
zone where the lightning electromagnetic environment is defined

NOTE The zone boundaries of an LPZ are not necessarily physical boundaries (e.g. walls, floor and ceiling).

3.37
risk
R
value of probable average annual loss (humans or goods) due to lightning, relative to the total value (humans or goods) of the structure to be protected

3.38
tolerable risk
R_T
maximum value of the risk which can be tolerated for the structure to be protected

3.39
lightning protection level
LPL
number related to a set of lightning current parameters values relevant to the probability that the associated maximum and minimum design values will not be exceeded in naturally occurring lightning

NOTE Lightning protection level is used to design protection measures according to the relevant set of lightning current parameters.

3.40
protection measures
measures to be adopted for the structure to be protected in order to reduce the risk

3.41
lightning protection
LP
complete system for protection of structures against lightning, including their internal systems and contents, as well as persons, in general consisting of an LPS and SPM

3.42
lightning protection system
LPS
complete system used to reduce physical damage due to lightning flashes to a structure

NOTE It consists of both external and internal lightning protection systems.

3.43
external lightning protection system
part of the LPS consisting of an air-termination system, a down-conductor system and an earth-termination system

3.44
internal lightning protection system
part of the LPS consisting of lightning equipotential bonding and/or electrical insulation of external LPS

3.45
air-termination system
part of an external LPS using metallic elements such as rods, mesh conductors or catenary wires intended to intercept lightning flashes

3.46
down-conductor system
part of an external LPS intended to conduct lightning current from the air-termination system to the earth-termination system

3.47
earth-termination system
part of an external LPS which is intended to conduct and disperse lightning current into the earth

3.48
external conductive parts
extended metal items entering or leaving the structure to be protected such as pipe works, cable metallic elements, metal ducts, etc. which may carry a part of the lightning current

3.49
lightning equipotential bonding
EB
bonding to LPS of separated metallic parts, by direct conductive connections or via surge protective devices, to reduce potential differences caused by lightning current

3.50
conventional earthing impedance
ratio of the peak values of the earth-termination voltage and the earth-termination current which, in general, do not occur simultaneously

3.51
LEMP protection measures
SPM
measures taken to protect internal systems against the effects of LEMP

NOTE This is part of overall lightning protection.

3.52
magnetic shield
closed, metallic, grid-like or continuous screen enveloping the structure to be protected, or part of it, used to reduce failures of electrical and electronic systems

3.53
surge protective device
SPD
device intended to limit transient overvoltages and divert surge currents; contains at least one non linear component

3.54
coordinated SPD system
SPDs properly selected, coordinated and installed to form a system intended to reduce failures of electrical and electronic systems

3.55
rated impulse withstand voltage
U_W
impulse withstand voltage assigned by the manufacturer to the equipment or to a part of it, characterizing the specified withstand capability of its insulation against overvoltages

NOTE For the purposes of this standard, only withstand voltage between live conductors and earth is considered.

[IEC 60664-1:2007, definition 3.9.2][1] 1

3.56
isolating interfaces
devices which are capable of reducing conducted surges on lines entering the LPZ

NOTE 1 These include isolation transformers with earthed screen between windings, metal free fibre optic cables and opto-isolators.

NOTE 2 Insulation withstand characteristics of these devices are suitable for this application intrinsically or via SPD.

4 Lightning current parameters

The lightning current parameters used in the IEC 62305 series are given in Annex A.

The time function of the lightning current to be used for analysis purposes is given in Annex B.

Information for simulation of lightning current for test purposes is given in Annex C.

The basic parameters to be used in laboratories to simulate the effects of lightning on LPS components are given in Annex D.

Information on surges due to lightning at different installation points is given in Annex E.

5 Damage due to lightning

5.1 Damage to a structure

Lightning affecting a structure can cause damage to the structure itself and to its occupants and contents, including failure of internal systems. The damages and failures may also extend to the surroundings of the structure and even involve the local environment. The scale of this extension depends on the characteristics of the structure and on the characteristics of the lightning flash.

5.1.1 Effects of lightning on a structure

The main characteristics of structures relevant to lightning effects include:

– construction (e.g. wood, brick, concrete, reinforced concrete, steel frame construction);

---

1 References in square brackets refer to the bibliography.

- function (dwelling house, office, farm, theatre, hotel, school, hospital, museum, church, prison, department store, bank, factory, industry plant, sports area);
- occupants and contents (persons and animals, presence of combustible or non-combustible materials, explosive or non-explosive materials, electrical and electronic systems with low or high withstand voltage);
- connected lines (power lines, telecommunication lines, pipelines);
- existing or provided protection measures (protection measures to reduce physical damage and life hazard, protection measures to reduce failure of internal systems);
- scale of the extension of danger (structure with difficulty of evacuation or structure where panic may be created, structure dangerous to the surroundings, structure dangerous to the environment).

Table 1 reports the effects of lightning on various types of structures.

Table 1 – Effects of lightning on typical structures

Type of structure according to function and/or contents	**Effects of lightning**
Dwelling-house	Puncture of electrical installations, fire and material damage Damage normally limited to structures exposed to the point of strike or to the lightning current path Failure of electrical and electronic equipment and systems installed (e.g. TV sets, computers, modems, telephones, etc.)
Farm building	Primary risk of fire and hazardous step voltages as well as material damage Secondary risk due to loss of electric power, and life hazard to livestock due to failure of electronic control of ventilation and food supply systems, etc.
Theatre Hotel School Department store Sports area	Damage to the electrical installations (e.g. electric lighting) likely to cause panic Failure of fire alarms resulting in delayed fire fighting measures
Bank Insurance company Commercial company, etc.	As above, plus problems resulting from loss of communication, failure of computers and loss of data
Hospital Nursing home Prison	As above, plus problems of people in intensive care, and the difficulties of rescuing immobile people
Industry	Additional effects depending on the contents of factories, ranging from minor to unacceptable damage and loss of production
Museums and archaeological site Church	Loss of irreplaceable cultural heritage
Telecommunication Power plants	Unacceptable loss of services to the public
Firework factory Munitions works	Consequences of fire and explosion to the plant and its surroundings
Chemical plant Refinery Nuclear plant Biochemical laboratories and plants	Fire and malfunction of the plant with detrimental consequences to the local and global environment

5.1.2 Sources and types of damage to a structure

The lightning current is the source of damage. The following situations shall be taken into account, depending on the position of the point of strike relative to the structure considered:

a) S1: flashes to the structure;

b) S2: flashes near the structure;

c) S3: flashes to the lines connected to the structure;

d) S4: flashes near the lines connected to the structure.

a) Flashes to the structure can cause:

– immediate mechanical damage, fire and/or explosion due to the hot lightning plasma arc itself, due to the current resulting in ohmic heating of conductors (over-heated conductors), or due to the charge resulting in arc erosion (melted metal);

– fire and/or explosion triggered by sparks caused by overvoltages resulting from resistive and inductive coupling and to passage of part of the lightning currents;

– injury to living beings by electric shock due to step and touch voltages resulting from resistive and inductive coupling;

– failure or malfunction of internal systems due to LEMP.

b) Flashes near the structure can cause:

– failure or malfunction of internal systems due to LEMP.

c) Flashes to a line connected to the structure can cause:

– fire and/or explosion triggered by sparks due to overvoltages and lightning currents transmitted through the connected line;

– injury to living beings by electric shock due to touch voltages inside the structure caused by lightning currents transmitted through the connected line;

– failure or malfunction of internal systems due to overvoltages appearing on connected lines and transmitted to the structure.

d) Flashes near a line connected to the structure can cause:

– failure or malfunction of internal systems due to overvoltages induced on connected lines and transmitted to the structure.

NOTE 1 Malfunctioning of internal systems is not covered by the IEC 62305 series. Reference should be made to IEC 61000-4-5 [2] .

NOTE 2 Only the sparks carrying lightning current (total or partial) are regarded as able to trigger fire.

NOTE 3 Lightning flashes, direct to or near the incoming pipelines, do not cause damages to the structure, provided that they are bonded to the equipotential bar of the structure (see IEC 62305-3).

As a result, the lightning can cause three basic type of damage:

– D1: injury to living beings by electric shock;

– D2: physical damage (fire, explosion, mechanical destruction, chemical release) due to lightning current effects, including sparking;

– D3: failure of internal systems due to LEMP.

5.2 Types of loss

Each type of damage relevant to structure to be protected, alone or in combination with others, may produce different consequential loss. The type of loss that may appear depends on the characteristics of the structure itself.

For the purposes of IEC 62305, the following types of loss, which may appear as consequence of damages relevant to structure, are considered:

– L1: loss of human life (including permanent injury);
– L2: loss of service to the public;
– L3: loss of cultural heritage;
– L4: loss of economic value (structure, its content, and loss of activity).

NOTE For the purposes of IEC 62305, only utilities such as gas,water,TV, TLC and power supply are considered service to the public.

Losses of type L1, L2 and L3 may be considered as loss of social values, whereas a loss of type L4 may be considered as purely an economic loss.

The relationship between source of damage, type of damage and loss is reported in Table 2.

Table 2 – Damage and loss relevant to a structure according to different points of strike of lightning

Point of strike		Source of damage	Type of damage	Type of loss
Structure	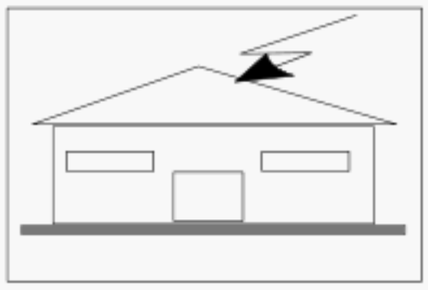	S1	D1 D2 D3	L1, L4[a] L1, L2, L3, L4 L1[b], L2, L4
Near a structure		S2	D3	L1[b], L2, L4
Line connected to the structure	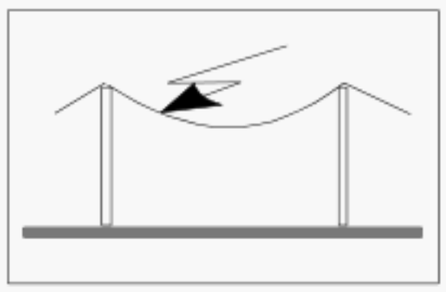	S3	D1 D2 D3	L1, L4[a] L1, L2, L3, L4 L1[b], L2, L4
Near a line	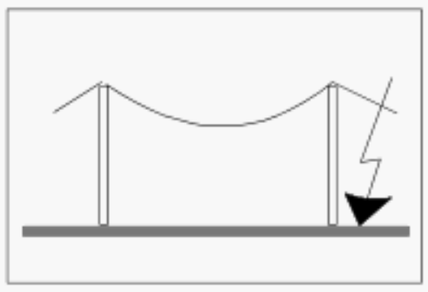	S4	D3	L1[b], L2, L4

a Only for properties where animals may be lost..

b Only for structures with risk of explosion and for hospitals or other structures where failure of internal systems immediately endangers human life.

Types of loss resulting from types of damage and the corresponding risks are reported in Figure 2.

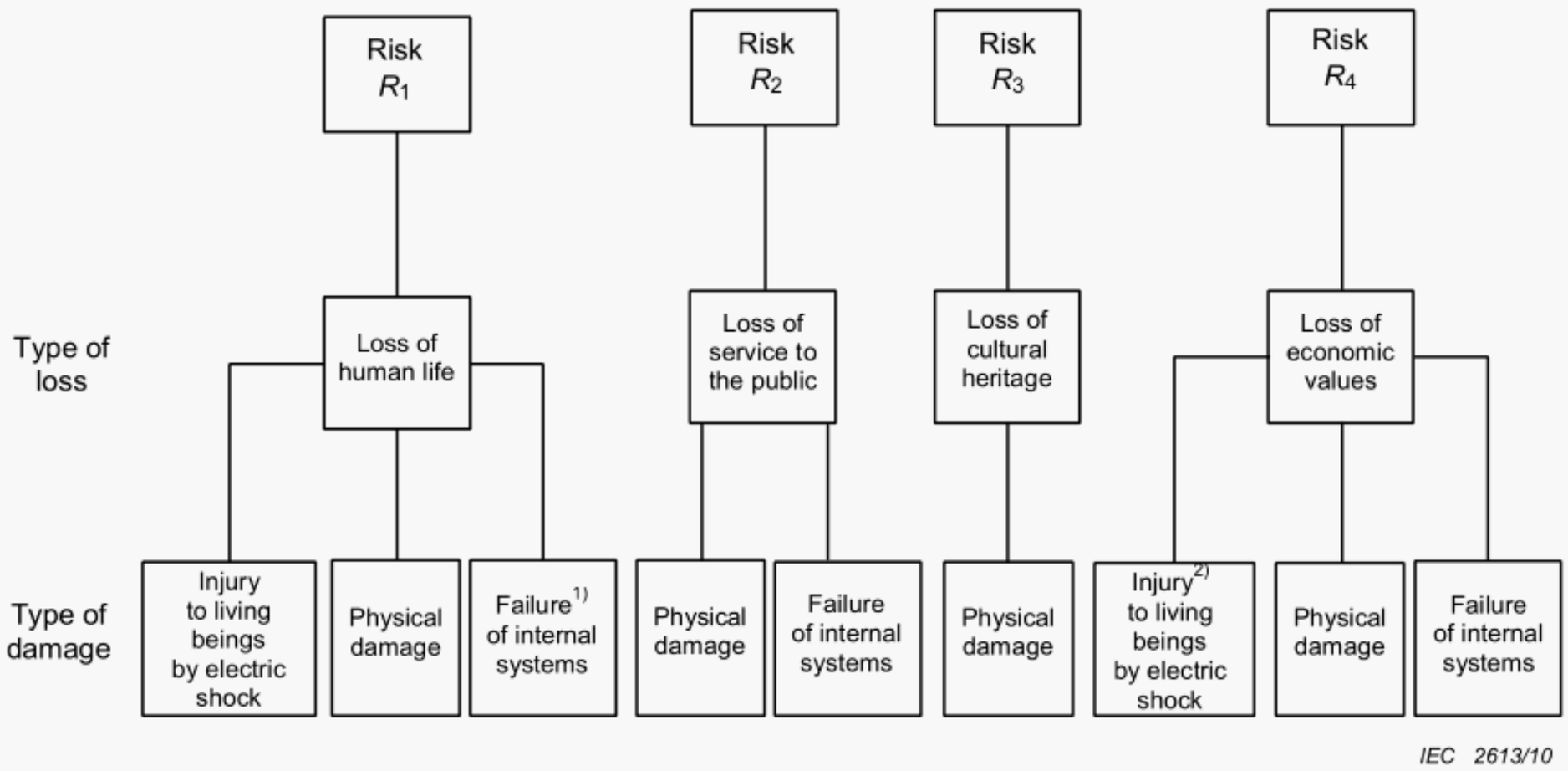

[a] Only for hospitals or other structures where failure of internal systems immediately endanger human life.

[b] Only for properties where animals may be lost.

Figure 2 – Types of loss and corresponding risks resulting from different types of damage

6 Need and economic justification for lightning protection

6.1 Need for lightning protection

The need for the lightning protection of a structure to be protected in order to reduce the loss of social values L1, L2 and L3 shall be evaluated.

In order to evaluate whether or not lightning protection of a structure is needed, a risk assessment in accordance with the procedures contained in IEC 62305-2 shall be made. The following risks shall be taken into account, corresponding to the types of loss reported in 5.2:

– R_1: risk of loss or permanent injury of human life;
– R_2: risk of loss of services to the public;
– R_3: risk of loss of cultural heritage.

NOTE 1 Risk R_4: risk of loss of economic values, should be assessed whenever the economic justification of lightning protection is considered (see 6.2).

Protection against lightning is needed if the risk R (R_1 to R_3) is higher than the tolerable level R_T

$$R > R_T$$

In this case, protection measures shall be adopted in order reduce the risk R (R_1 to R_3) to the tolerable level R_T

$$R \leq R_T$$

If more than one type of loss could appear, the condition $R \leq R_T$ shall be satisfied for each type of loss (L1, L2 and L3).

The values of tolerable risk R_T where lightning could result in the loss of items of social value should be under the responsibility of a competent national body.

NOTE 2 An authority having jurisdiction may specify the need for lightning protection for specific applications without requiring a risk assessment. In these cases, the required lightning protection level will be specified by the authority having jurisdiction. In some cases, a risk assessment may be performed as a technique by which to justify a waiver to these requirements.

NOTE 3 Detailed information on risk assessment and on the procedure for selection of protection measures is reported in IEC 62305-2.

6.2 Economic justification of lightning protection

Besides the need for lightning protection for the structure to be protected, it may be useful to evaluate the economic benefits of providing protection measures in order to reduce the economic loss L4.

In this case, the risk R_4 of loss of economic values should be assessed. The assessment of risk R_4 allows for the evaluation of the cost of the economic loss with and without the adopted protection measures.

Lightning protection is cost effective if the sum of the cost C_{RL} of residual loss in the presence of protection measures and the cost C_{PM} of protection measures is lower than the cost C_L of total loss without protection measures:

$$C_{RL} + C_{PM} < C_L$$

NOTE Detailed information on the evaluation of economic justification of lightning protection is reported in IEC 62305-2.

7 Protection measures

7.1 General

Protection measures may be adopted in order to reduce the risk according to the type of damage.

7.2 Protection measures to reduce injury of living beings by electric shock

Possible protection measures include:

– adequate insulation of exposed conductive parts;
– equipotentialization by means of a meshed earthing system;
– physical restrictions and warning notices;
– lightning equipotential bonding (EB).

NOTE 1 Equipotentialization and an increase of the contact resistance of the ground surface inside and outside the structure may reduce the life hazard (see Clause 8 of IEC 62305-3:2010).

NOTE 2 Protection measures are effective only in structures protected by an LPS.

NOTE 3 The use of storm detectors and the associated provision taken may reduce the life hazard.

7.3 Protection measures to reduce physical damage

Protection is achieved by the lightning protection system (LPS) which includes the following features:

– air-termination system;
– down-conductor system;
– earth-termination system;
– lightning equipotential bonding (EB);
– electrical insulation (and hence separation distance) against the external LPS.

NOTE 1 When an LPS is installed, equipotentialization is a very important measure to reduce fire and explosion danger and life hazard. For more details see IEC 62305-3.

NOTE 2 Provisions limiting the development and propagation of the fire such as fireproof compartments, extinguishers, hydrants, fire alarms and fire extinguishing installations may reduce physical damage.

NOTE 3 Protected escape routes provide protection for personnel.

7.4 Protection measures to reduce failure of electrical and electronic systems

Possible protection measures (SPM) include

- earthing and bonding measures,
- magnetic shielding,
- line routing,
- isolating interfaces,
- coordinated SPD system.

These measures may be used alone or in combination.

NOTE 1 When source of damage S1 is considered, protection measures are effective only in structures protected by an LPS.

NOTE 2 The use of storm detectors and the associated provision taken may reduce failures of electrical and electronic systems.

7.5 Protection measures selection

The protection measures listed in 7.2, 7.3 and 7.4 together form the overall lightning protection.

Selection of the most suitable protection measures shall be made by the designer of the protection measures and the owner of the structure to be protected according to the type and the amount of each kind of damage, the technical and economic aspects of the different protection measures and the results of risk assessment.

The criteria for risk assessment and for selection of the most suitable protection measures are given in IEC 62305-2.

Protection measures are effective provided that they comply with the requirements of relevant standards and are able to withstand the stress expected in the place of their installation.

8 Basic criteria for protection of structures

8.1 General

An ideal protection for structures would be to enclose the structure to be protected within an earthed and perfectly conducting continuous shield of adequate thickness, and to provide adequate bonding, at the entrance point into the shield, of the lines connected to the structure.

This would prevent the penetration of lightning current and related electromagnetic field into the structure to be protected and prevent dangerous thermal and electrodynamic effects of current, as well as dangerous sparkings and overvoltages for internal systems.

In practice, it is often neither possible nor cost effective to go to such measures to provide such full protection.

Lack of continuity of the shield and/or its inadequate thickness allows the lightning current to penetrate the shield causing:

– physical damage and life hazard;
– failure of internal systems.

Protection measures, adopted to reduce such damages and relevant consequential loss, shall be designed for the defined set of lightning current parameters against which protection is required (lightning protection level).

8.2 Lightning protection levels (LPL)

For the purposes of IEC 62305, four lightning protection levels (I to IV) are introduced. For each LPL, a set of maximum and minimum lightning current parameters is fixed.

NOTE 1 Protection against lightning whose maximum and minimum lightning current parameters exceed those relevant to LPL I needs more efficient measures which should be selected and erected on an individual basis.

NOTE 2 The probability of occurrence of lightning with minimum or maximum current parameters outside the range of values defined for LPL I is less than 2 %.

The maximum values of lightning current parameters relevant to LPL I shall not be exceeded, with a probability of 99 %. According to the polarity ratio assumed (see Clause A.2), values taken from positive flashes will have probabilities below 10 %, while those from negative flashes will remain below 1 % (see Clause A.3).

The maximum values of lightning current parameters relevant to LPL I are reduced to 75 % for LPL II and to 50 % for LPL III and IV (linear for I, Q and di/dt, but quadratic for W/R). The time parameters are unchanged.

NOTE 3 Lightning protection levels whose maximum lightning current parameters are lower than those relevant to LPL IV allow one to consider values of probability of damage higher than those presented in Annex B of IEC 62305-2:2010, but not quantified and are useful for better tailoring of protection measures in order to avoid unjustified costs.

The maximum values of lightning current parameters for the different lightning protection levels are given in Table 3 and are used to design lightning protection components (e.g. cross-section of conductors, thickness of metal sheets, current capability of SPDs, separation distance against dangerous sparking) and to define test parameters simulating the effects of lightning on such components (see Annex D).

The minimum values of lightning current amplitude for the different LPL are used to derive the rolling sphere radius (see Clause A.4) in order to define the lightning protection zone LPZ 0_B which cannot be reached by direct strike (see 8.3 and Figures 3 and 4). The

minimum values of lightning current parameters together with the related rolling sphere radius are given in Table 4. They are used for positioning of the air-termination system and to define the lightning protection zone LPZ 0_B (see 8.3).

Table 3 – Maximum values of lightning parameters according to LPL

First positive impulse			**LPL**			
Current parameters	**Symbol**	**Unit**	**I**	**II**	**III**	**IV**
Peak current	I	kA	200	150	100	
Impulse charge	Q_{SHORT}	C	100	75	50	
Specific energy	W/R	MJ/Ω	10	5,6	2,5	
Time parameters	T_1 / T_2	µs / µs	10 / 350			
First negative impulse[a]			**LPL**			
Current parameters	**Symbol**	**Unit**	**I**	**II**	**III**	
Peak current	I	kA	100	75	50	
Average steepness	di/dt	kA/µs	100	75	50	
Time parameters	T_1 / T_2	µs / µs	1 / 200			
Subsequent impulse			**LPL**			
Current parameters	**Symbol**	**Unit**	**I**	**II**	**III**	**IV**
Peak current	I	kA	50	37,5	25	
Average steepness	di/dt	kA/µs	200	150	100	
Time parameters	T_1 / T_2	µs / µs	0,25 / 100			
Long stroke			**LPL**			
Current parameters	**Symbol**	**Unit**	**I**	**II**	**III**	**IV**
Long stroke charge	Q_{LONG}	C	200	150	100	
Time parameter	T_{LONG}	s	0,5			
Flash			**LPL**			
Current parameters	**Symbol**	**Unit**	**I**	**II**	**III**	**IV**
Flash charge	Q_{FLASH}	C	300	225	150	

[a] The use of this current shape concerns only calculations and not testing.

Table 4 – Minimum values of lightning parameters and related rolling sphere radius corresponding to LPL

Interception criteria			**LPL**			
	Symbol	**Unit**	**I**	**II**	**III**	**IV**
Minimum peak current	I	kA	3	5	10	16
Rolling sphere radius	r	m	20	30	45	60

From the statistical distributions given in Figure A.5, a weighted probability can be determined that the lightning current parameters are smaller than the maximum values and respectively greater than the minimum values defined for each protection level (see Table 5).

Table 5 – Probabilities for the limits of the lightning current parameters

Probability that lightning current parameters	LPL			
	I	II	III	IV
– are smaller than the maximum values defined in Table 3	0,99	0,98	0,95	0,95
– are greater than the minimum values defined in Table 4	0,99	0,97	0,91	0,84

The protection measures specified in IEC 62305-3 and IEC 62305-4 are effective against lightning whose current parameters are in the range defined by the LPL assumed for design. Therefore the efficiency of a protection measure is assumed equal to the probability with which lightning current parameters are inside such range. For parameters exceeding this range, a residual risk of damage remains.

8.3 Lightning protection zones (LPZ)

Protection measures such as LPS, shielding wires, magnetic shields and SPD determine lightning protection zones (LPZ).

LPZ downstream of the protection measure are characterized by significant reduction of LEMP than that upstream of the LPZ.

With respect to the threat of lightning, the following LPZs are defined (see Figures 3 and 4):

LPZ 0_A zone where the threat is due to the direct lightning flash and the full lightning electromagnetic field. The internal systems may be subjected to full or partial lightning surge current;

LPZ 0_B zone protected against direct lightning flashes but where the threat is the full lightning electromagnetic field. The internal systems may be subjected to partial lightning surge currents;

LPZ 1 zone where the surge current is limited by current sharing and by isolating interfaces and/or SPDs at the boundary. Spatial shielding may attenuate the lightning electromagnetic field;

LPZ 2, ..., n zone where the surge current may be further limited by current sharing and by isolating interfaces and/or additional SPDs at the boundary. Additional spatial shielding may be used to further attenuate the lightning electromagnetic field.

NOTE 1 In general, the higher the number of an individual zone, the lower the electromagnetic environment parameters.

As a general rule for protection, the structure to be protected shall be in an LPZ whose electromagnetic characteristics are compatible with the capability of the structure to withstand stress causing the damage to be reduced (physical damage, failure of electrical and electronic systems due to overvoltages).

NOTE 2 For most electrical and electronic systems and apparatus, information about withstand level can be supplied by manufacturer.

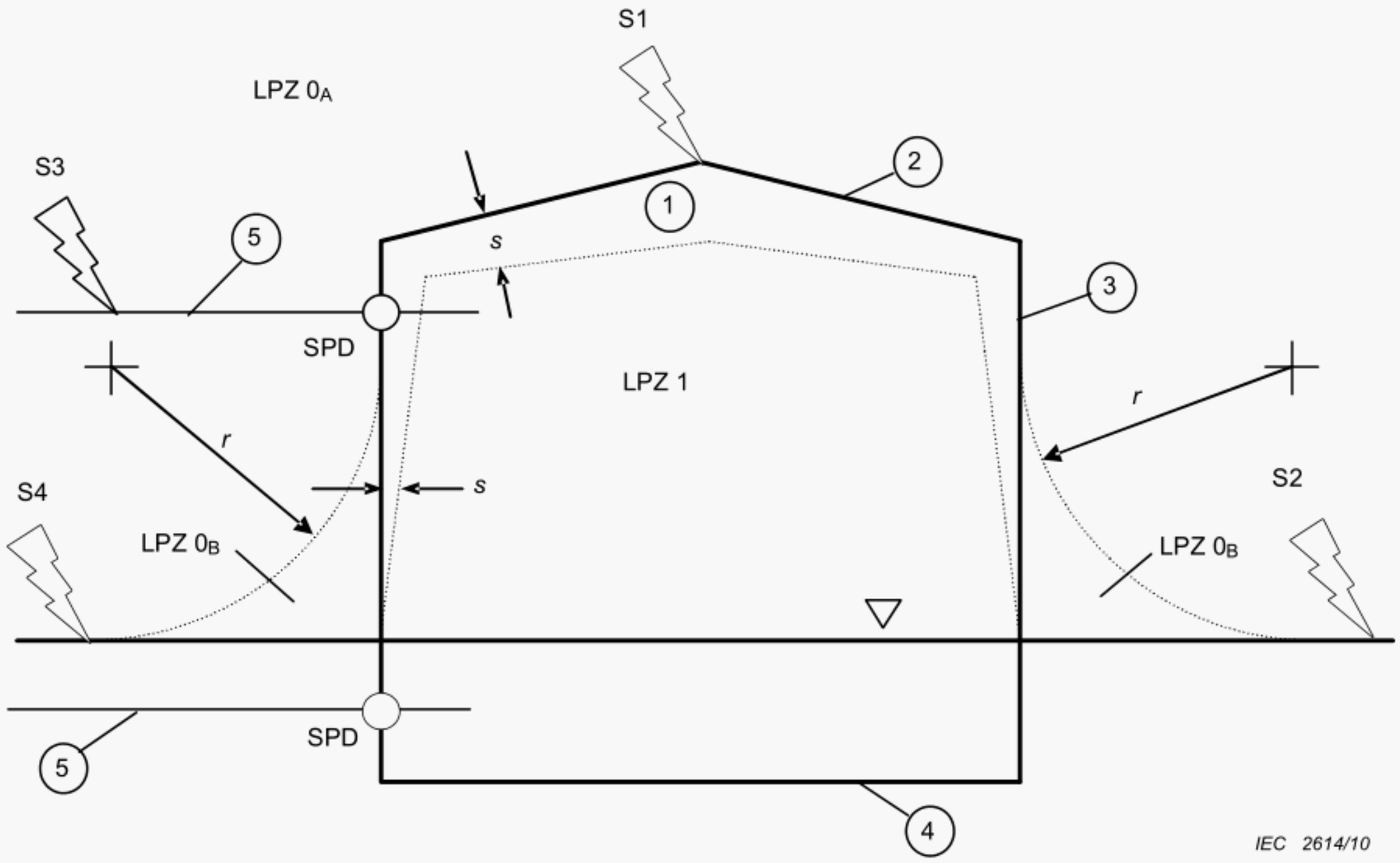

Key

1	structure	S1	flash to the structure
2	air-termination system	S2	flash near to the structure
3	down-conductor system	S3	flash to a line connected to the structure
4	earth-termination system	S4	flash near a line connected to the structure
5	incoming lines	*r*	rolling sphere radius
		s	separation distance against dangerous sparking

▽ ground level

◯ lightning equipotential bonding by means of SPD

LPZ 0_A	direct flash, full lightning current
LPZ 0_B	no direct flash, partial lightning or induced current
LPZ 1	no direct flash, limited lightning or induced current
	protected volume inside LPZ 1 must respect separation distance *s*

Figure 3 – LPZ defined by an LPS (IEC 62305-3)

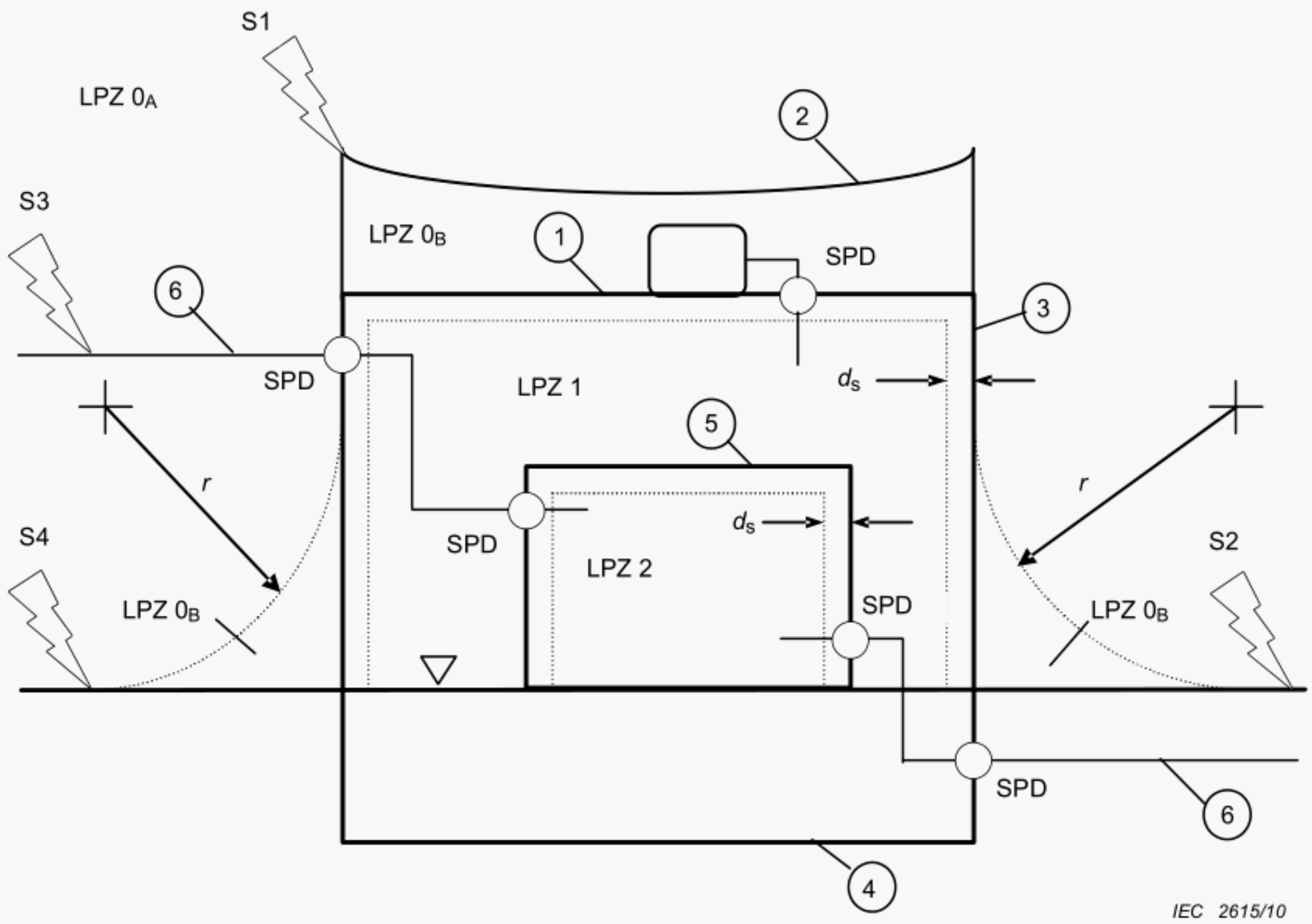

Key

1	structure (shield of LPZ 1)	S1	flash to the structure
2	air-termination system	S2	flash near to the structure
3	down-conductor system	S3	flash to a line connected to the structure
4	earth-termination system	S4	flash near a line connected to the structure
5	room (shield of LPZ 2)	r	rolling sphere radius
6	lines connected to the structure	d_S	safety distance against too high magnetic field

▽ ground level

○ lightning equipotential bonding by means of SPD

LPZ 0_A direct flash, full lightning current, full magnetic field

LPZ 0_B no direct flash, partial lightning or induced current, full magnetic field

LPZ 1 no direct flash, limited lightning or induced current, damped magnetic field

LPZ 2 no direct flash, induced currents, further damped magnetic field

protected volumes inside LPZ 1 and LPZ 2 must respect safety distances d_S

Figure 4 – LPZ defined by an SPM (IEC 62305-4)

8.4 Protection of structures

8.4.1 Protection to reduce physical damage and life hazard

The structure to be protected shall be inside an LPZ 0_B or higher. This is achieved by means of a lightning protection system (LPS).

An LPS consists of both external and internal lightning protection systems.

The functions of the external LPS are

– to intercept a lightning flash to the structure (with an air-termination system),
– to conduct the lightning current safely to earth (with a down-conductor system),
– to disperse it into the earth (with an earth-termination system).

The function of the internal LPS is to prevent dangerous sparking within the structure, using equipotential bonding or a separation distance, *s*, (and hence electrical isolation) between the LPS components and other electrically conducting elements internal to the structure.

Four classes of LPS (I, II, III and IV) are defined as a set of construction rules, based on the corresponding LPL. Each set includes level-dependent (e.g. rolling sphere radius, mesh width etc.) and level-independent (e.g. cross-sections, materials etc.) construction rules.

Where surface resistivity of the soil outside and of the floor inside the structure is kept low, life hazard due to touch and step voltages is reduced:

– outside the structure, by insulation of the exposed conductive parts, by equipotentialization of the soil by means of a meshed earthing system, by warning notices and by physical restrictions;
– inside the structure, by equipotential bonding of lines at entrance point into the structure.

The LPS shall comply with the requirements of IEC 62305-3.

8.4.2 Protection to reduce the failure of internal systems

The protection against LEMP to reduce the risk of failure of internal systems shall limit

– surges due to lightning flashes to the structure resulting from resistive and inductive coupling,
– surges due to lightning flashes near the structure resulting from inductive coupling,
– surges transmitted by lines connected to the structure due to flashes to or near the lines,
– magnetic field directly coupling with apparatus.

NOTE Failure of apparatus due to electromagnetic fields directly radiated into the equipment is negligible provided that apparatus complies with radio-frequency (RF) radiated emission and immunity tests defined by relevant EMC product standards (see IEC 62305-2 and IEC 62305-4).

The system to be protected shall be located inside an LPZ 1 or higher. This is achieved by means of electrical and electronic system protection measures (SPM) consisting of magnetic shields attenuating the inducing magnetic field and/or suitable routing of wiring to reduce the induction loop. Bonding shall be provided at the boundaries of an LPZ for metal parts and systems crossing the boundaries. This bonding may be accomplished by means of bonding conductors or, when necessary, by surge protective devices (SPDs).

The protection measures for any LPZ shall comply with IEC 62305-4.

Effective protection against overvoltages, causing failures of internal systems, may also be achieved by means of isolating interfaces and/or a coordinated SPD system, limiting overvoltages below the rated impulse withstand voltage of the system to be protected.

Isolating interfaces and SPDs shall be selected and installed according to the requirements of IEC 62305-4.

Annex A
(informative)

Parameters of lightning current

A.1 Lightning flashes to earth

Two basic types of flashes exist:

– downward flashes initiated by a downward leader from cloud to earth;

– upward flashes initiated by an upward leader from an earthed structure to cloud.

Mostly downward flashes occur in flat territory, and to lower structures, whereas for exposed and/or higher structures upward flashes become dominant. With effective height, the probability of a direct strike to the structure increases (see IEC 62305-2:2010, Annex A) and the physical conditions change.

A lightning current consists of one or more different strokes:

– impulses with duration less than 2 ms (Figure A.1)

– long strokes with duration longer than 2 ms (Figure A.2).

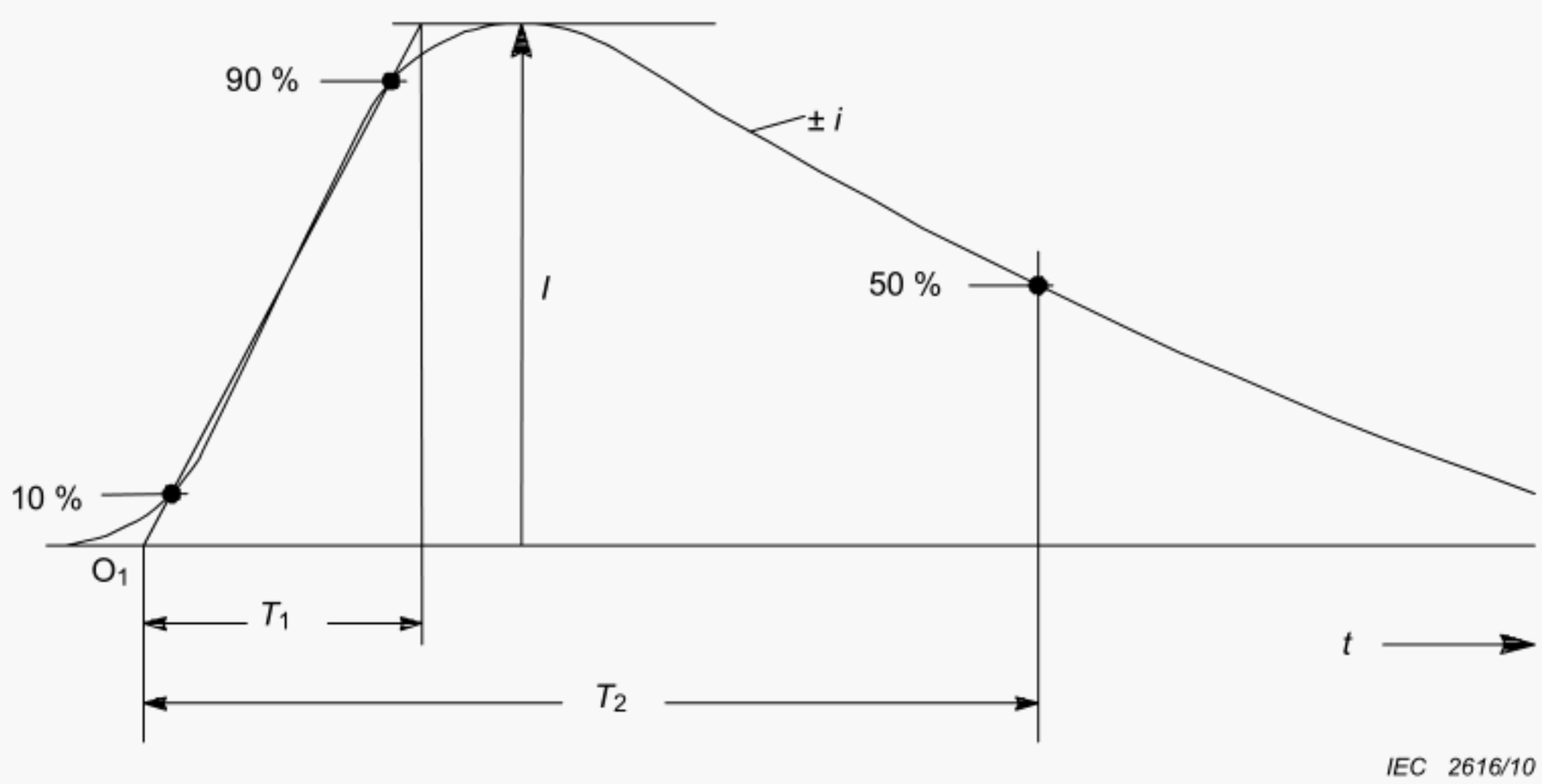

Key

O_1 virtual origin

I peak current

T_1 front time

T_2 time to half value

Figure A.1 – Definitions of impulse current parameters (typically T_2 < 2 ms)

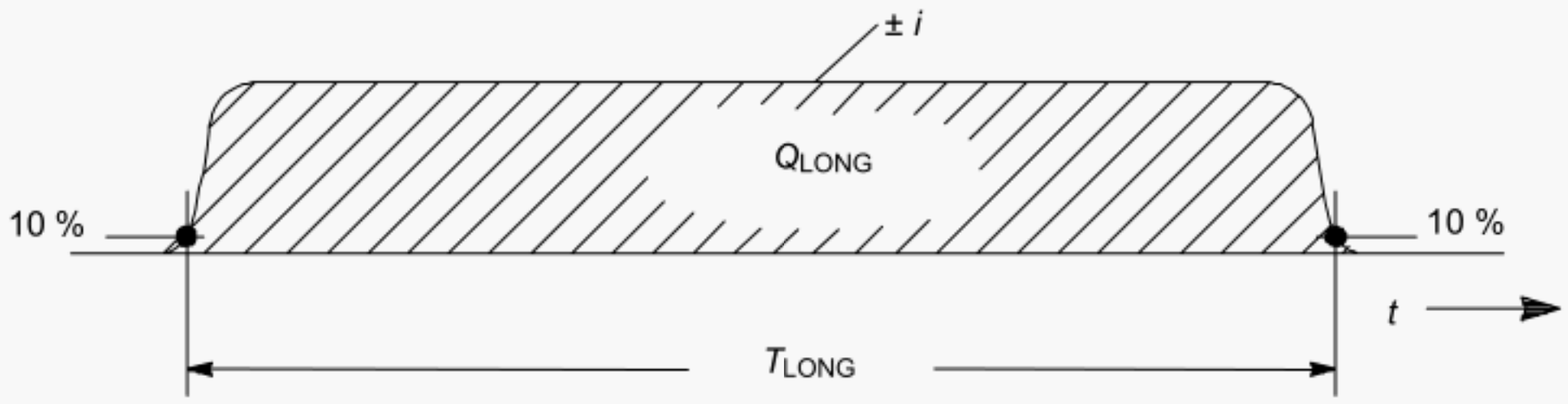

IEC 2617/10

Key

T_{LONG} duration time

--Q_{LONG} long stroke charge

Figure A.2 – Definitions of long duration stroke parameters (typically 2 ms <T_{LONG} <1 s)

Further differentiation of strokes comes from their polarity (positive or negative) and from their position during the flash (first, subsequent, and superimposed). The possible components are shown in Figure A.3 for downward flashes and in Figure A.4 for upward flashes.

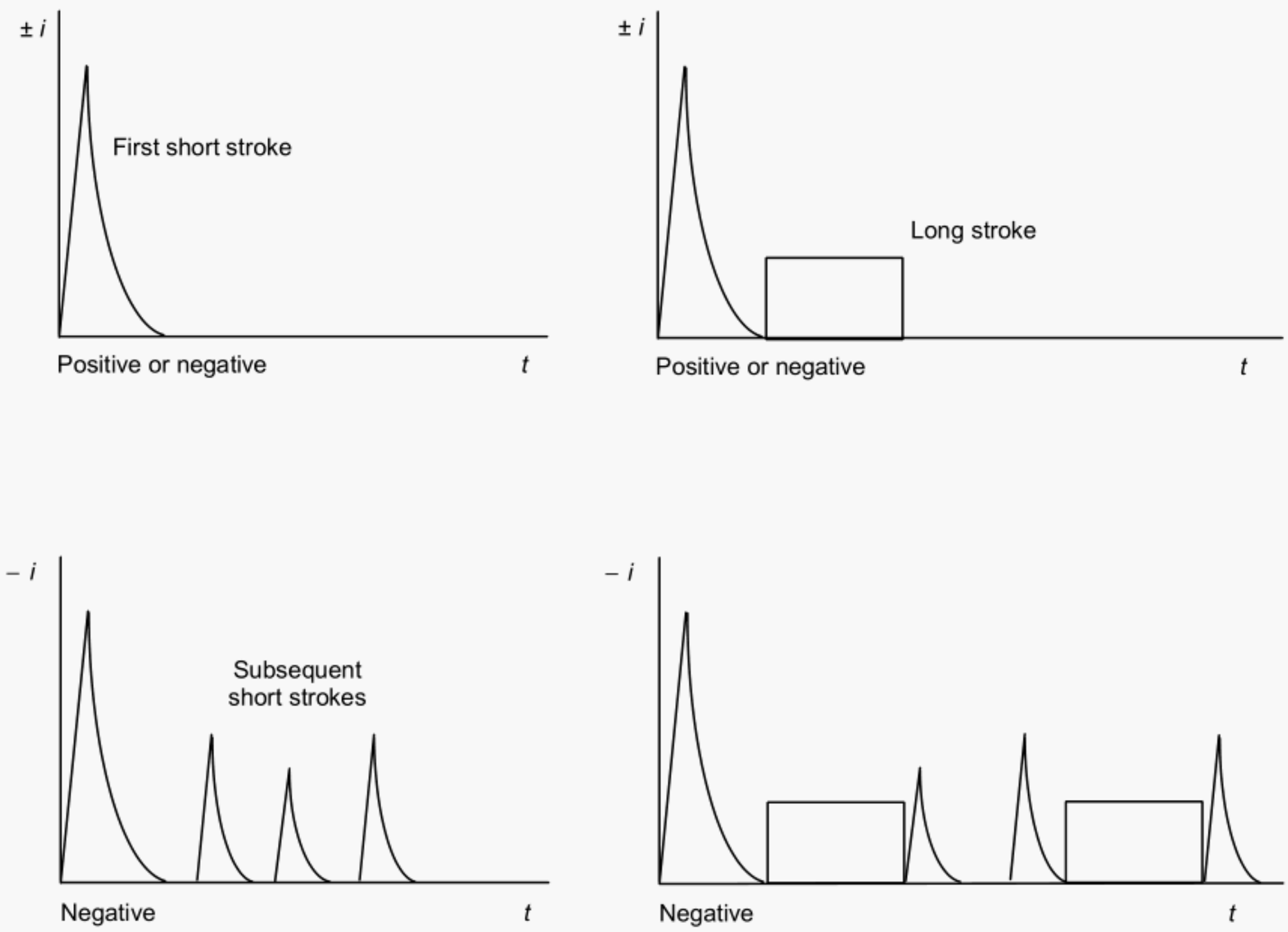

IEC 2618/10

Figure A.3 – Possible components of downward flashes (typical in flat territory and to lower structures)

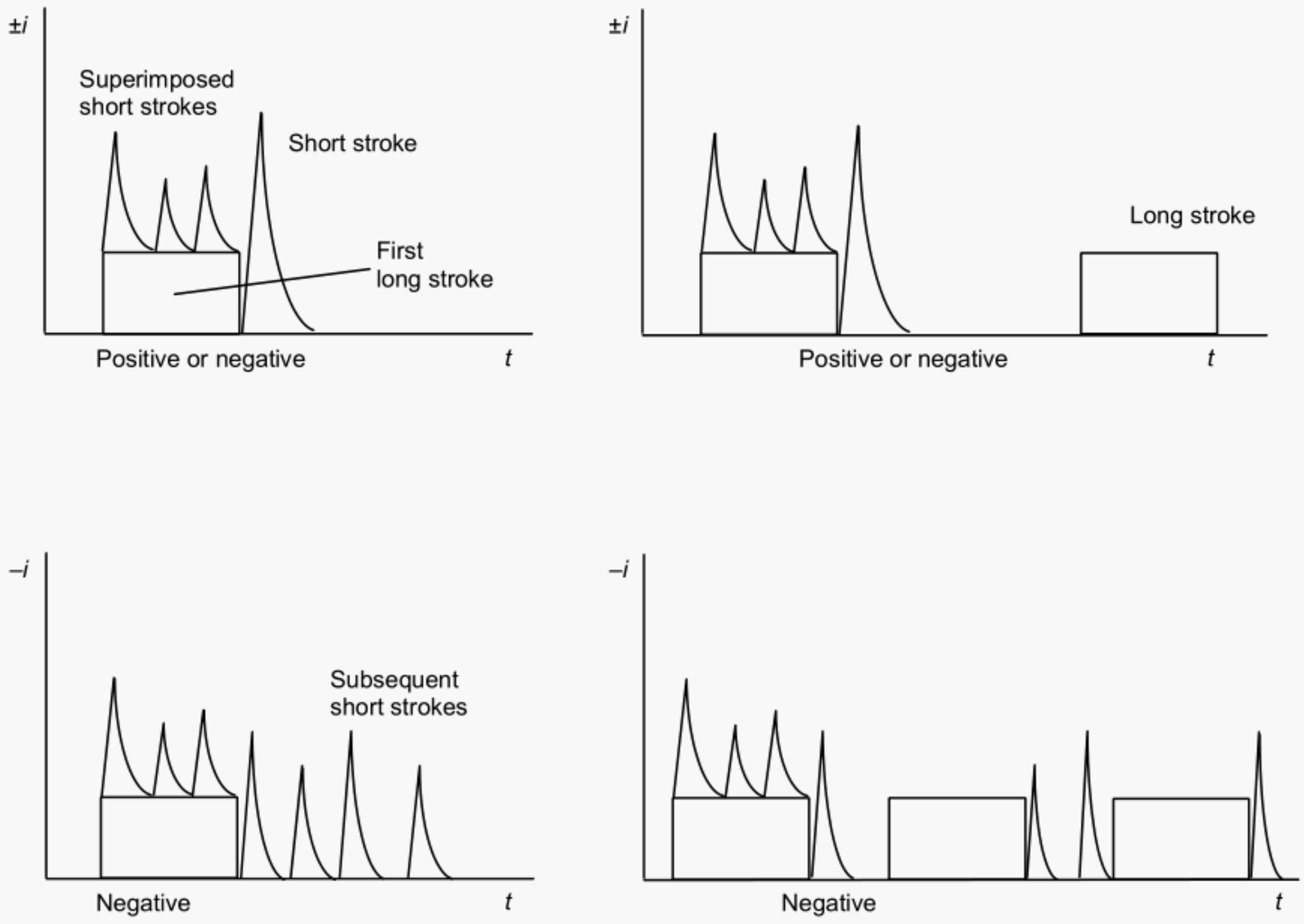

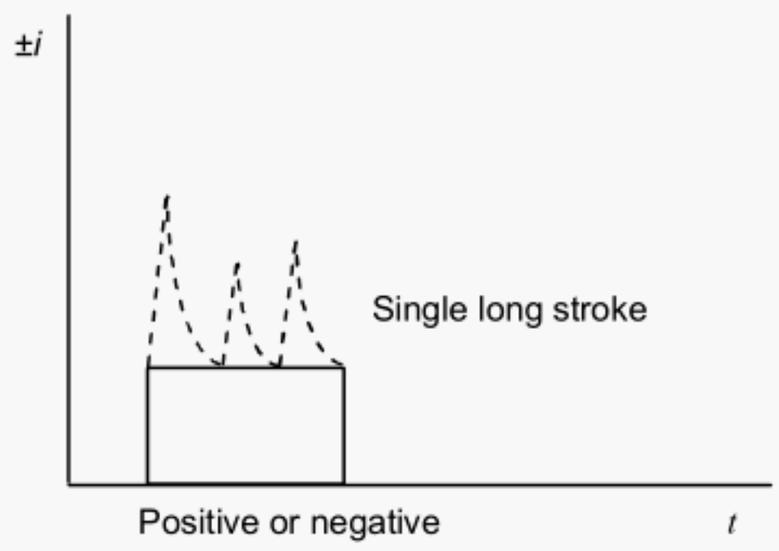

IEC 2619/10

Figure A.4 – Possible components of upward flashes (typical to exposed and/or higher structures)

The additional component in upward flashes is the first long stroke with or without up to some ten superimposed impulses. But all impulse current parameters of upward flashes are less than those of downward flashes. A higher long stroke charge of upward flashes is not yet confirmed. Therefore the lightning current parameters of upward flashes are considered to be covered by the maximum values given for downward flashes. A more precise evaluation of lightning current parameters and their height dependency with regard to downward and upward flashes is under consideration.

A.2 Lightning current parameters

The lightning current parameters in this part of IEC 62305 are based on the results of the International Council on Large Electrical Systems (CIGRE) data given in Table A.1. Their statistical distribution can be assumed to have a logarithmic normal distribution. The corresponding mean value μ and the dispersion $\sigma_{log}$are given in Table A.2 and the distribution function is shown in Figure A.5. On this basis, the probability of occurrence of any value of each parameter can be determined.

A polarity ratio of 10 % positive and 90 % negative flashes is assumed. The polarity ratio is a function of the territory. If no local information is available, the ratio given herein should be used.

The value of the probability of occurrence of lightning current peak values exceeding the previously considered is reported in Table A.3.

Table A.1 – Tabulated values of lightning current parameters taken from CIGRE (Electra No. 41 or No. 69) [3], [4]

Parameter	Fixed values for LPL I	Values			Type of stroke	Line in Figure A.5
		95 %	50 %	5 %		
I (kA)		4[a]	20[a]	90	First negative short[b]	1A+1B
	50	4,9	11,8	28,6	Subsequent negative short[b]	2
	200	4,6	35	250	First positive short (single)	3
Q_{FLASH} (C)		1,3	7,5	40	Negative flash	4
	300	20	80	350	Positive flash	5
Q_{SHORT} (C)		1,1	4,5	20	First negative short	6
		0,22	0,95	4	Subsequent negative short	7
	100	2	16	150	First positive short (single)	8
W/R (kJ/Ω)		6	55	550	First negative short	9
		0,55	6	52	Subsequent negative short	10
	10 000	25	650	15 000	First positive short	11
di/dt_{max} (kA/µs)		9,1	24,3	65	First negative short[b]	12
		9,9	39,9	161,5	Subsequent negative short[b]	13
	20	0,2	2,4	32	First positive short	14
$di/dt_{30\%/90\%}$ (kA/µs)	200	4,1	20,1	98,5	Subsequent negative short[b]	15
Q_{LONG} (C)	200				Long	
T_{LONG} (s)	0,5				Long	
Front duration (µs)		1,8	5,5	18	First negative short	
		0,22	1,1	4,5	Subsequent negative short	
		3,5	22	200	First positive short (single)	
Stroke duration (µs)		30	75	200	First negative short	
		6,5	32	140	Subsequent negative short	
		25	230	2 000	First positive short (single)	
Time interval (ms)		7	33	150	Multiple negative strokes	
Total flash duration (ms)		0,15	13	1 100	Negative flash (all)	
		31	180	900	Negative flash (without single)	
		14	85	500	Positive flash	

[a] The values of *I* = 4 kA and *I* = 20 kA correspond to a probability of 98 % and 80 %, respectively.

[b] Parameters and relevant values reported on Electra No. 69.

Table A.2 – Logarithmic normal distribution of lightning current parameters – Mean μ and dispersion σ_{log} calculated from 95 % and 5 % values from CIGRE (Electra No. 41 or No. 69) [3], [4]

Parameter	Mean μ	Dispersion[a] σ_{log}	Stroke type	Line in Figure A.5
I (kA)	(61,1)	0,576	First negative short (80 %)[b]	1A
	33,3	0,263	First negative short (80 %)[b]	1B
	11,8	0,233	Subsequent negative short[b]	2
	33,9	0,527	First positive short (single)	3
Q_{FLASH} (C)	7,21	0,452	Negative flash	4
	83,7	0,378	Positive flash	5
Q_{SHORT} (C)	4,69	0,383	First negative short	6
	0,938	0,383	Subsequent negative short	7
	17,3	0,570	First positive short (single)	8
W/R (kJ/Ω)	57,4	0,596	First negative short	9
	5,35	0,600	Subsequent negative short	10
	612	0,844	First positive short	11
di/dt_{max} (kA/µs)	24,3	0,260	First negative short[b]	12
	40,0	0,369	Subsequent negative short[b]	13
	2,53	0,670	First positive short	14
$di/d_{t30\%/90\ \%}$ (kA/µs)	20,1	0,420	Subsequent negative short[b]	15
Q_{LONG} (C)	200		Long	
T_{LONG} (s)	0,5		Long	
Front duration (µs)	5,69	0,304	First negative short	
	0,995	0,398	Subsequent negative short	
	26,5	0,534	First positive short (single)	
Stroke duration (µs)	77,5	0,250	First negative short	
	30,2	0,405	Subsequent negative short	
	224	0,578	First positive short (single)	
Time interval (ms)	32,4	0,405	Multiple negative strokes	
Total flash duration (ms)	12,8	1,175	Negative flash (all)	
	167	0,445	Negative flash (without single)	
	83,7	0,472	Positive flash	

[a] $\sigma_{log} = \log(X_{16\ \%}) - \log(X_{50\ \%})$ where X is the value of parameter.

[b] Parameters and relevant values reported on Electra No. 69.

Table A.3 – Values of probability *P* as function of the lightning current *I*

I (kA)	*P*
0	1
3	0,99
5	0,95
10	0,9
20	0,8
30	0,6
35	0,5
40	0,4
50	0,3
60	0,2
80	0,1
100	0,05
150	0,02
200	0,01
300	0,005
400	0,002
600	0,001

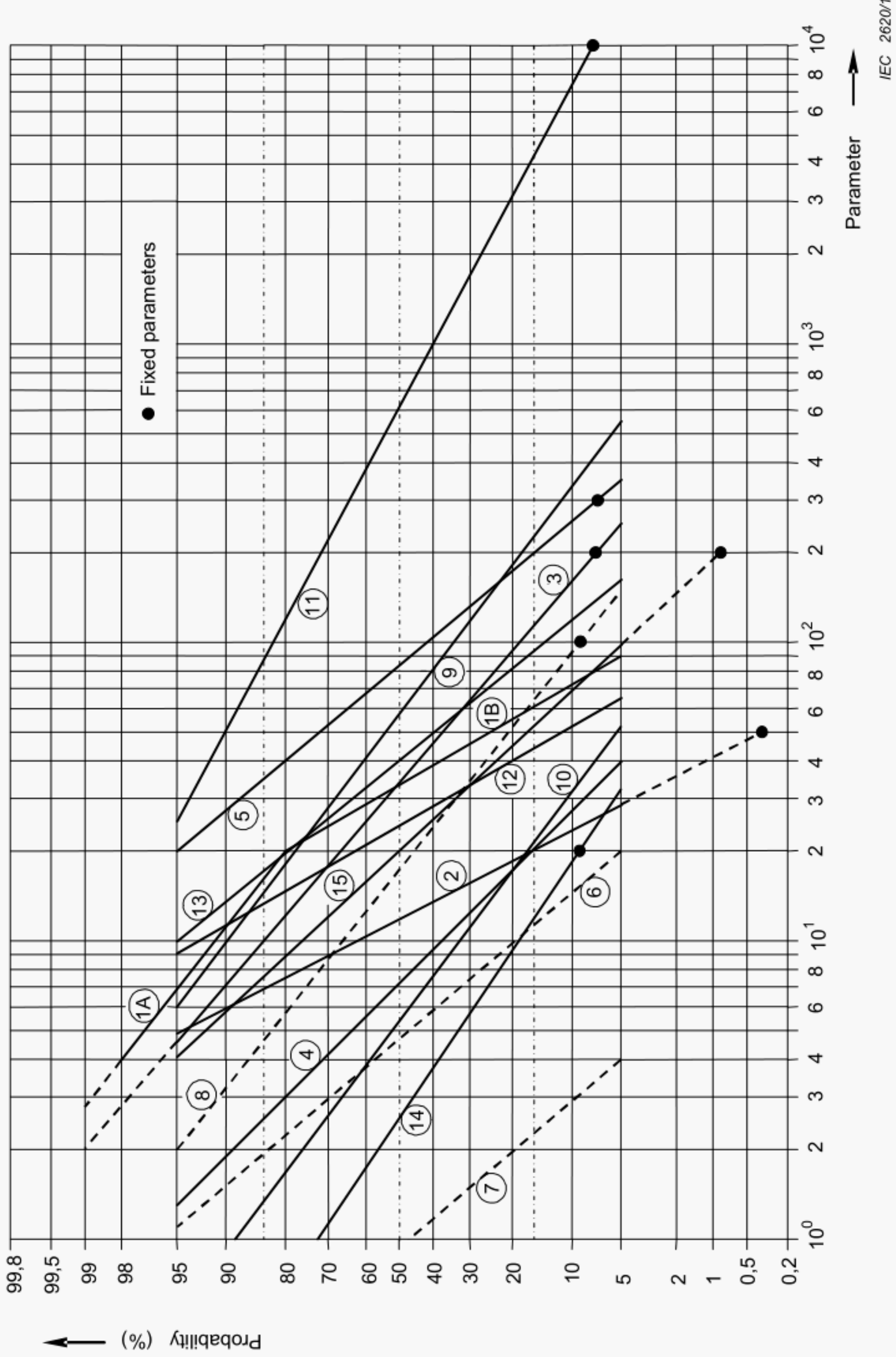

NOTE For numbering of curves see Tables A.1 and A.2.

Figure A.5 – Cumulative frequency distribution of lightning current parameters (lines through 95 % and 5 % value)

All values fixed for LPL given in this standard relate to both downward and upward flashes.

NOTE The value of lightning parameters is usually obtained from measurement taken on tall structures. Statistical distribution of roughly estimated lightning current peak values that does not consider the effect of tall structures is also available from lightning location systems.

A.3 Fixing the maximum lightning current parameters for LPL I

A.3.1 Positive impulse

The mechanical effects of lightning are related to the peak value of the current (I), and to the specific energy (W/R). The thermal effects are related to the specific energy (W/R) when resistive coupling is involved and to the charge (Q) when arcs develop to the installation. Overvoltages and dangerous sparking caused by inductive coupling are related to the average steepness (di/dt) of the lightning current front.

Each of the single parameters (I, Q, W/R, di/dt) tend to dominate each failure mechanism. This shall be taken into account in establishing test procedures.

A.3.2 Positive impulse and long stroke

The values of I, Q and W/R related to mechanical and thermal effects are determined from positive flashes (because their 10 % values are much higher than the corresponding 1 % values of the negative flashes). From Figure A.5 (lines 3, 5, 8, 11 and 14) the following values with probabilities below 10 % can be taken:

I = 200 kA

Q_{FLASH} = 300 C

Q_{SHORT} = 100 C

W/R = 10 MJ/Ω

di/dt = 20 kA/µs

For a first positive impulse according to Figure A.1, these values give a first approximation for the front time:

$$T_1 = I / (di/dt) = 10\ \mu s \quad (T_1 \text{ is of minor interest})$$

For an exponentially decaying stroke, the following formulae for approximate charge and energy values apply ($T_1 << T_2$):

$$Q_{SHORT} = (1/0{,}7) \times I \times T_2$$

$$W/R = (1/2) \times (1/0{,}7) \times I^2 \times T_2$$

These formulae, together with the values given above, lead to a first approximation for the time to half value:

$$T_2 = 350\ \mu s$$

For the long stroke, its charge can be approximately calculated from:

$$Q_{LONG} = Q_{FLASH} - Q_{SHORT} = 200\ C$$

Its duration time, according to Figure A.2, may be estimated from data in Table A.1 as:

$$T_{LONG} = 0{,}5\ s$$

A.3.3 First negative impulse

For some inductive coupling effects, the first negative impulse leads to the highest induced voltages, e.g. for cables within cable ducts made of reinforced concrete. From Figure A.5 (lines 1 and 12) the following values with probabilities below 1 % can be taken:

$$I = 100 \text{ kA}$$

$$\mathrm{d}i/\mathrm{d}t = 100 \text{ kA/µs}$$

For a first negative impulse according to Figure A.1 these values give a first approximation for its front time of:

$$T_1 = I / (\mathrm{d}i/\mathrm{d}t) = 1{,}0 \text{ µs}$$

Its time to half value may be estimated from the stroke duration of first negative impulses:

$$T_2 = 200 \text{ µs} \quad (T_2 \text{ is of minor interest}).$$

A.3.4 Subsequent impulse

The maximum value of average steepness d*i*/d*t* related to the dangerous sparking caused by inductive coupling is determined from subsequent impulses of negative flashes (because their 1 % values are somewhat higher than the 1 % values from first negative strokes or the corresponding 10 % values of the positive flashes). From Figure A.5 (lines 2 and 15) the following values with probabilities below 1 % can be taken:

$$I = 50 \text{ kA}$$

$$\mathrm{d}i/\mathrm{d}t = 200 \text{ kA/µs}$$

For a subsequent impulse according to Figure A.1 these values give a first approximation for its front time of:

$$T_1 = I / (\mathrm{d}i/\mathrm{d}t) = 0{,}25 \text{ µs}$$

Its time to half value may be estimated from the stroke duration of negative subsequent impulses:

$$T_2 = 100 \text{ µs} \quad (T_2 \text{ is of minor interest}).$$

A.4 Fixing the minimum lightning current parameters

The interception efficiency of an air-termination system depends on the minimum lightning current parameters and on the related rolling sphere radius. The geometrical boundary of areas which are protected against direct lightning flashes can be determined using the rolling sphere method.

Following the electro-geometric model, the rolling sphere radius *r* (final jump distance) is correlated with the peak value of the first impulse current. In an IEEE working group report[5], the relation is given as

$$r = 10 \times I^{0{,}65} \tag{A.1}$$

where

r is the rolling sphere radius (m);

I is the peak current (kA).

For a given rolling sphere radius *r* it can be assumed that all flashes with peak values higher than the corresponding minimum peak value *I* will be intercepted by natural or

dedicated air terminations. Therefore, the probability for the peak values of negative and positive first strokes from Figure A.5 (lines 1A and 3) is assumed to be the interception probability. Taking into account the polarity ratio of 10 % positive and 90 % negative flashes, the total interception probability can be calculated (see Table 5).

Annex B
(informative)

Time functions of the lightning current for analysis purposes

The current shapes of

– the first positive impulse 10/350 µs,
– the first negative impulse 1/200 µs,
– the subsequent negative impulses 0,25/100 µs,

may be defined as:

$$i = \frac{I}{k} \times \frac{(t/T_1)^{10}}{1+(t/T_1)^{10}} \times \exp(-t/T_2) \qquad \text{(B.1)}$$

where

I is the peak current;
k is the correction factor for the peak current;
t is the time;
T_1 is the front time constant;
T_2 is the tail time constant.

For the current shapes of the first positive impulse, the first negative impulse and the subsequent negative impulses for different LPL, the parameters given in Table B.1 apply. The analytic curves as function of time are shown in Figures B.1 to B.6.

Table B.1 – Parameters for Equation (B.1)

Parameters	First positive impulse			First negative impulse			Subsequent negative impulse		
	LPL			LPL			LPL		
	I	II	III-IV	I	II	III-IV	I	II	III-IV
I (kA)	200	150	100	100	75	50	50	37,5	25
k	0,93	0,93	0,93	0,986	0,986	0,986	0,993	0,993	0,993
T_1 (µs)	19	19	19	1,82	1,82	1,82	0,454	0,454	0,454
T_2 (µs)	485	485	485	285	285	285	143	143	143

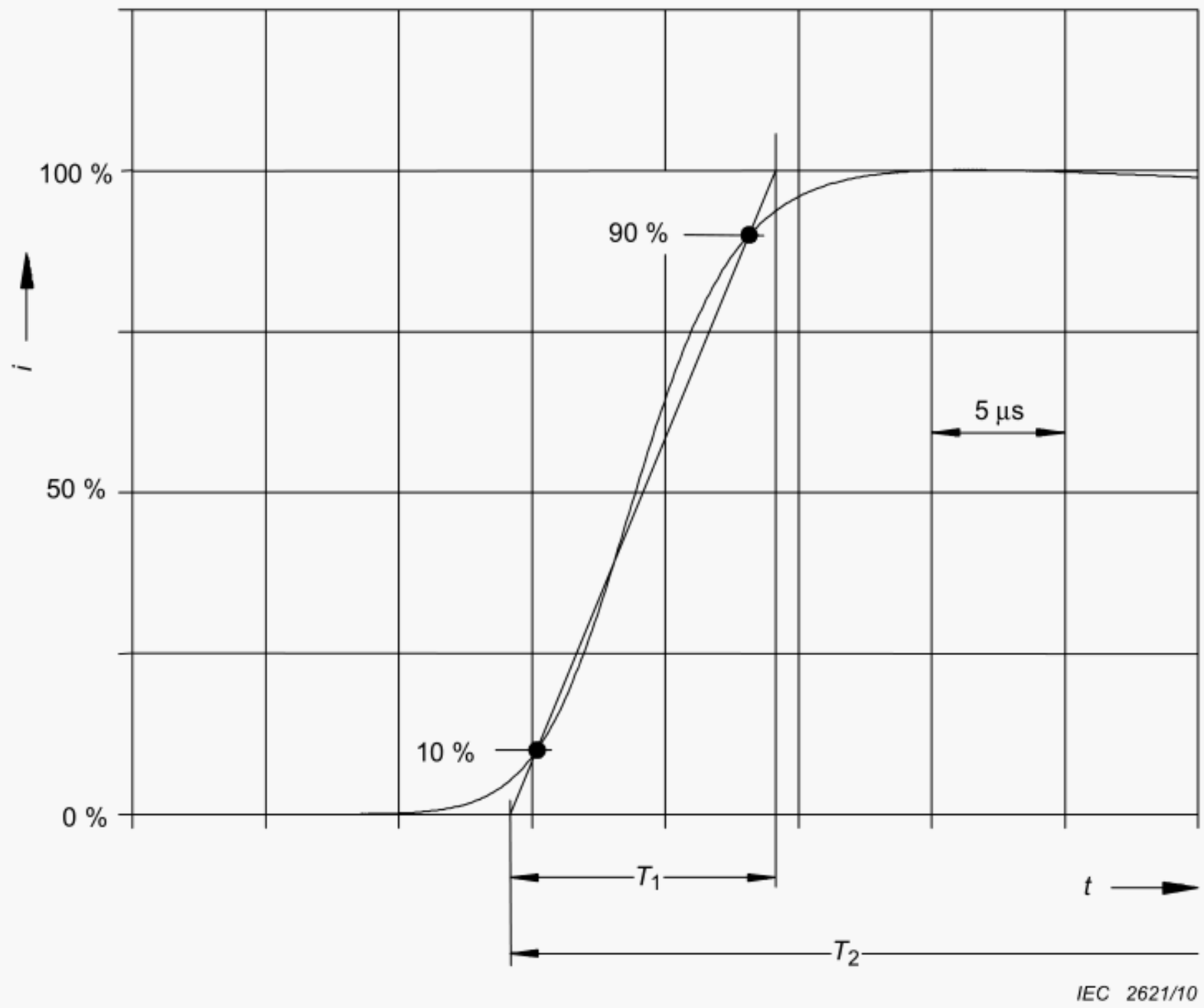

Figure B.1 – Shape of the current rise of the first positive impulse

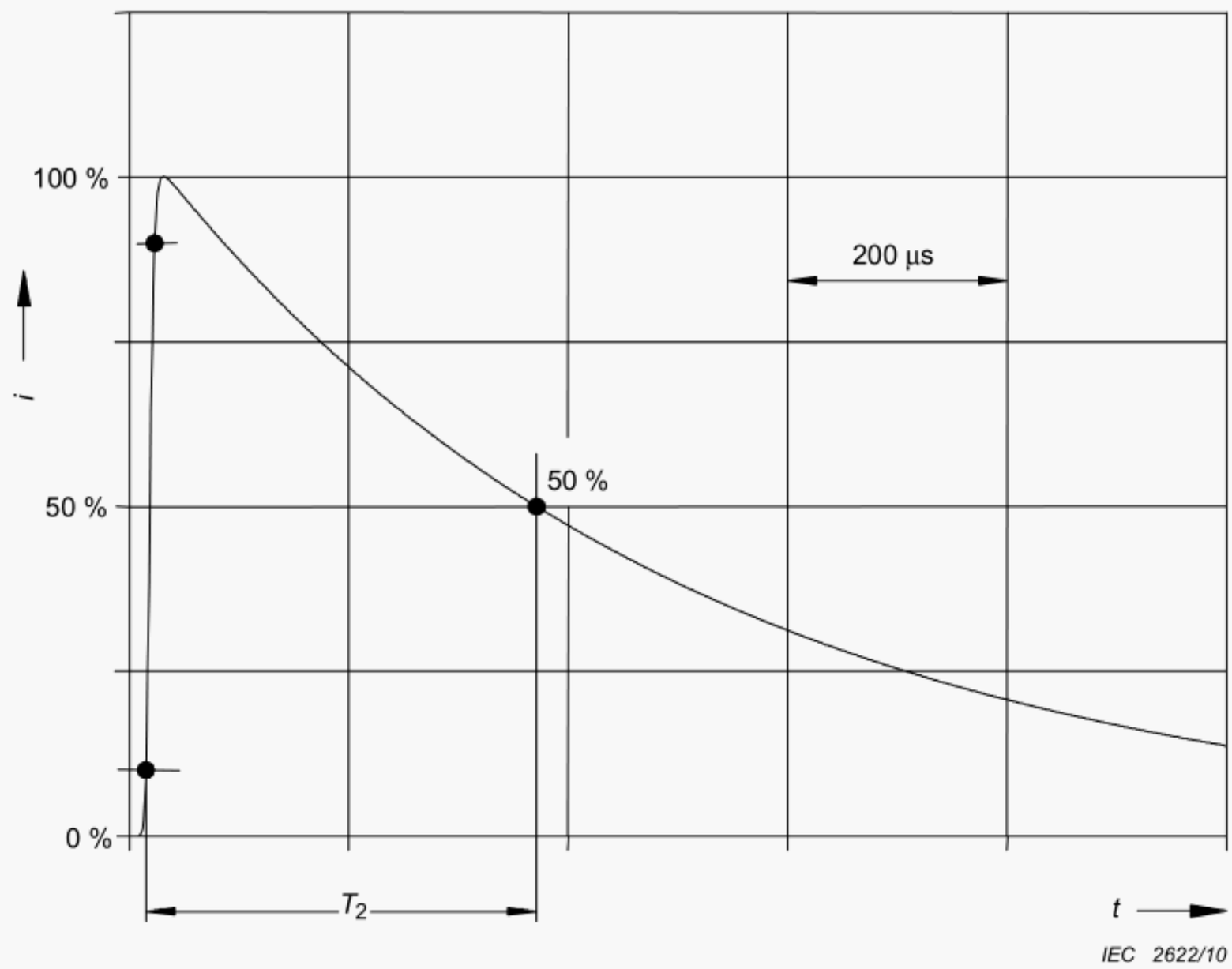

Figure B.2 – Shape of the current tail of the first positive impulse

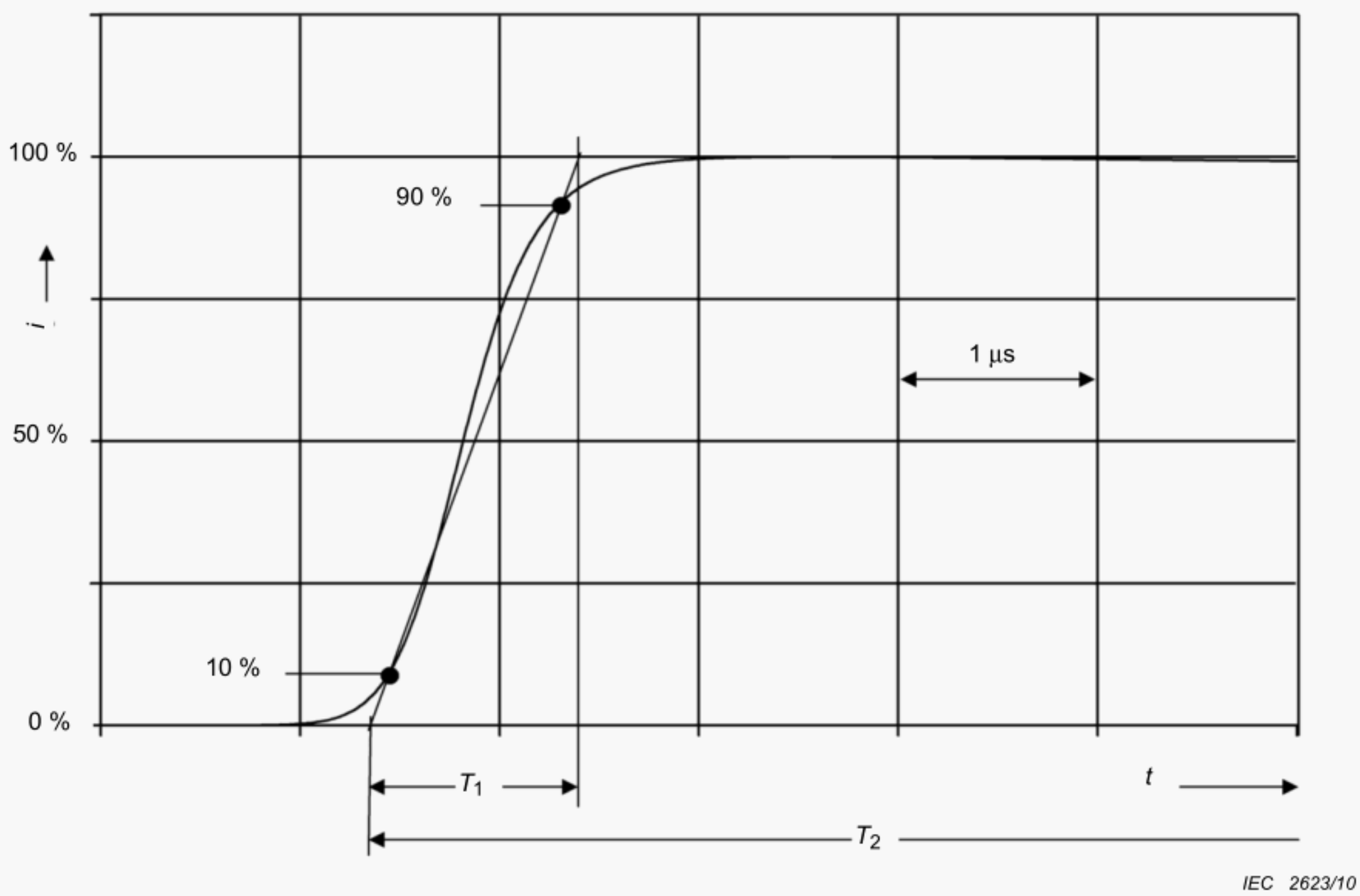

Figure B.3 – Shape of the current rise of the first negative impulse

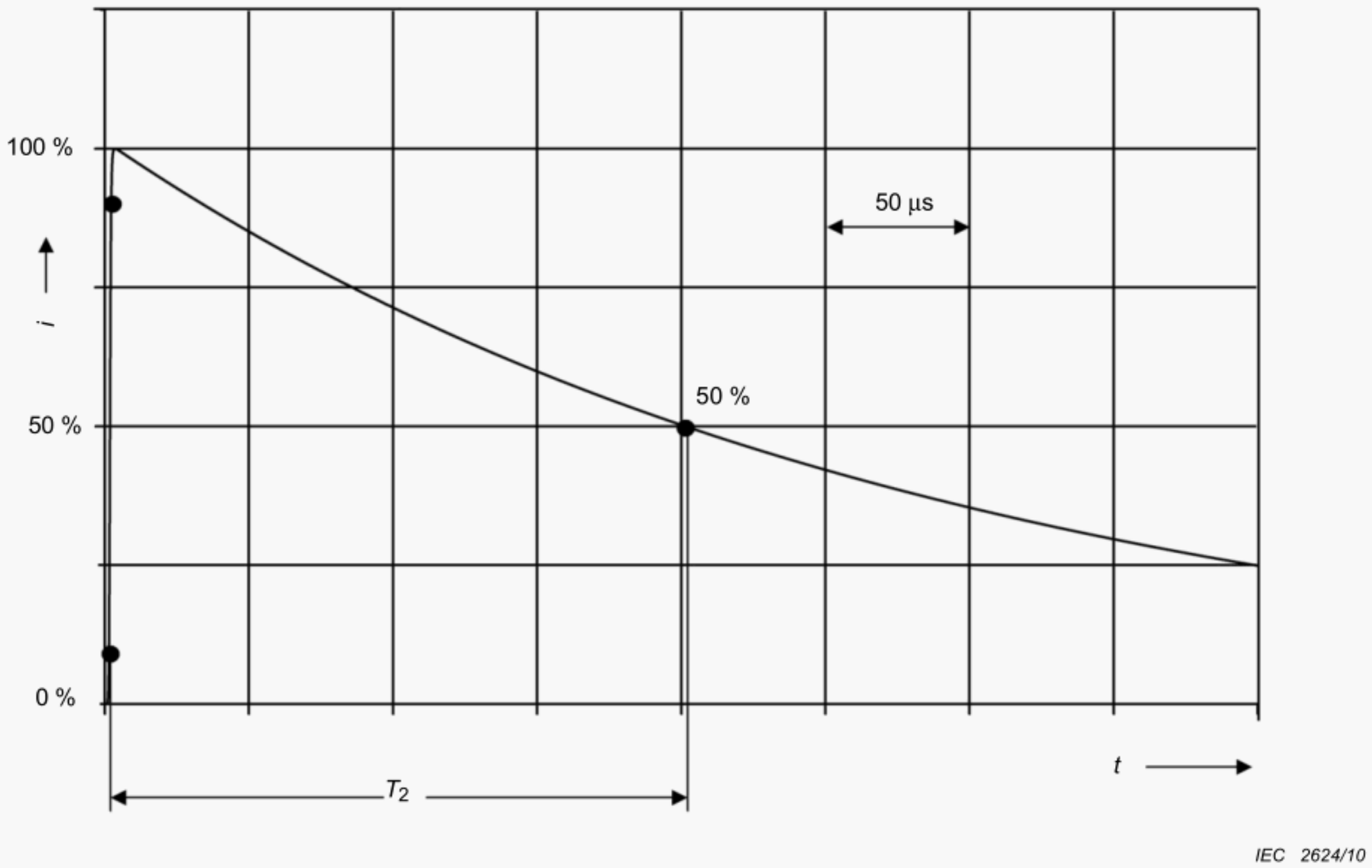

Figure B.4 – Shape of the current tail of the first negative impulse

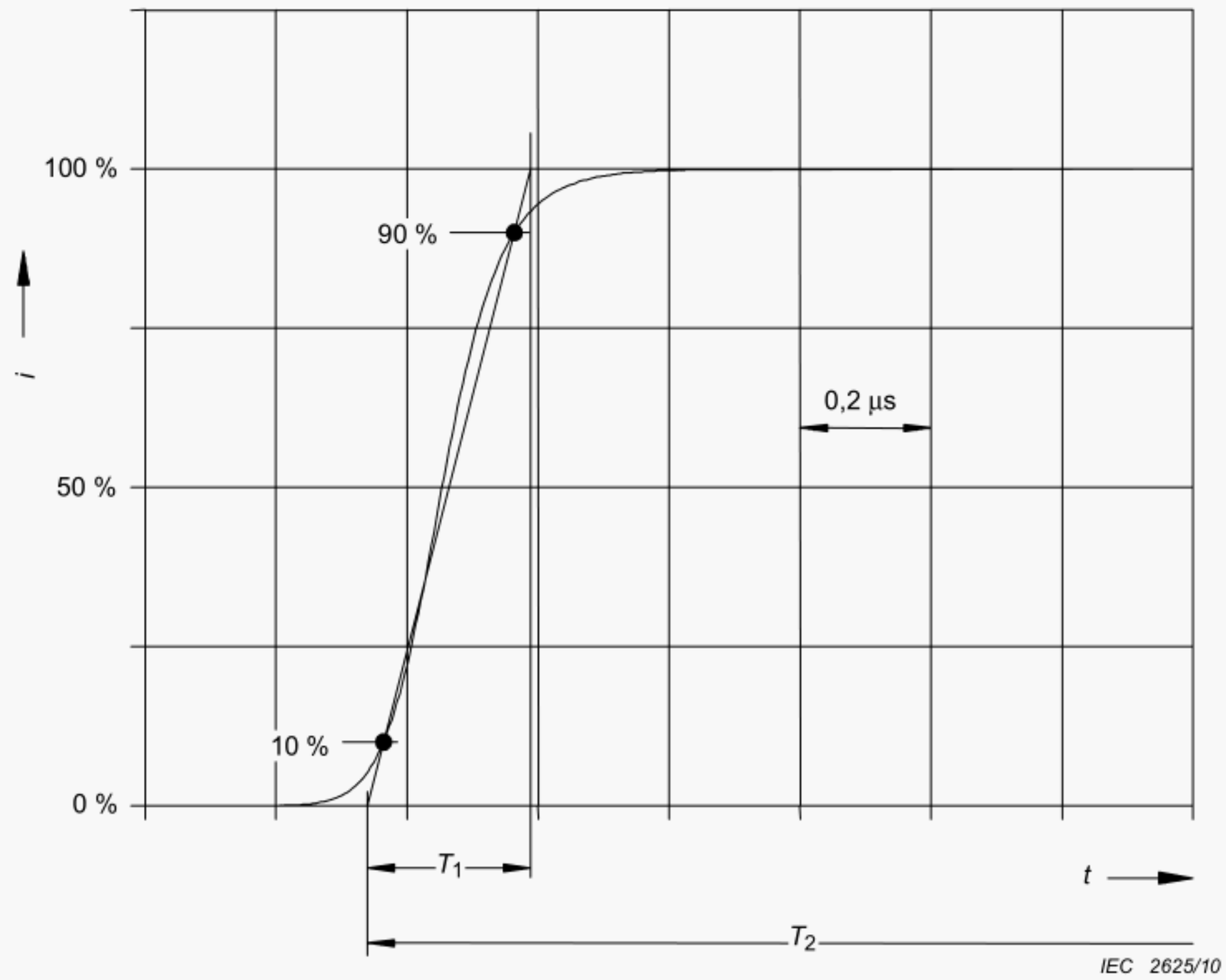

Figure B.5 – Shape of the current rise of the subsequent negative impulses

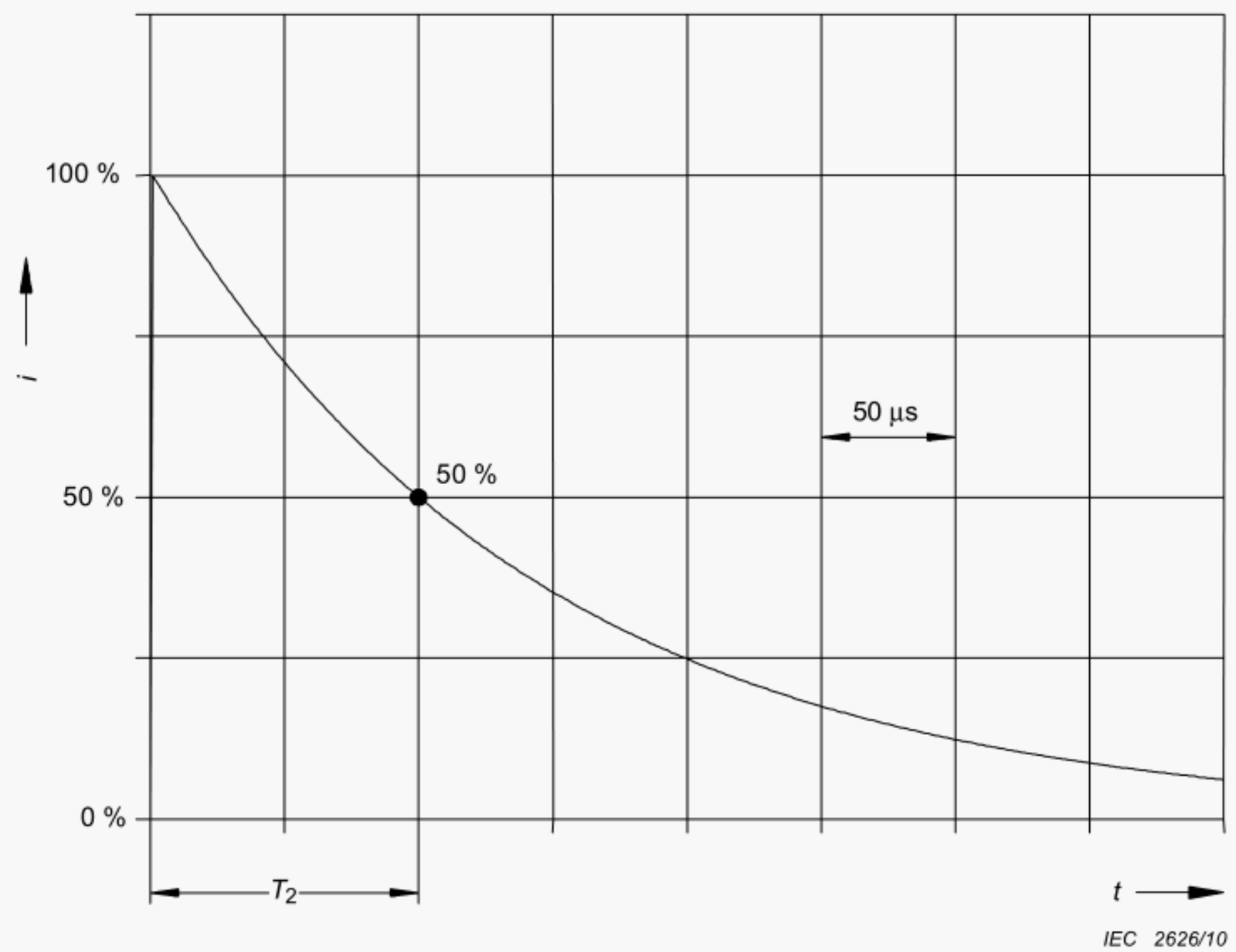

Figure B.6 – Shape of the current tail of the subsequent negative impulses

The long stroke can be described by a rectangular waveshape with an average current I and a duration T_{LONG} according to Table 3.

From the analytic curves as function of time, the amplitude density of the lightning current (Figure B.7) can be derived.

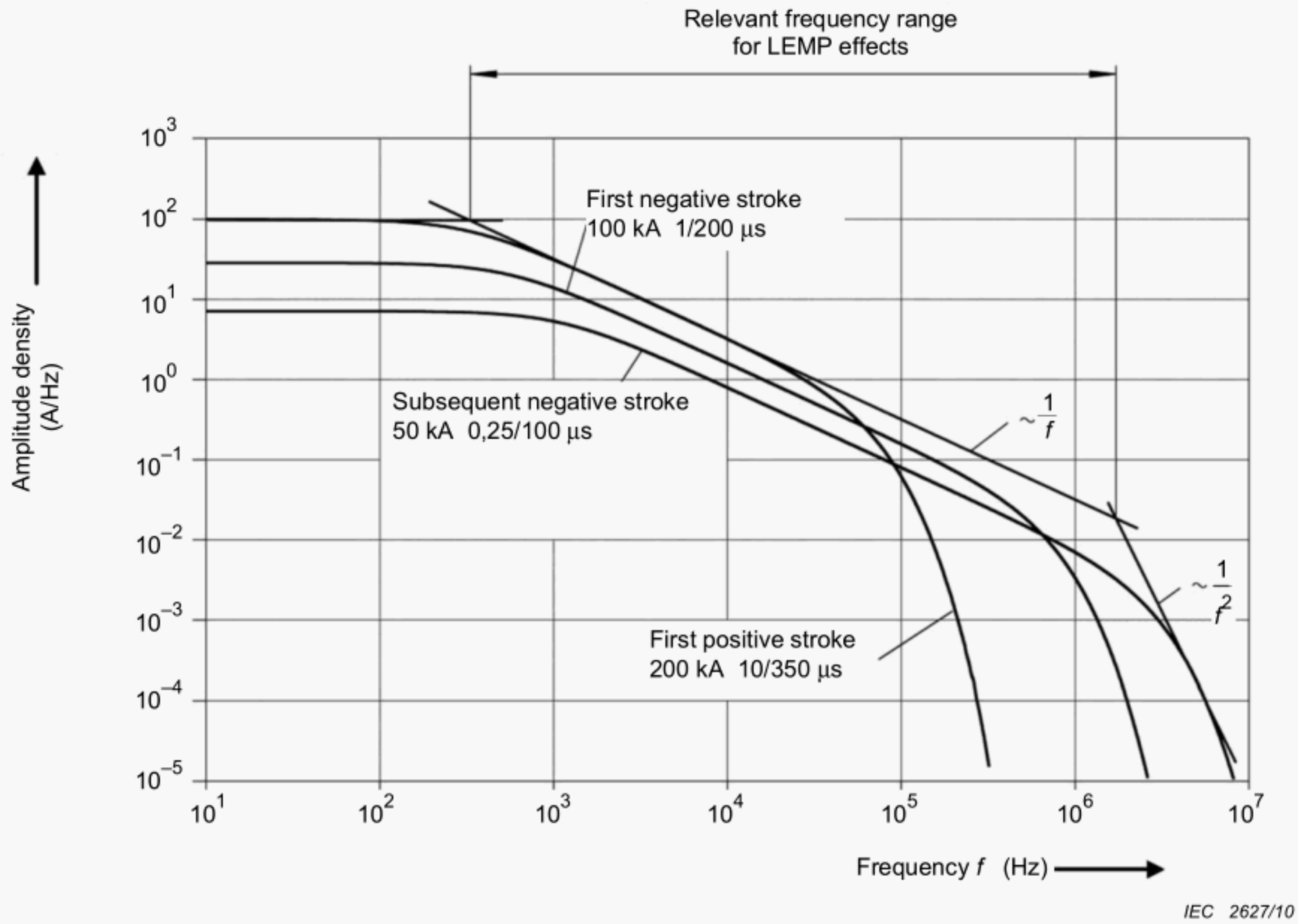

Figure B.7 – Amplitude density of the lightning current according to LPL I

Annex C
(informative)

Simulation of the lightning current for test purposes

C.1 General

If a structure is struck by lightning, the lightning current is distributed within the structure. When testing individual protection measure components, this must be taken into account by choosing appropriate test parameters for each component. To this end, a system analysis has to be performed.

C.2 Simulation of the specific energy of the first positive impulse and the charge of the long stroke

Test parameters are defined in Tables C.1 and C.2 and an example test generator is shown in Figure C.1. This generator may be used to simulate the specific energy of the first positive impulse combined with the charge of the long stroke.

The tests may be used to assess mechanical integrity, freedom from adverse heating and melting effects.

The test parameters relevant for simulation of the first positive impulse (peak current I, the specific energy W/R, and the charge Q_{SHORT}) are given in Table C.1. These parameters should be obtained in the same impulse. This can be achieved by an approximately exponentially decaying current with T_2 in the range of 350 µs.

The test parameters relevant for the simulation of the long stroke (charge Q_{LONG} and duration T_{LONG}) are given in Table C.2.

Depending on the test item and the expected damage mechanisms, the tests for the first positive impulse or the long stroke can be applied singly or as a combined test, where the long stroke follows the first impulse immediately. Tests for arc melting should be performed using both polarities.

NOTE The first negative impulse is not to be used for test purposes.

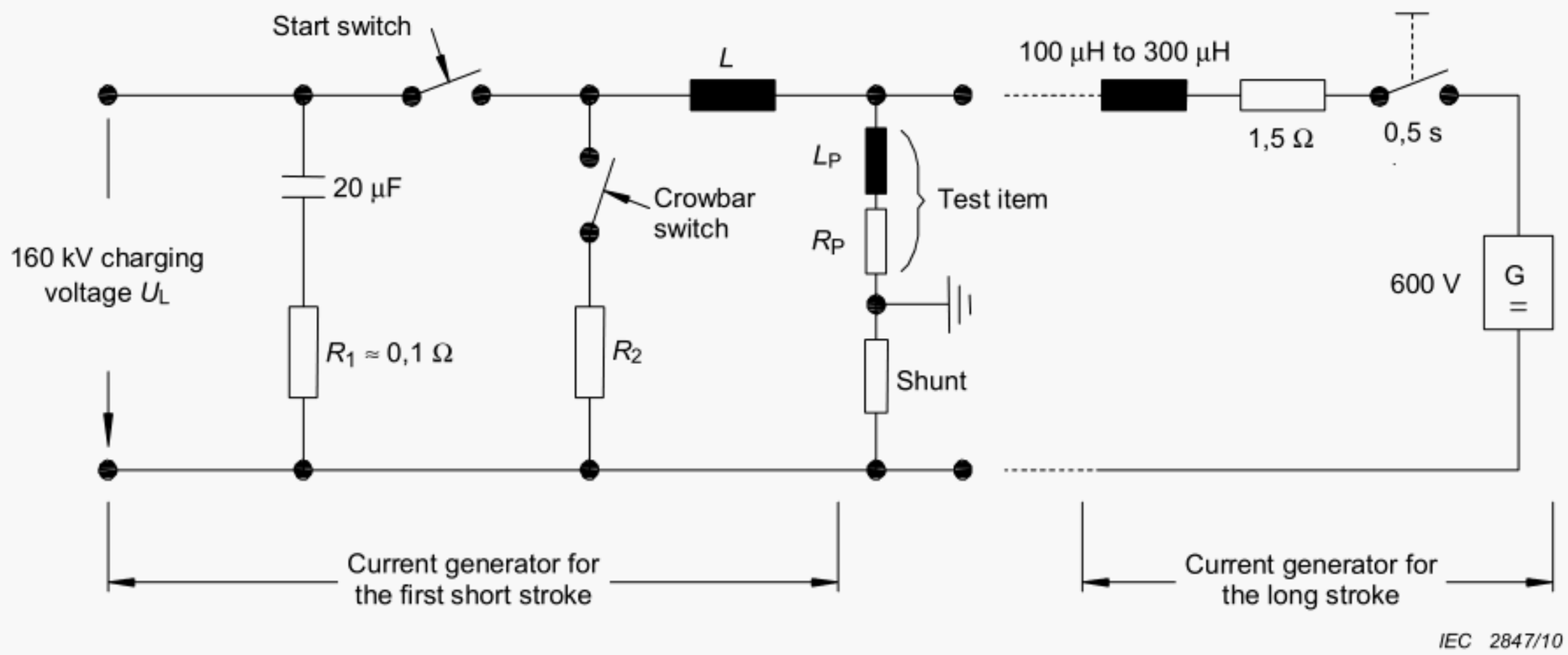

NOTE The values apply to LPL I.

Figure C.1 – Example test generator for the simulation of the specific energy of the first positive impulse and the charge of the long stroke

Table C.1 – Test parameters of the first positive impulse

Test parameters		LPL			Tolerance %
		I	II	III – IV	
Peak current I	(kA)	200	150	100	±10
Charge Q_{SHORT}	(C)	100	75	50	±20
Specific energy W/R	(MJ/Ω)	10	5,6	2,5	±35

Table C.2 – Test parameters of the long stroke

Test parameters		LPL			Tolerance %
		I	II	III – IV	
Charge Q_{LONG}	(C)	200	150	100	±20
Duration T_{LONG}	(s)	0,5	0,5	0,5	±10

C.3 Simulation of the front current steepness of the impulses

The steepness of the current determines the magnetically induced voltages in loops installed near conductors carrying lightning currents.

The current steepness of an impulse is defined as the rise of the current Δi during rise time Δt (Figure C.2). The test parameters relevant for the simulation of this current steepness are given in Table C.3. Example test generators are shown in Figures C.3 and C.4, (these may be used to simulate the front steepness of a lightning current associated with a direct lightning strike). The simulation can be carried out for a first positive impulse and a subsequent negative impulse.

NOTE This simulation covers the front current steepness of impulses. The tail of the current has no influence on this kind of simulation.

The simulation according to Clause C.3 may be applied independently or in combination with the simulation according to Clause C.2.

For further information on test parameters simulating the effects of lightning on LPS components, see Annex D.

Table C.3 – Test parameters of the impulses

Test parameters		LPL			Tolerance %
		I	II	III – IV	
First positive impulse					
Δi	(kA)	200	150	100	±10
Δt	(µs)	10	10	10	±20
Subsequent negative impulses					
Δi	(kA)	50	37,5	25	±10
Δt	(µs)	0,25	0,25	0,25	±20

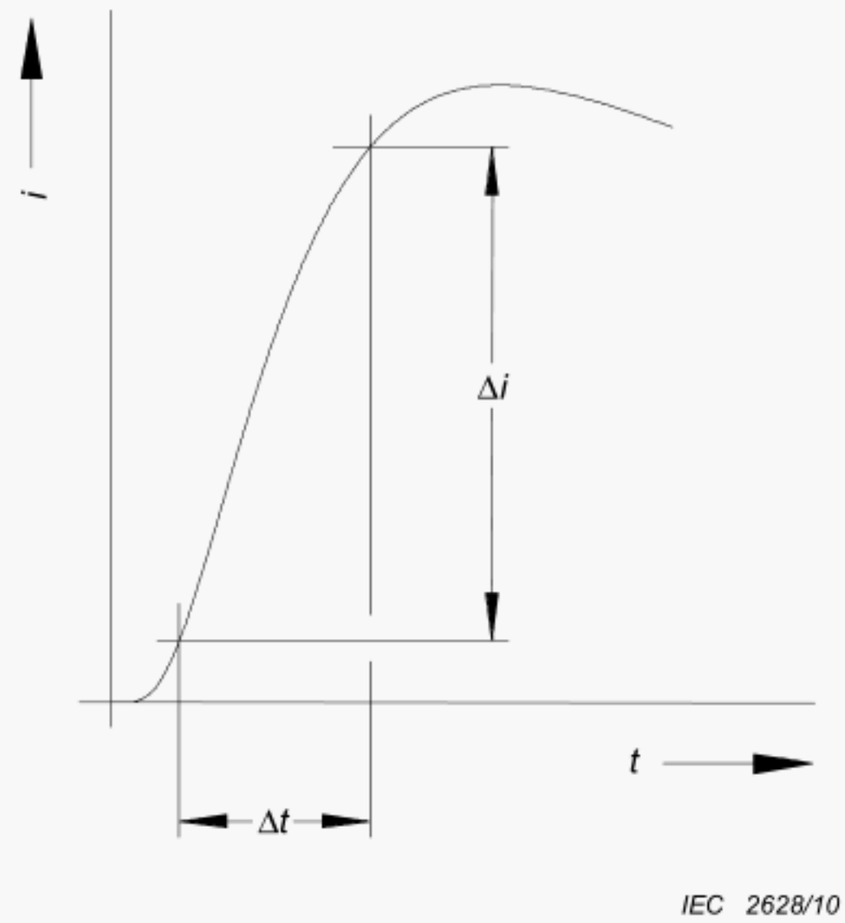

Figure C.2 – Definition of the current steepness in accordance with Table C.3

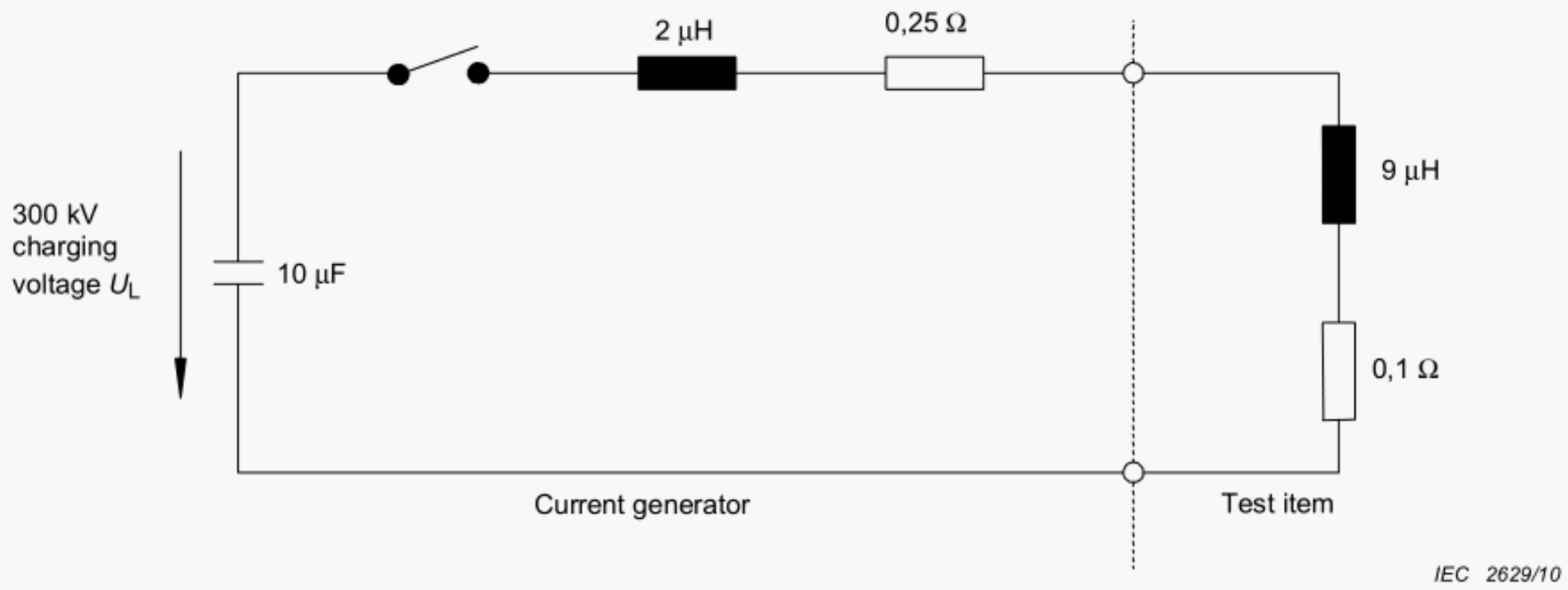

NOTE These values apply to LPL I.

Figure C.3 – Example test generator for the simulation of the front steepness of the first positive impulse for large test items

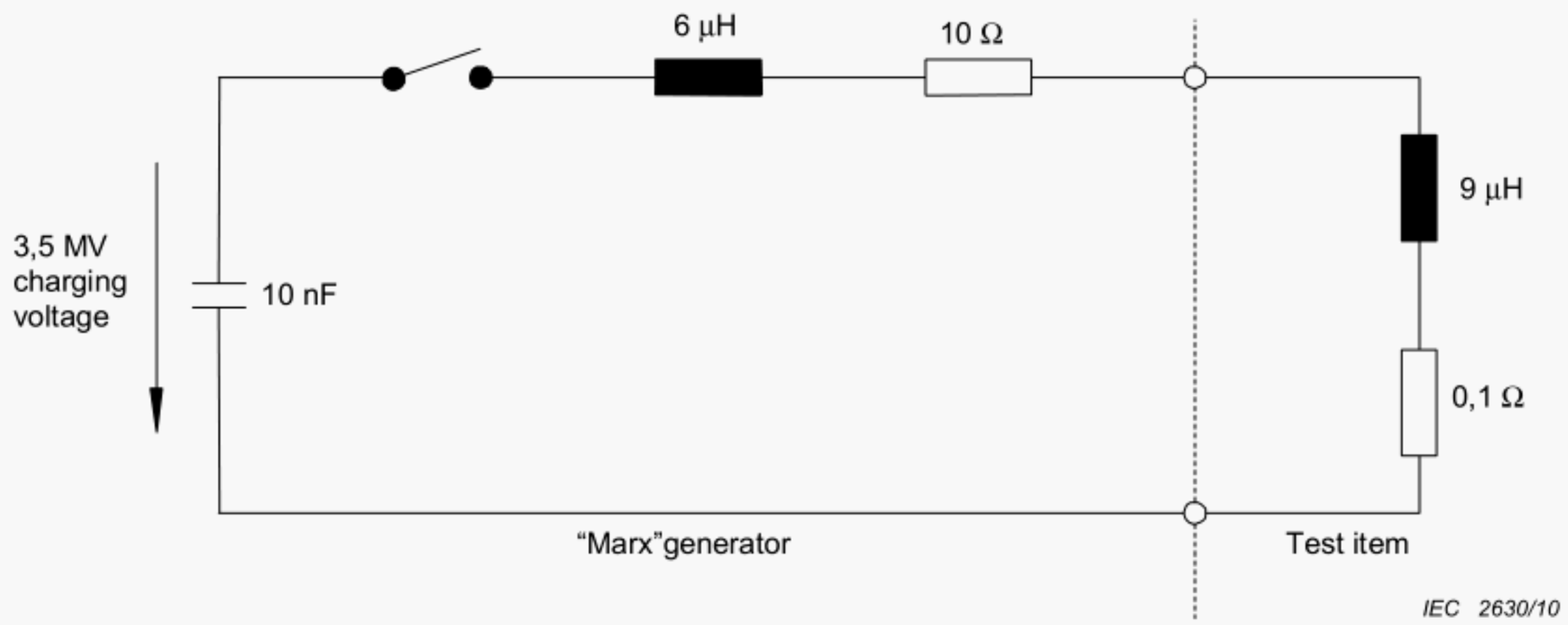

NOTE These values apply to LPL I.

Figure C.4 – Example test generator for the simulation of the front steepness of the subsequent negative impulses for large test items

Annex D
(informative)

Test parameters simulating the effects of lightning on LPS components

D.1 General

Annex D gives the basic parameters that may be used in a laboratory to simulate the effects of lightning. This annex covers all the components of an LPS subjected to all or a major part of the lightning current and may be used in conjunction with the standards specifying the requirements and the tests for each specific component.

NOTE Parameters relevant to system aspects (e.g. for the coordination of surge protective devices) are not considered in this annex.

D.2 Current parameters relevant to the point of strike

The lightning current parameters playing a role in the physical integrity of an LPS are in general the peak current I, the charge Q, the specific energy W/R, the duration T and the average steepness of the current di/dt. Each parameter tends to dominate a different failure mechanism, as analysed in detail below. The current parameters to be considered for tests are combinations of these values, selected to represent in laboratory the actual failure mechanism of the part of the LPS being tested. The criteria for the selection of the outstanding quantities are given in Clause D.5.

Table D.1 records the maximum values of I, Q, W/R, T and di/dt to be considered for tests, as a function of the protection level required.

Table D.1 – Summary of the lightning threat parameters to be considered in the calculation of the test values for the different LPS components and for the different LPL

Component	Main problem	Lightning threat parameters					Notes
Air-termination	Erosion at attachment point (e.g. thin metal sheets)	LPL	Q_{LONG} C	T			
		I	200	<1 s (apply Q_{LONG} in a single shot)			
		II	150				
		III-IV	100				
Air-termination and down-conductor	Ohmic heating	LPL	W/R kJ/Ω	T			Dimensioning with IEC 62305-3 render testing superfluous
		I	10 000	Apply W/R in an adiabatic configuration			
		II	5 600				
		III-IV	2 500				
	Mechanical effects	LPL	I kA	W/R kJ/Ω			
		I	200	10 000			
		II	150	5 600			
		III-IV	100	2 500			
Connecting components	Combined effects (thermal, mechanical and arcing)	LPL	I kA	W/R kJ/Ω	T		
		I	200	10 000	<2 ms (apply I and W/R in a single pulse)		
		II	150	5 600			
		III-IV	100	2 500			
Earth-terminations	Erosion at attachment point	LPL	Q_{LONG} C	T			Dimensioning usually determined by mechanical / chemical aspects (corrosion etc.)
		I	200	<1 s (apply Q_{LONG} in a single shot)			
		II	150				
		III-IV	100				
SPDs containing spark gaps	Combined effects (thermal, mechanical and arcing)	LPL	I kA	Q_{SHORT} C	W/R kJ/Ω	di/dt kA/µs	Apply I, Q_{SHORT}, and W/R in a single pulse (duration T<2 ms); apply Δi/Δt in a separate pulse
		I	200	100	10 000	200	
		II	150	75	5 600	150	
		III-IV	100	50	2 500	100	
SPDs containing metal-oxide resistor blocks	Energy effects (overload)	LPL	Q_{SHORT} C				Both aspects need to be checked.
		I	100				
		II	75				
		III-IV	50				
	Dielectric effect (flashover/ cracking)	LPL	I kA	T			Separate tests can be considered
		I	200	<2 ms (apply I in a single pulse)			
		II	150				
		III-IV	100				

D.3 Current sharing

The parameters given in the Table D.1 are relevant to the lightning current at the point of strike. In fact, the current flows to earth through more than one path, as several down-conductors and natural conductors are normally present in an external LPS. Additionally, different lines normally enter the protected structure (water and gas pipes, power and telecommunication lines, etc.). For the determination of the parameters of the actual current flowing in specific components of an LPS, the sharing of the current has to be taken into account. Preferably, current amplitude and shape through a component at a specific location of the LPS should be evaluated. Where an individual evaluation is not possible, the current parameters may be assessed by means of the following procedures.

For the evaluation of the current sharing within the external LPS, the configuration factor k_c (see Annex C of IEC 62305-3:2010) may be adopted. This factor provides an estimate of the share of the lightning current flowing in down-conductors of the external LPS under worst-case conditions.

For the evaluation of the current sharing in presence of external conductive parts and power and telecommunication lines connected to the protected structure, the approximate values of k_e and k'_e considered in Annex E may be adopted.

The above-described approach is applicable for the evaluation of the peak value of the current flowing in one particular path to earth. The calculation of the other parameters of the current is carried out as follows:

$$I_p = k \times I \tag{D.1}$$

$$Q_p = k \times Q \tag{D.2}$$

$$(W/R)_p = k^2 \times (W/R) \tag{D.3}$$

$$\left(\frac{di}{dt}\right)_p = k \times \left(\frac{di}{dt}\right) \tag{D.4}$$

where

x_p is the value of the quantity considered (peak current I_p, charge Q_p, specific energy $(W/R)_p$, current steepness $(di/dt)_p$) relevant to a particular path to earth "p";

x is the value of the quantity considered (peak current I, charge Q, specific energy (W/R), current steepness (di/dt)) relevant to the total lightning current;

k is the current sharing factor:

- k_c for external LPS (see Annex C of IEC 62305-3:2010);
- k_e, k'_e in the presence of external conductive parts and power and telecommunication lines entering the protected structure (see Annex E).

D.4 Effects of lightning current causing possible damage

D.4.1 Thermal effects

Thermal effects linked with lightning current are relevant to the resistive heating caused by the circulation of an electric current flowing through the resistance of a conductor or into an LPS. Thermal effects are also relevant to the heat generated in the root of the arcs at the attachment point and in all the isolated parts of an LPS involved in arc development (e.g. spark gaps).

D.4.1.1 Resistive heating

Resistive heating takes place in any component of an LPS carrying a significant part of the lightning current. The minimum cross-sectional area of conductors must be sufficient to prevent overheating of the conductors to a level that would present a fire hazard to the surroundings. Despite the thermal aspects discussed in D.4.1, the mechanical withstand and durability criteria have to be considered for parts exposed to atmospheric conditions and/or corrosion. The evaluation of conductor heating due to lightning current flow is sometimes necessary when problems can arise because of the risk of personal injury and of fire or explosion damages.

Guidance is given below to evaluate the temperature rise of conductors subjected to the flow of a lightning current.

An analytical approach is presented as follows:

The instantaneous power dissipated as heat in a conductor due to an electrical current is expressed as:

$$P(t) = i^2(t) \times R \tag{D.5}$$

The thermal energy generated by the complete lightning pulse is therefore the ohmic resistance of the lightning path through the LPS component considered, multiplied by the specific energy of the pulse. This thermal energy is expressed in units of Joules (J) or Watt·seconds (W×s).

$$W = R \times \int i^2(t) \times \mathrm{d}t \tag{D.6}$$

In a lightning discharge, the high specific energy phases of the lightning flash are too short in duration for any heat generated in the structure to be dispersed significantly. The phenomenon is therefore to be considered adiabatic.

The temperature of the conductors of the LPS can be evaluated as follows:

$$\theta - \theta_0 = \frac{1}{\alpha}\left[\exp\left(\frac{\frac{W}{R} \times \alpha \times \rho_0}{q^2 \times \gamma \times C_w}\right) - 1\right] \tag{D.7}$$

Characteristic values of the physical parameters reported in Equation (D.7), for different materials used in the LPS are recorder in Table D.2 where

θ-θ_0 is the temperature rise of the conductors (K);

α is the temperature coefficient of the resistance (1/K);

W/R is the specific energy of the current impulse (J/Ω);

ρ_0 is the specific ohmic resistance of the conductor at ambient temperature (Ωm);

q is the cross-sectional area of the conductor (m^2);

γ is the material density (kg/m^3);

C_w is the thermal capacity (J/kgK);

C_s is the latent heat of melting (J/kg);

θ_s is the melting temperature (°C).

Table D.2 – Physical characteristics of typical materials used in LPS components

Quantity	Material			
	Aluminium	Mild steel	Copper	Stainless steel[a]
ρ_0 (Ωm)	29×10^{-9}	120×10^{-9}	$17{,}8 \times 10^{-9}$	700×10^{-9}
α (1/K)	$4{,}0 \times 10^{-3}$	$6{,}5 \times 10^{-3}$	$3{,}92 \times 10^{-3}$	$0{,}8 \times 10^{-3}$
γ (kg/m^3)	2 700	7 700	8 920	8 000
θ_s (°C)	658	1 530	1 080	1 500
C_s (J/kg)	397×10^3	272×10^3	209×10^3	–
C_w (J/kgK)	908	469	385	500

[a] Austenitic non-magnetic.

Table D.3 reports, as an example of application of this equation, the temperature rise of conductors made of different materials, as a function of the *W/R* and of the conductor cross-sectional area.

Table D.3 – Temperature rise for conductors of different sections as a function of *W/R*

Cross-section mm^2	Material											
	Aluminium			Mild steel			Copper			Stainless steel[a]		
	W/R MJ/Ω			***W/R*** MJ/Ω			***W/R*** MJ/Ω			***W/R*** MJ/Ω		
	2,5	**5,6**	**10**	**2,5**	**5,6**	**10**	**2,5**	**5,6**	**10**	**2,5**	**5,6**	**10**
4	–	–	–	–	–	–	–	–	–	–	–	–
10	564	–	–	–	–	–	169	542	–	–	–	–
16	146	454	–	1 120	–	–	56	143	309	–	–	–
25	52	132	283	211	913	–	22	51	98	940	–	–
50	12	28	52	37	96	211	5	12	22	190	460	940
100	3	7	12	9	20	37	1	3	5	45	100	190

[a] Austenitic non-magnetic.

The typical lightning stroke is characterized by a short duration stroke (time to half value of a few 100 µs) and high current peak value. Under these circumstances, the skin effect should also be taken into consideration. However, in most of the practical cases linked with LPS components, the material characteristics (dynamic magnetic permeability of the LPS conductor) and the geometrical configurations (cross-sectional area of the LPS conductor) reduce the contribution of the skin effect to the temperature rise of the conductor to negligible levels.

The component of the lightning flash most relevant to this heating mechanism is the first return stroke.

D.4.1.2 Attachment point thermal damage

Attachment point thermal damage can be observed on all components of an LPS on which an arc development takes place, i.e. air-termination systems, spark gaps, etc.

Material melting and erosion can occur at the attachment point. In fact, in the arc root area there is a large thermal input from the arc root itself, as well as a concentration of ohmic heating due to the high current densities. Most of the thermal energy is generated at or very

close to the surface of the metal. The heat generated in the immediate root area is in excess of that which can be absorbed into the metal by conduction and the excess is irradiated or lost in melting or vaporizing of metal. The severity of the process is linked to the current amplitude and to the duration.

D.4.1.2.1 General

Several theoretical models have been developed for the calculation of thermal effects on metal surfaces at the attachment point of a lightning channel. For sake of simplicity, this standard will report only the anode-or-cathode voltage drop model. The application of this model is particularly effective for thin metal skins. In all cases, it gives conservative results as it postulates that all the energy injected in the lightning attachment point is used to melt or vaporize conductor material, neglecting the heat diffusion within the metal. Other models introduce the dependence of the lightning attachment point damage on the duration of the current impulse.

D.4.1.2.2 Anode-or-cathode voltage drop model

The energy input W at the arc root is assumed as given by the anode/cathode voltage drop $u_{a,c}$ multiplied by the charge Q of the lightning current:

$$W = \int_0^\infty u_{a,c}(t)\, i(t)\, dt = u_{a,c} \int_0^\infty |i(t)|\, dt \qquad \text{(D.8)}$$

As $u_{a,c}$ is fairly constant in the current range considered here, the charge of the lightning current (Q) is primarily responsible for the energy conversion in the arc root.

The anode-or-cathode voltage drop $u_{a,c}$ has a value of a few tens of volts.

A simplified approach assumes that all of the energy developed at the arc root is used only for melting. Equation (D.9) uses this assumption but leads to an overestimate of the melted volume.

$$V = \frac{u_{a,c} \times Q}{\gamma} \cdot \frac{1}{C_w \times (\theta_s - \theta_u) + C_s} \qquad \text{(D.9)}$$

where

V is the volume of metal melted (m^3);

$u_{a,c}$ is the anode-or-cathode voltage drop (assumed as constant) (V);

Q is the charge of the lightning current (C);

γ is the material density (kg/m^3);

C_w is the thermal capacity (J/kgK);

θ_s is the melting temperature (°C);

θ_u is the ambient temperature (°C);

C_s is the latent heat of melting (J/kg).

Characteristic values of the physical parameters reported in this equation, for different materials used in an LPS, are recorded in Table D.2.

Basically, the charge to be considered is the sum of the charge of the return stroke and the lightning continuing current. Laboratory experience has revealed that the effects of the return stroke charge are of minor importance when compared to the effects of the continuing current.

D.4.2 Mechanical effects

Mechanical effects caused by the lightning current depend on the amplitude and the duration of the current as well as on the elastic characteristics of the affected mechanical structure. Mechanical effects also depend on the friction forces acting between parts of the LPS in contact with one another, where relevant.

D.4.2.1 Magnetic interaction

Magnetic forces occur between two current-carrying conductors or, if only one current-carrying conductor exists, where it forms a corner or a loop.

When a current flows through a circuit, the amplitude of the electrodynamic forces developed at the various positions of the circuit depend on both the amplitude of the lightning current and the geometrical configuration of the circuit. The mechanical effect of these forces, however, depends not only on their amplitude but also on the general form of the current, its duration, as well as on the geometrical configuration of the installation.

D.4.2.1.1 Electrodynamic forces

Electrodynamic forces developed by a current, *i*, flowing in a conductor having long parallel sections of length *l* and distance *d* (long and small loop), as shown in Figure D.1, can be approximately calculated using the following equation:

$$F(t) = \frac{\mu_o}{2\pi} \times i^2(t) \times \frac{l}{d} = 2 \times 10^{-7} \times i^2(t) \times \frac{l}{d} \qquad \text{(D.10)}$$

where

$F(t)$ is the electrodynamic force (N);

i is the current (A);

μ_o is the magnetic permeability of free space (vacuum) ($4\pi \times 10^{-7}$ H/m);

l is the length of conductors (m);

d is the distance between the straight parallel sections of the conductor (m).

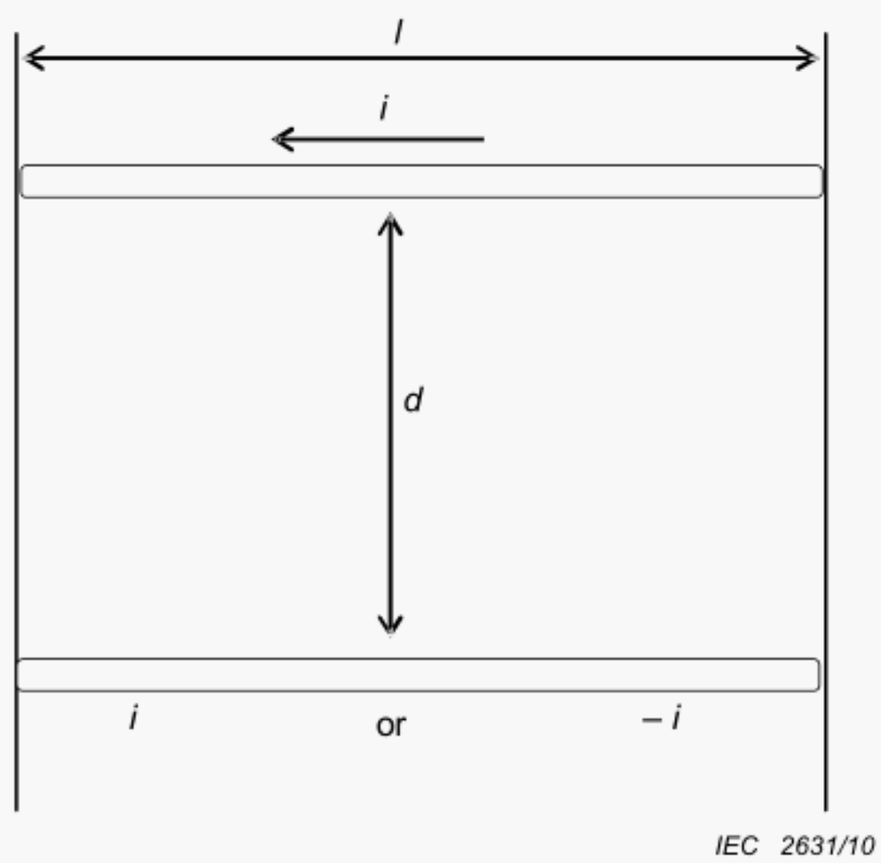

Figure D.1 – General arrangement of two conductors for the calculation of electrodynamic force

In an LPS an example is given by a symmetric corner arrangement of conductors, forming an angle of 90°, with a clamp positioned in the vicinity of the corner as shown in Figure D.2. The diagram of the stresses for this configuration is reported in Figure D.3. The axial force on the horizontal conductor tends to pull the conductor out of the clamp. The numerical value of the force along the horizontal conductor, considering a peak current value of 100 kA and a length of a vertical conductor of 0,5 m, is shown in Figure D.4.

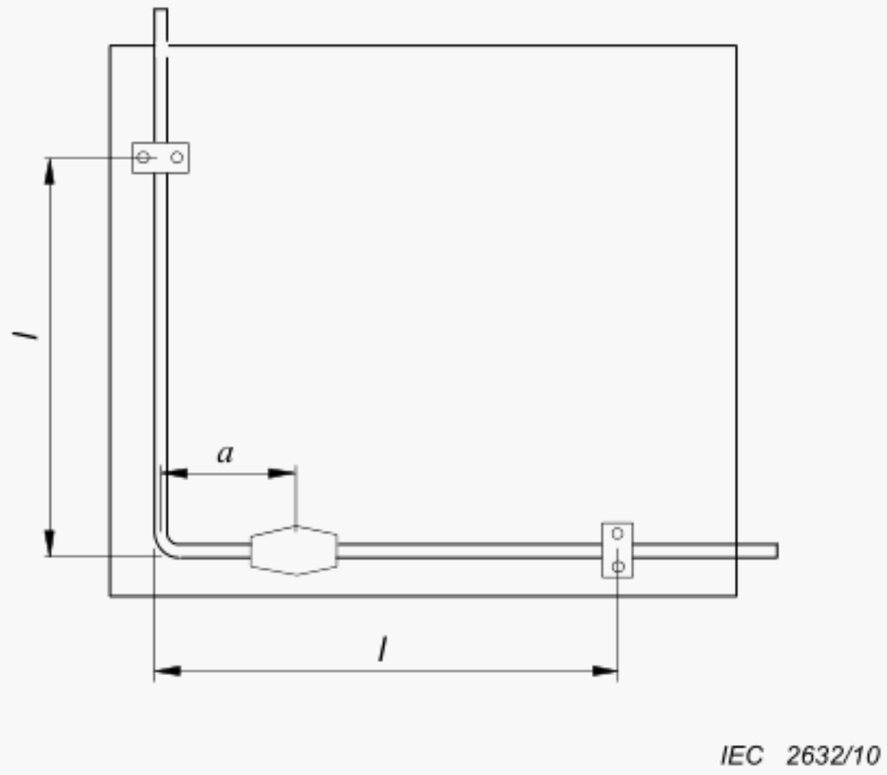

Figure D.2 – Typical conductor arrangement in an LPS

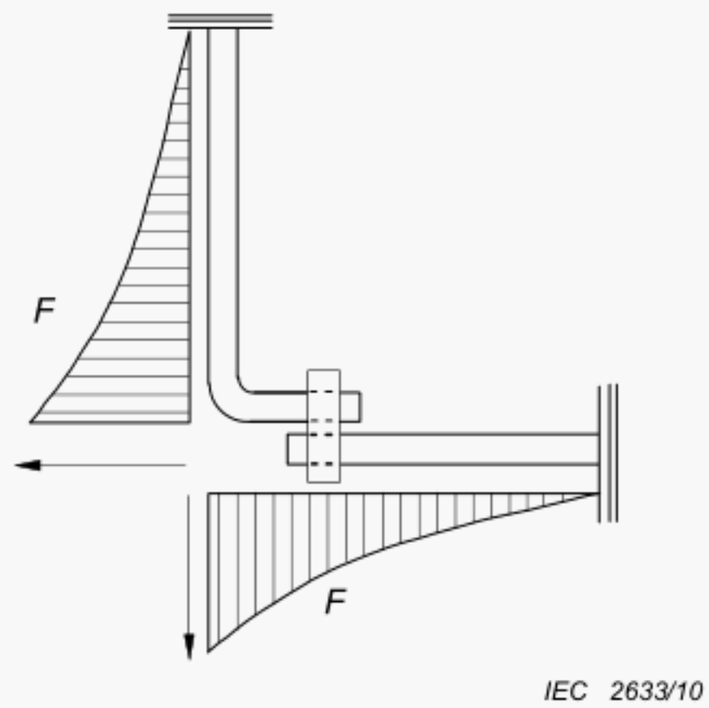

Figure D.3 – Diagram of the stresses *F* for the configuration of Figure D.2

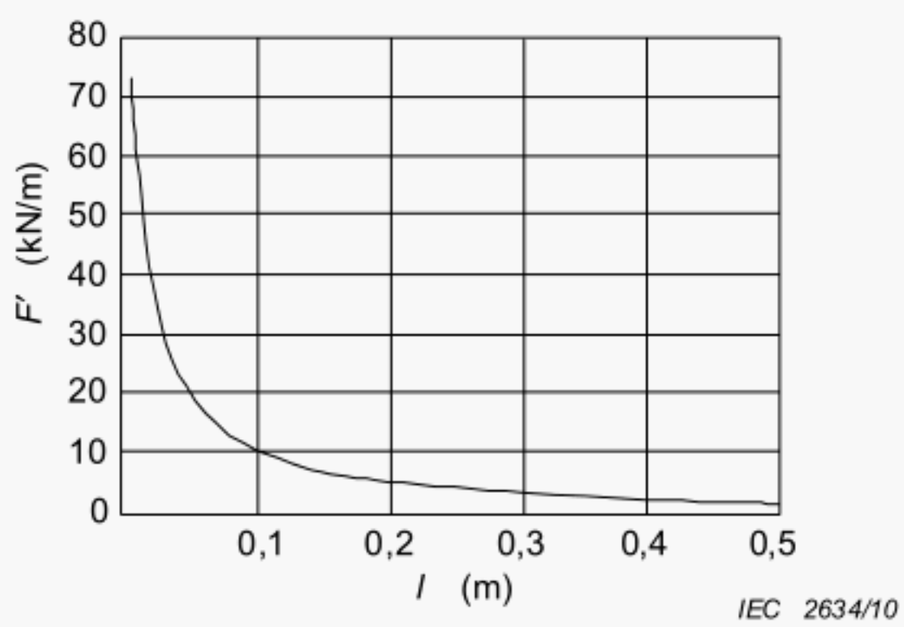

NOTE The peak current value is 100 kA and the length of the vertical conductor is 0,5 m.

Figure D.4 – Force per unit length *F'* along the horizontal conductor of Figure D.2

D.4.2.1.2 Effects of electrodynamic forces

In terms of amplitude of applied force, the instantaneous value of the electrodynamic force $F(t)$ is proportional to the square of the instantaneous current $i(t)^2$. In terms of the stress development within the mechanical LPS structure, expressed by the product of the elastic deformation $\delta(t)$ and the elastic constant k of the LPS structure, two effects should be considered. The natural mechanical frequency (linked with the elastic behaviour of the LPS structure) and the permanent deformation of the LPS structure (linked with its plastic behaviour) are the most important parameters. Moreover, in many cases the effect of the friction forces within the structure are also of significant importance.

The amplitude of the vibrations of the elastic LPS structure, caused by an electrodynamic force developed by the lightning current, can be evaluated by means of second order differential equations; the key factor is the ratio between the duration of the current impulse and the period of natural mechanical oscillation of the LPS structure. The typical condition encountered in LPS applications consists of natural oscillation periods of the structure much longer than that of the applied force (duration of the lightning current impulse). In this case the maximum mechanical stress occurs after the cessation of the current impulse and has a peak value that remains lower than that of the applied force. In most cases, maximum mechanical stress can be neglected.

Plastic deformation occurs when the tensile stress exceeds the elastic limit of the material. If the material composing the LPS structure is soft, for example aluminium or annealed copper, the electrodynamic forces can deform the conductors in corners and loops. LPS components should therefore be designed to withstand these forces and to show essentially an elastic behaviour.

The total mechanical stress applied to the LPS structure depends on the time integral of the applied force and therefore on the specific energy associated with the current impulse. It also depends on the shape of the current impulse and its duration (compared with the period of natural oscillation of the structure). All these influencing parameters must therefore be taken into account during testing.

D.4.2.2 Acoustic shock wave damage

When a lightning current flows in an arc a shock wave is produced. The severity of the shock is dependent upon the peak current value and the rate of rise of the current.

In general, the damage due to the acoustic shock wave is insignificant on metal parts of the LPS but can cause damage to surrounding items.

D.4.3 Combined effects

In practice, both thermal and mechanical effects occur simultaneously. If the heating of the material of the components (rods, clamps, etc.) is sufficient to soften the materials, much greater damage can occur than otherwise. In extreme cases, the conductor could explosively fuse and cause considerable damage to the surrounding structure. If the cross-section of the metal is sufficient to safely handle the overall action, only mechanical integrity need be checked.

D.4.4 Sparking

Sparking is generally important only in flammable environments or in the presence of combustible materials. In most practical cases, sparking is not important for LPS components.

Two different types of sparking can occur, i.e. thermal sparking and voltage sparking. Thermal sparking occurs when a very high current is forced to cross a joint between two conducting materials. Most thermal sparking occur near the edges inside a joint if the interface pressure is too low; this is due primarily to high current density and inadequate interface pressure. The intensity of the thermal sparking is linked to the specific energy and therefore, the most critical phase of the lightning is the first return stroke. Voltage sparking occurs where the current is forced to take convoluted paths, e.g. inside a joint, if the voltage induced in such a loop exceeds the breakdown voltage between the metal parts. The induced voltage is proportional to the self inductance multiplied by the steepness of the lightning current. The most critical lightning component for voltage sparking is therefore the subsequent negative stroke.

D.5 LPS components, relevant problems and test parameters

D.5.1 General

Lightning protection systems are made of several different components, each having a specific function within the system. The nature of the components and the specific stresses to which they are subjected, require special consideration when setting up laboratory tests to check their performance.

D.5.2 Air termination

Effects on air-termination systems arise from both mechanical and thermal effects (as discussed below in D.5.3, but noting that a high proportion of the lightning current will flow in an air-termination conductor which is struck) and also, in some cases, arc erosion effects, particularly in natural LPS components such as thin metal roof or wall skins (where puncture or excessive rear surface temperature rise may occur) and suspended conductors.

For arc erosion effects, two main test parameters should be considered, i.e. the charge of the long duration current and its duration.

The charge governs the energy input at the arc root. In particular, long duration strokes appear to be the most severe for this effect whilst short duration strokes can be neglected.

The duration of the current has an important role in the heat transfer phenomena into the material. The duration of the current applied during the tests should be comparable to those of long duration strokes (0,5 s to 1 s).

D.5.3 Down-conductors

Effects on down-conductors caused by lightning can be divided into two main categories:

– thermal effects due to resistive heating;
– mechanical effects linked with the magnetic interaction where the lightning current is shared by conductors positioned in the vicinity of one another or when the current changes direction (bends or connections between conductors positioned at a given angle with respect to one another).

In most cases, these two effects act independently from each other and separate laboratory tests can be carried out to check each effect from the other. This approach can be adopted in all cases in which the heating developed by the lightning current flow does not modify substantially the mechanical characteristics.

D.5.3.1 Resistive heating

Calculations and measurements relating to the heating of conductors of different cross-sections and materials due to lightning current flowing along a conductor have been published by several authors. The main results in terms of plots and formulae are

summarized in D.4.1.1. No laboratory test is therefore necessary, in general, to check the behaviour of a conductor with respect to temperature rise.

In all cases for which a laboratory test is required, the following considerations shall be taken into account:

– the main test parameters to be considered are the specific energy and the impulse current duration;
– the specific energy governs the temperature rise due to the Joule heating caused by the flow of the lightning current. Numerical values to be considered are those relevant to the first stroke. Conservative data are obtained by considering positive strokes;
– the impulse current duration has a decisive influence on the heat exchange process with respect to the ambient conditions surrounding the considered conductor. In most cases the duration of the impulse current is so short that the heating process can be considered to be adiabatic.

D.5.3.2 Mechanical effects

As discussed in D.4.2.1, mechanical interactions are developed between conductors carrying lightning current. The force is proportional to the product of the currents flowing in the conductors (or to the square of the current if a single bent conductor is considered) and is linked with the inverse of the distance between the conductors.

The usual situation in which a visible effect can occur is when a conductor forms a loop or is bent. When such a conductor carries the lightning current, it will be subjected to a mechanical force which tries to extend the loop and to straighten the corner and thus to bend it outward. The magnitude of this force is proportional to the square of the current amplitude. A clear distinction should be made, however, between the electrodynamic force, which is proportional to the square of the current amplitude, and the corresponding stress dependent on the elastic characteristics of the mechanical LPS structure. For LPS structures of relatively low natural frequencies, the stress developed within the LPS structure would be considerably lower than the electrodynamic force. In this case, no laboratory test is necessary to check the mechanical behaviour of a conductor bent at a right-angle as long as the cross-sectional areas of the present standard requirements are fulfilled.

In all cases for which a laboratory test is required (especially for soft materials), the following considerations should be taken into account. Three parameters of the first return stroke are to be considered: the duration, the specific energy of the impulse current and, in the case of rigid systems, the amplitude of the current.

The duration of the impulse current, compared with the period of the natural mechanical oscillation of the LPS structure, governs the type of mechanical response of the system in terms of displacement:

– If the duration of the impulse is much shorter than the period of natural mechanical oscillation of the LPS structure (normal case for LPS structures stressed by lightning impulses), the mass and elasticity of the system prevents it from being displaced appreciably and the relevant mechanical stress is essentially related to the specific energy of the current impulse. The peak value of the impulse current has a limited effect.
– If the duration of the impulse is comparable with or higher than the period of natural mechanical oscillation of the structure, the displacement of the system is more sensitive to the shape of the applied stress. In this case, the peak value of the current impulse and its specific energy needs to be reproduced during the test.

The specific energy of the impulse current governs the stress causing the elastic and plastic deformation of the LPS structure. Numerical values to be considered are those relevant to the first stroke.

The maximum values of the impulse current govern the length of the maximum displacement of the LPS structure, in case of rigid systems having high natural oscillation frequencies. Numerical values to be considered are those relevant to the first stroke.

D.5.3.3 Connecting components

Connecting components between adjacent conductors of an LPS are possible points of mechanical and thermal weakness where very high stresses occur.

In the case of a connector placed in such a manner as to make the conductor follow a right angle, the main effects of the stresses are linked with mechanical forces which tend to straighten the conductor set and overcome the friction forces between the connecting component and the conductors, thus pulling the connection apart. The development of arcs at the points of contact of the different parts is possible. Moreover, the heating effect caused by the concentration of current over small contact surfaces has a notable effect.

Laboratory tests have shown that it is difficult to separate each effect from the others as a complex synergism takes place. Mechanical strength is affected by local melting of the area of contact. Relative displacements between parts of the connection components promote the development of arcs and the consequential intense heat generation.

In the absence of a valid model, laboratory tests should be conducted in such a way as to represent as closely as possible the appropriate parameters of the lightning current in the most critical situation, i.e. the appropriate parameters of the lightning current shall be applied by means of a single electrical test.

Three parameters should be considered in this case: the peak value, the specific energy and the duration of the impulse current.

The maximum values of the impulse current govern the maximum force, or, if and after the electrodynamic pulling force exceeds the friction force, the length of the maximum displacement of the LPS structure. Numerical values to be considered are those relevant to the first stroke. Conservative data are obtained by considering positive strokes.

The specific energy of the current impulse governs the heating at contact surfaces where the current is concentrated over small areas. Numerical values to be considered are those relevant to the first stroke. Conservative data are obtained by considering positive strokes.

The duration of the impulse current governs the maximum displacement of the structure after friction forces are exceeded and has an important role in the heat transfer phenomena into the material.

D.5.3.4 Earth-termination

The real problems with earth-termination electrodes are linked with chemical corrosion and mechanical damage caused by forces other than electrodynamic forces. In practical cases, erosion of the earth electrode at the arc root is of minor importance. It is, however, to be considered that, contrary to air-terminations, a typical LPS has several earth-terminations. The lightning current will be shared between several earthing electrodes, thus causing less important effects at the arc root. Two main test parameters should be considered in this case:

– the charge governs the energy input at the arc root. In particular, the contribution of the first stroke can be neglected since long duration strokes appear to be the most severe for this component;
– the duration of the current impulse has an important role in the heat transfer phenomena into the material. The duration of the current impulses applied during the testing should be comparable to those of long duration strokes (0,5 s to 1s).

D.6 Surge protective device (SPD)

D.6.1 General

The effects of the stress on an SPD caused by lightning depend on the type of SPD considered, with particular reference to the presence or absence of a gap.

D.6.2 SPD containing spark gaps

Effects on spark gaps caused by lightning can be divided into two major categories:

– the erosion of the gap electrodes by heating, melting and vaporizing of material;
– the mechanical stress caused by the shock wave of the discharge.

It is extremely difficult to investigate separately these effects, as both are linked with the main lightning current parameters by means of complex relationships.

For spark gaps, laboratory tests shall be conducted in such a way as to represent as closely as possible the appropriate parameters of the lightning current in the most critical situation, i.e. all the appropriate parameters of the lightning current shall be applied by means of a single electrical stress.

Five parameters shall be considered in this case: the peak value, the charge, the duration, the specific energy and the rate of rise of the impulse current.

The current peak value governs the severity of the shockwave. Numerical values to be considered are those relevant to the first stroke. Conservative data are obtained by considering positive strokes.

The charge governs the energy input in the arc. The energy in the arc will heat up, melt and possibly vaporize part of the electrode material at the attachment point of the arc. Numerical values to be considered are those relevant to the whole lightning flash. However, the charge of the long duration current can be neglected in many cases, depending on the configuration of the power supply system (TN, TT or IT).

The duration of the impulse current governs the heat transfer phenomena into the mass of the electrode and the resulting propagation of the melt front.

The specific energy of the current impulse governs the self-magnetic compression of the arc and the physics of the electrode plasma jets developed at the interface between the electrode surface and the arc (which can blow out a significant amount of molten material). Numerical values to be considered are those relevant to the first stroke. Conservative data are obtained by considering positive strokes.

NOTE For spark gaps used on power supply systems, the possible power frequency follow current amplitude constitutes an important stress factor, which must be taken into consideration.

D.6.3 SPD containing metal-oxide varistors

Stress to metal-oxide varistors caused by lightning can be divided into two main categories: overload and flashover. Each category is characterized by failure modes generated by different phenomena and governed by different parameters. The failure of a metal-oxide SPD is linked with its weakest characteristics and therefore it is unlikely that synergism between different fatal stresses can occur. It appears, therefore, to be acceptable to carry out separate tests to check the behaviour under each failure mode condition.

Overloads are caused by an amount of absorbed energy exceeding the capabilities of the device. The excessive energy considered here is related to the lightning stress itself.

However, for SPDs installed on power supply systems, the follow current injected in the device by the power system immediately after the cessation of the lightning current flow can also play an important role in the fatal damage of the SPD. Finally, an SPD can be fatally damaged by thermal instability under the applied voltage related to the negative temperature coefficient of the volt-ampere characteristics of the resistors. For the overload simulation of metal-oxide varistors, one main parameter is to be considered: the charge.

The charge governs the energy input into the metal-oxide resistor block, considering as a constant the residual voltage of the metal-oxide resistor block. Numerical values to be considered are those relevant to the lightning flash.

Flashovers and cracking are caused by the amplitude of current impulses exceeding the capabilities of the resistors. This failure mode is generally evidenced by an external flashover along the collar, sometimes penetrating into the resistor block causing a crack or a hole perpendicular to the collar. The failure is mainly linked with a dielectric collapse of the collar of the resistor block.

For the simulation of this lightning phenomenon, two main parameters should be considered: the maximum value and the duration of the impulse current.

The maximum value of the impulse current determines, through the corresponding level of residual voltage, whether the maximum dielectric strength on the resistor collar is exceeded. Numerical values to be considered are those relevant to the first stroke. Conservative data are obtained by considering positive strokes.

The duration of the impulse current governs the duration of application of the dielectric stress on the resistor collar.

D.7 Summary of the test parameters to be adopted in testing LPS components

Table D.1 summarizes the most critical aspects of each LPS component during the performance of its function and gives the parameters of the lightning current to be reproduced in laboratory tests.

The numerical values given in Table D.1 are relevant to the lightning parameters of importance at the point of strike.

Test values should be calculated considering the current sharing which can be expressed by means of the current sharing factor, as discussed in Clause D.3.

The numerical values of the parameters to be used during the tests can therefore be calculated on the base of the data given in Table D.1, applying the reduction factors linked with current sharing, as expressed by the formulae reported in Clause D.3.

Annex E
(informative)

Surges due to lightning at different installation points

E.1 Overview

For dimensioning of conductors, SPDs and apparatus, the threat due to surges at the particular installation point of these components should be determined. Surges can arise from (partial) lightning currents and from induction effects into installation loops. The threat due to these surges must be lower than the withstand levels of the components used (defined by adequate tests as necessary).

E.2 Surges due to flashes to the structure (source of damage S1)

E.2.1 Surges flowing through external conductive parts and lines connected to the structure

When conducted to earth, the lightning current is divided between the earth-termination system, the external conductive parts and the lines, directly or via SPDs connected to them.

If

$$I_F = k_e \times I \tag{E.1}$$

is the part of the lightning current relevant to each external conductive part or line, then the current sharing factor k_e depends on:

– the number of parallel paths;
– their conventional earthing impedance for underground parts, or their earth resistance, where overhead parts connect to underground, for overhead parts;
– the conventional earthing impedance of the earth-termination system.

- for underground installation $$k_e = \frac{Z}{Z_1 + Z \times (n_1 + n_2 \times \frac{Z_1}{Z_2})} \tag{E.2}$$

- for overhead installation $$k_e = \frac{Z}{Z_2 + Z \times (n_2 + n_1 \times \frac{Z_2}{Z_1})} \tag{E.3}$$

where

Z is the conventional earthing impedance of the earth-termination system;

Z_1 is the conventional earthing impedance of the external parts or lines (Table E.1) running underground;

Z_2 is the earth resistance of the earthing arrangement connecting the overhead line to ground. If the earth resistance of the earthing point is not known, the value of Z_1 shown in Table E.1 may be used (where the resistivity is relevant to the earthing point).

NOTE 1 This value is assumed in the above formula to be the same for each earthing point. If this is not the case, more complex equations need to be used.

n_1 is the overall number of external parts or lines running underground;

n_2 is the overall number of external parts or lines running overhead;

I is the lightning current relevant to the lightning protection level (LPL) considered.

Assuming as a first approximation that one half of the lightning current flows in the earth-termination system and that $Z_2 = Z_1$, the value of k_e may be evaluated for an external conductive part or line by:

$$k_e = 0{,}5 / (n_1 + n_2) \quad \text{(E.4)}$$

If entering lines (e.g. electrical and telecommunication lines) are unshielded or not routed in metal conduit, each of the n' conductors of the line carries an equal part of the lightning current

$$k'_e = k_e / n' \quad \text{(E.5)}$$

n' being the total number of conductors.

For shielded lines bonded at the entrance, the values of current sharing factor k'_e for each of the n' conductors of a shielded line are given by:

$$k'_e = k_e \times R_S / (n' \times R_S + R_C) \quad \text{(E.6)}$$

where

R_S is the ohmic resistance per unit length of shield;

R_C is the ohmic resistance per unit length of inner conductor.

NOTE 2 This formula may underestimate the role of the shield in diverting lightning current due to mutual inductance between core and shield.

Table E.1 – Conventional earthing impedance values Z and Z_1 according to the resistivity of the soil

ρ Ωm	Z_1 [a] Ω	Conventional earthing impedance related to the type of LPS [b] Z Ω		
		I	II	III – IV
≤100	8	4	4	4
200	11	6	6	6
500	16	10	10	10
1 000	22	10	15	20
2 000	28	10	15	40
3 000	35	10	15	60

NOTE Values reported in this table refer to the conventional earthing impedance of a buried conductor under impulse condition (10/350 µs).

[a] Values referred to external parts length over 100 m. For length of external parts lower than 100 m in high resistivity soil (> 500 Ωm) values of Z_1 could be doubled.

[b] Earthing system complying with 5.4 of IEC 62305-3:2010.

E.2.2 Factors influencing the sharing of the lightning current in power lines

For detailed calculations, several factors can influence the amplitude and the shape of such surges:

- the cable length can influence current sharing and shape characteristics due to the *L/R* ratio;
- different impedances of neutral and phase conductors can influence current sharing among line conductors;

NOTE 1 For example, if the neutral (N) conductor has multiple earths, the lower impedance of N compared with phase conductors L_1, L_2, and L_3 could result in 50 % of the current flowing through the N conductor with the remaining 50 % being shared by the other 3 phase conductors (17 % each). If N, L_1, L_2, and L_3 have the same impedance, each conductor will carry approximately 25 % of the current.

- different transformer impedances can influence current sharing (this effect is negligible, if the transformer is protected by SPDs bypassing its impedance);
- the relation between the conventional earthing resistances of the transformer and the items on the load side can influence current sharing (the lower the transformer impedance, the higher is the surge current flowing into the low voltage system);
- parallel consumers cause a reduction of the effective impedance of the low voltage system; this may increase the partial lightning current flowing into this system.

NOTE 2 Refer to Annex D of IEC 62305-4:2010 for more information.

E.3 Surges relevant to lines connected to the structure

E.3.1 Surges due to flashes to lines (source of damage S3)

For direct lightning flashes to connected lines, partitioning of the lightning current in both directions of the line and the breakdown of insulation should be taken into account.

The selection of the I_{imp} value can be based on values given in Tables E.2 and E.3 for low-voltage systems and Table E.3 for telecommunication systems where the preferred values of I_{imp} are associated with the lightning protection level (LPL).

Table E.2 – Expected surge overcurrents due to lightning flashes on low-voltage systems

LPL (class)	Low-voltage systems			
	Direct and indirect flashes to the service		Flash near the structure[a]	Flash to the structure[a]
	Source of damage S3 (direct flash)[b] Current shape: 10/350 µs kA	Source of damage S4 (indirect flash)[c] Current shape: 8/20 µs kA	Source of damage S2 (induced current) Current shape:[d] 8/20 µs kA	Source of damage S1 (induced current) Current shape:[d] 8/20 µs kA
III - IV	5	2,5	0,1	5
II	7,5	3,75	0,15	7,5
I	10	5	0,2	10

NOTE All values refer to each line conductor.

[a] Loop conductors routing and distance from inducing current affect the values of expected surge overcurrents. Values in Table E.2 refer to short-circuited, unshielded loop conductors with different routing in large buildings (loop area in the order of 50 m^2, width = 5 m), 1 m apart from the structure wall, inside an unshielded structure or building with LPS (k_c = 0,5). For other loop and structure characteristics, values should be multiplied by factors K_{S1}, K_{S2}, K_{S3} (see Clause B.4 of IEC 62305-2:2010).

[b] Values relevant to the case of the strike to the last pole of the line close to the consumer and multiconductor (three phase + neutral) line.

[c] Values referred to overhead lines. For buried lines values can be halved.

[d] Loop inductance and resistance affect the shape of the induced current. Where the loop resistance is negligible, the shape 10/350 µs should be assumed. This is the case where a switching type SPD is installed in the induced circuit.

Table E.3 – Expected surge overcurrents due to lightning flashes on telecommunication systems

LPL (class)	Telecommunication systems[a]			
	Direct and indirect flashes to the service		Flash near the structure[b]	Flash to the structure[b]
	Source of damage S3 (direct flash)[c] Current shape: 10/350 µs kA	Source of damage S4 (indirect flash)[d] Current shape: 8/20 µs kA	Source of damage S2 (induced current) Current shape 8/20 µs kA	Source of damage S1 (induced current) Current shape: 8/20µs kA
III - IV	1	0,035	0,1	5
II	1,5	0,085	0,15	7,5
I	2	0,160	0,2	10

NOTE All values refer to each line conductor.

[a] Refer to ITU-T Recommendation K.67 [6] for more information.

[b] Loop conductors routing and distance from inducing current affect the values of expected surge overcurrents. Values in Table E.3 refer to short-circuited, unshielded loop conductors with different routing in large buildings (loop area in the order of 50 m^2, width = 5 m), 1 m apart from the structure wall, inside an unshielded structure or building with LPS (k_c = 0,5). For other loop and structure characteristics, values should be multiplied by factors K_{S1}, K_{S2}, K_{S3} (see Clause B.4 of IEC 62305-2:2010).

[c] Values referred to unshielded lines with many pairs. For an unshielded drop wire, values could be 5 times higher.

[d] Values referred to overhead unshielded lines. For buried lines values can be halved.

For shielded lines, the values of the overcurrents given in Table E.2 can be reduced by a factor of 0,5.

NOTE It is assumed that the resistance of the shield is approximately equal to the resistance of all line conductors in parallel.

E.3.2 Surges due to flashes near the lines (source of damage S4)

Surges from flashes near lines have energies much lower than those associated with flashes to lines (source of damage S3).

Expected overcurrents, associated with a specific lightning protection level (LPL) are given in Tables E.2 and E.3.

For shielded lines the values of overcurrents given in Tables E.2 and E.3 can be reduced by a factor 0,5.

E.4 Surges due to induction effects (source of damage S1 or S2)

E.4.1 General

Surges due to induction effects from magnetic fields, generated either from nearby lightning flashes (source S2) or from lightning current flowing in the external LPS or the spatial shield of LPZ 1 (source S1) have a typical current shape of 8/20 µs. Such surges are to be considered close to or at the terminal of apparatus inside LPZ 1 and at the boundary of LPZ 1/2.

E.4.2 Surges inside an unshielded LPZ 1

Inside an unshielded LPZ 1 (e.g. protected only by an external LPS according to IEC 62305-3 with mesh width greater than 5 m) relatively high surges are to be expected due to the induction effects from the undamped magnetic field.

Expected overcurrents, associated with a specific lightning protection level (LPL) are given in Tables E.2 and E.3.

E.4.3 Surges inside shielded LPZs

Inside LPZs with effective spatial shielding (requiring mesh width below 5 m according to Annex A of IEC 62305-4:2011), the generation of surges due to induction effects from magnetic fields is strongly reduced. In such cases the surges are much lower than those given in E.4.2.

Inside LPZ 1 the induction effects are lower due to the damping effect of its spatial shield.

Inside LPZ 2 the surges are further reduced due to the cascaded effect of both spatial shields of LPZ 1 and LPZ 2.

E.5 General information relating to SPDs

The use of SPDs depends on their withstand capability, classified in IEC 61643-1[7] for power and in IEC 61643-21[8] for telecommunication systems.

SPDs to be used according to their installation position are as follows:

a) At the line entrance into the structure (at the boundary of LPZ 1, e.g. at the main distribution board MB):
   - SPD tested with I_{imp} (typical current shape 10/350), e.g. SPD tested according to Class I;
   - SPD tested with I_n (typical current shape 8/20), e.g. SPD tested according to Class II.

b) Close to the apparatus to be protected (at the boundary of LPZ 2 and higher, e.g. at a secondary distribution board SB, or at a socket outlet SA):
   - SPD tested with I_{imp} (typical current shape 10/350), e.g. SPD tested according to Class I for power SPDs);
   - SPD tested with I_n (typical current shape 8/20), e.g. SPD tested according to Class II);
   - SPD tested with a combination wave (typical current current shape 8/20), e.g. SPD tested according to Class III.

Bibliography

[1] IEC 60664-1:2007, *Insulation coordination for equipment within low-voltage systems – Part 1: Principles, requirements and tests*

[2] IEC 61000-4-5, *Electromagnetic compatibility (EMC) – Part 4-5: Testing and measurement techniques – Surge immunity test*

[3] BERGER K., ANDERSON R.B., KRÖNINGER H., *Parameters of lightning flashes.* CIGRE Electra No 41 (1975), p. 23 – 37

[4] ANDERSON R.B., ERIKSSON A.J., *Lightning parameters for engineering application*. CIGRE Electra No 69 (1980), p. 65 – 102

[5] IEEE working group report, *Estimating lightning performance of transmission lines-Analytical models*. IEEE Transactions on Power Delivery, Volume 8, n. 3, July 1993

[6] ITU-T Recommendation K.67, *Expected surges on telecommunications and signalling networks due to lightning*

[7] IEC 61643-1, *Low-voltage surge protective devices – Part 1: Surge protective devices connected to low-voltage power distribution systems – Requirements and tests*

[8] IEC 61643-21 *Low-voltage surge protective devices – Part 21: Surge protective devices connected to telecommunications and signalling networks – Performance requirements and testing methods*

This page deliberately left blank

This page deliberately left blank

NO COPYING WITHOUT BSI PERMISSION EXCEPT AS PERMITTED BY COPYRIGHT LAW

About us

We bring together business, industry, government, consumers, innovators and others to shape their combined experience and expertise into standards -based solutions.

The knowledge embodied in our standards has been carefully assembled in a dependable format and refined through our open consultation process. Organizations of all sizes and across all sectors choose standards to help them achieve their goals.

Information on standards

We can provide you with the knowledge that your organization needs to succeed. Find out more about British Standards by visiting our website at bsigroup.com/standards or contacting our Customer Services team or Knowledge Centre.

Buying standards

You can buy and download PDF versions of BSI publications, including British and adopted European and international standards, through our website at bsigroup.com/shop, where hard copies can also be purchased.

If you need international and foreign standards from other Standards Development Organizations, hard copies can be ordered from our Customer Services team.

Copyright in BSI publications

All the content in BSI publications, including British Standards, is the property of and copyrighted by BSI or some person or entity that owns copyright in the information used (such as the international standardization bodies) and has formally licensed such information to BSI for commercial publication and use.

Save for the provisions below, you may not transfer, share or disseminate any portion of the standard to any other person. You may not adapt, distribute, commercially exploit, or publicly display the standard or any portion thereof in any manner whatsoever without BSI's prior written consent.

Storing and using standards

Standards purchased in soft copy format:

- A British Standard purchased in soft copy format is licensed to a sole named user for personal or internal company use only.
- The standard may be stored on more than 1 device provided that it is accessible by the sole named user only and that only 1 copy is accessed at any one time.
- A single paper copy may be printed for personal or internal company use only.

Standards purchased in hard copy format:

- A British Standard purchased in hard copy format is for personal or internal company use only.
- It may not be further reproduced – in any format – to create an additional copy. This includes scanning of the document.

If you need more than 1 copy of the document, or if you wish to share the document on an internal network, you can save money by choosing a subscription product (see 'Subscriptions').

Reproducing extracts

For permission to reproduce content from BSI publications contact the BSI Copyright & Licensing team.

Subscriptions

Our range of subscription services are designed to make using standards easier for you. For further information on our subscription products go to bsigroup.com/subscriptions.

With **British Standards Online (BSOL)** you'll have instant access to over 55,000 British and adopted European and international standards from your desktop. It's available 24/7 and is refreshed daily so you'll always be up to date.

You can keep in touch with standards developments and receive substantial discounts on the purchase price of standards, both in single copy and subscription format, by becoming a **BSI Subscribing Member**.

PLUS is an updating service exclusive to BSI Subscribing Members. You will automatically receive the latest hard copy of your standards when they're revised or replaced.

To find out more about becoming a BSI Subscribing Member and the benefits of membership, please visit bsigroup.com/shop.

With a **Multi-User Network Licence (MUNL)** you are able to host standards publications on your intranet. Licences can cover as few or as many users as you wish. With updates supplied as soon as they're available, you can be sure your documentation is current. For further information, email subscriptions@bsigroup.com.

Revisions

Our British Standards and other publications are updated by amendment or revision.

We continually improve the quality of our products and services to benefit your business. If you find an inaccuracy or ambiguity within a British Standard or other BSI publication please inform the Knowledge Centre.

Useful Contacts

Customer Services
Tel: +44 345 086 9001
Email (orders): orders@bsigroup.com
Email (enquiries): cservices@bsigroup.com

Subscriptions
Tel: +44 345 086 9001
Email: subscriptions@bsigroup.com

Knowledge Centre
Tel: +44 20 8996 7004
Email: knowledgecentre@bsigroup.com

Copyright & Licensing
Tel: +44 20 8996 7070
Email: copyright@bsigroup.com

BSI Group Headquarters

389 Chiswick High Road London W4 4AL UK

bsi.