BS EN ISO 13736:2013
BS 2000-170:2013

BSI Standards Publication

Determination of flash point — Abel closed-cup method (ISO 13736:2013)

bsi.

...making excellence a habit.™

National foreword

This British Standard is the UK implementation of EN ISO 13736:2013. It supersedes BS EN ISO 13736:2008 which is withdrawn.

The UK participation in its preparation was entrusted to Technical Committee PTI/13, Petroleum Testing and Terminology.

A list of organizations represented on this committee can be obtained on request to its secretary.

Energy Institute, under the brand of IP, publishes and sells all Parts of BS 2000, and all BS EN petroleum test methods that would be Part of BS 2000, both in its annual publication “Standard methods for analysis and testing of petroleum and related products and British Standard 2000 Parts” and individually.

Further information is available from:

Energy Institute, 61 New Cavendish Street, London W1G 7AR.

Tel: 020 7467 7100. Fax: 020 7255 1472.

This publication does not purport to include all the necessary provisions of a contract. Users are responsible for its correct application.

© The British Standards Institution 2013. Published by BSI Standards Limited 2013

ISBN 978 0 580 70089 7

ICS 75.080

Compliance with a British Standard cannot confer immunity from legal obligations.

This British Standard was published under the authority of the Standards Policy and Strategy Committee on 30 April 2013.

Amendments issued since publication

Date	Text affected

EUROPEAN STANDARD
NORME EUROPÉENNE
EUROPÄISCHE NORM

EN ISO 13736

April 2013

ICS 75.080

Supersedes EN ISO 13736:2008

English Version

Determination of flash point - Abel closed-cup method (ISO 13736:2013)

Détermination du point d'éclair - Méthode Abel en vase clos (ISO 13736:2013)

Bestimmung des Flammpunktes - Verfahren mit geschlossenem Tiegel nach Abel (ISO 13736:2013)

This European Standard was approved by CEN on 9 February 2013.

CEN members are bound to comply with the CEN/CENELEC Internal Regulations which stipulate the conditions for giving this European Standard the status of a national standard without any alteration. Up-to-date lists and bibliographical references concerning such national standards may be obtained on application to the CEN-CENELEC Management Centre or to any CEN member.

This European Standard exists in three official versions (English, French, German). A version in any other language made by translation under the responsibility of a CEN member into its own language and notified to the CEN-CENELEC Management Centre has the same status as the official versions.

CEN members are the national standards bodies of Austria, Belgium, Bulgaria, Croatia, Cyprus, Czech Republic, Denmark, Estonia, Finland, Former Yugoslav Republic of Macedonia, France, Germany, Greece, Hungary, Iceland, Ireland, Italy, Latvia, Lithuania, Luxembourg, Malta, Netherlands, Norway, Poland, Portugal, Romania, Slovakia, Slovenia, Spain, Sweden, Switzerland, Turkey and United Kingdom.

EUROPEAN COMMITTEE FOR STANDARDIZATION
COMITÉ EUROPÉEN DE NORMALISATION
EUROPÄISCHES KOMITEE FÜR NORMUNG

Management Centre: Avenue Marnix 17, B-1000 Brussels

© 2013 CEN All rights of exploitation in any form and by any means reserved worldwide for CEN national Members.

Ref. No. EN ISO 13736:2013: E

Foreword

This document (EN ISO 13736:2013) has been prepared by Technical Committee ISO/TC 28 "Petroleum products and lubricants" in collaboration Technical Committee CEN/TC 19 “Gaseous and liquid fuels, lubricants and related products of petroleum, synthetic and biological origin” the secretariat of which is held by NEN.

This European Standard shall be given the status of a national standard, either by publication of an identical text or by endorsement, at the latest by October 2013, and conflicting national standards shall be withdrawn at the latest by October 2013.

Attention is drawn to the possibility that some of the elements of this document may be the subject of patent rights. CEN [and/or CENELEC] shall not be held responsible for identifying any or all such patent rights.

This document supersedes EN ISO 13736:2008.

According to the CEN-CENELEC Internal Regulations, the national standards organizations of the following countries are bound to implement this European Standard: Austria, Belgium, Bulgaria, Croatia, Cyprus, Czech Republic, Denmark, Estonia, Finland, Former Yugoslav Republic of Macedonia, France, Germany, Greece, Hungary, Iceland, Ireland, Italy, Latvia, Lithuania, Luxembourg, Malta, Netherlands, Norway, Poland, Portugal, Romania, Slovakia, Slovenia, Spain, Sweden, Switzerland, Turkey and the United Kingdom.

Endorsement notice

The text of ISO 13736:2013 has been approved by CEN as EN ISO 13736:2013 without any modification.

Contents

Page

Foreword ..... **iv**
Introduction ..... **v**
1 Scope **1**
2 Normative references **1**
3 Terms and definitions **1**
4 Principle **1**
5 Chemicals and materials **2**
6 Apparatus **2**
7 Apparatus preparation **3**
7.1 Location of the apparatus 3
7.2 Cleaning the test cup 3
7.3 Apparatus examination 3
7.4 Heating/cooling 3
7.5 Apparatus verification 4
8 Sampling **4**
9 Sample handling **4**
9.1 General 4
9.2 Storage prior to testing 4
9.3 Sample preparation 4
10 Procedure **5**
11 Calculation **6**
12 Expression of results **6**
13 Precision **6**
13.1 General 6
13.2 Repeatability, *r* 7
13.3 Reproducibility, *R* 7
14 Test report **7**
Annex A (normative) **Abel flash point apparatus** **8**
Annex B (normative) **Positioning and fixing of test cup and heating vessel thermometers into thermometer collar** **16**
Annex C (normative) **Thermometer specifications** **18**
Annex D (informative) **Apparatus verification** **20**
Bibliography **23**

© ISO 2013 – All rights reserved

Foreword

ISO (the International Organization for Standardization) is a worldwide federation of national standards bodies (ISO member bodies). The work of preparing International Standards is normally carried out through ISO technical committees. Each member body interested in a subject for which a technical committee has been established has the right to be represented on that committee. International organizations, governmental and non-governmental, in liaison with ISO, also take part in the work. ISO collaborates closely with the International Electrotechnical Commission (IEC) on all matters of electrotechnical standardization.

The procedures used to develop this document and those intended for its further maintenance are described in the ISO/IEC Directives, Part 1. In particular the different approval criteria needed for the different types of ISO documents should be noted. This document was drafted in accordance with the editorial rules of the ISO/IEC Directives, Part 2. www.iso.org/directives

Attention is drawn to the possibility that some of the elements of this document may be the subject of patent rights. ISO shall not be held responsible for identifying any or all such patent rights. Details of any patent rights identified during the development of the document will be in the Introduction and/or on the ISO list of patent declarations received. www.iso.org/patents

Any trade name used in this document is information given for the convenience of users and does not constitute an endorsement.

The committee responsible for this document is ISO/TC 28, *Petroleum products and lubricants*.

This third edition cancels and replaces the second edition (ISO 13736:2008), which has been technically revised.

© ISO 2013 – All rights reserved

Introduction

Flash point values can be used in shipping, storage, handling and safety regulations, as a classification property to define “flammable” and “combustible” materials. Precise definition of the classes is given in each particular regulation.

A flash point value can indicate the presence of highly volatile material(s) in a relatively non-volatile or non-flammable material, and flash point testing can be a preliminary step to other investigations into the composition of unknown materials.

Flash point determinations are not appropriate for potentially unstable, decomposable, or explosive materials, unless previously established that heating the specified quantity of such materials in contact with the metallic components of the flash point apparatus, within the temperature range required for the method, does not induce decomposition, explosion or other adverse effects.

Flash point values are not a constant physical-chemical property of materials tested. They are a function of the apparatus design, the condition of the apparatus used, and the operational procedure carried out. Flash point can therefore be defined only in terms of a standard test method, and no general valid correlation can be guaranteed between results obtained by different test methods or with test apparatus different from that specified.

ISO/TR 29662[1] (CEN/TR 15138[2]) gives useful advice on carrying out flash point tests and interpreting results.

© ISO 2013 – All rights reserved

Determination of flash point — Abel closed-cup method

CAUTION — The use of this International Standard can involve hazardous materials and equipment. This International Standard does not purport to address all of the safety problems associated with its use. It is the responsibility of the user of this International Standard to establish appropriate safety and health practices and determine the applicability of regulatory limitations prior to use.

1 Scope

This International Standard specifies a method for the determination of the manual and automated closed-cup flash point of combustible liquids having flash points between −30,0 °C to 75,0 °C . However, the precision given for this method is only valid for flash points in the range −8,5 °C to 75,0 °C.

This International Standard is not applicable to water-borne paints.

NOTE 1 Water-borne paints can be tested using ISO 3679.[3]

NOTE 2 See 9.1 for the importance of this test in avoiding loss of volatile materials.

NOTE 3 Liquids containing halogenated compounds can give anomalous results.

NOTE 4 The thermometer specified for the manual apparatus limits the upper test temperature to 70,0 °C.

2 Normative references

The following referenced documents, in whole or in part, are normatively referenced in this document and are indispensable for its application. For dated references, only the edition cited applies. For undated references, the latest edition of the referenced document (including any amendments) applies.

ISO 3170, *Petroleum liquids — Manual sampling*

ISO 3171, *Petroleum liquids — Automatic pipeline sampling*

ISO 15528, *Paints, varnishes and raw materials for paints and varnishes — Sampling*

3 Terms and definitions

For the purposes of this document, the following terms and definitions apply.

3.1
flash point
lowest temperature of the test portion, corrected to a barometric pressure of 101,3 kPa, at which application of an ignition source causes the vapour of the test portion to ignite and the flame to propagate across the surface of the liquid under the specified conditions of test

4 Principle

The test portion is placed in the test cup of an Abel apparatus and heated to give a constant temperature increase with continuous stirring. An ignition source is directed through an opening in the test cup cover at regular temperature intervals with simultaneous interruption of stirring. The lowest temperature at which application of the ignition source causes the vapours of the test portion to ignite and propagate over the surface of the liquid is recorded as the flash point at the ambient barometric pressure. The temperature is corrected to standard atmospheric pressure using an equation.

© ISO 2013 – All rights reserved

5 Chemicals and materials

5.1 Cleaning solvent, for the removal of traces of sample from the test cup and cover.

NOTE The choice of solvent depends upon the previous material tested, and the tenacity of the residue. Low volatility aromatic (benzene-free) solvents can be used to remove traces of oil, and mixed solvents can be efficacious for the removal of gum-type deposits.

5.2 Coolant, water, ethanediol (ethylene glycol), glycerol or silicone oil (optional), for use in an external cooling bath (6.5) or in the Abel apparatus (see 6.1).

5.3 Lubricant (optional), to reduce the formation of ice crystals on the cover and shutter mechanism when carrying out tests at temperatures below 5,0 °C (see 7.4.3, Note 1).

5.4 Verification liquids, as described in Annex D.

5.5 Ignitor and pilot light gas, which may be propane, butane or natural gas (not required if an electric ignitor is used).

6 Apparatus

6.1 Flash point apparatus, as specified in Annex A.

If automated equipment is used, ensure that the test cup and cover assembly conform to the key dimensions specified in A.2 and that the procedure described in Clause 10 is followed. The user shall ensure that all of the manufacturer's instructions for adjusting and operating the instrument are followed.

In cases of dispute, unless explicitly agreed otherwise, the manual determination of the flash point, using a flame ignition source, shall be considered the reference test.

6.2 Thermometers.

6.2.1 Test cup thermometer, conforming to the specification given in Annex C.

6.2.2 Heating vessel thermometer, conforming to the specification given in Annex C.

NOTE Other types of temperature-measuring device can be used, provided that they meet the requirements for accuracy and have the same response as the thermometers specified in Annex C.

6.3 Timing device, stopwatch or electronic timer with an accuracy better than 5 %.

6.4 Barometer, absolute pressure reading, accurate to 0,5 kPa. Barometers pre-corrected to give sea-level readings, such as those used at weather stations and airports, shall not be used.

6.5 External cooling bath (optional), for assisting in the cooling of the Abel apparatus and test sample (see 7.4.1 and 7.4.2).

6.6 Test cup thermal insulating cap (optional), to reduce the formation of ice crystals on the cup and cover assembly during sub-ambient testing.

© ISO 2013 – All rights reserved

7 Apparatus preparation

7.1 Location of the apparatus

Support the Abel apparatus (6.1) on a level and steady surface in a draught-free position.

NOTE 1 When draughts cannot be avoided, it is good practice to surround the apparatus with a shield.

NOTE 2 When testing materials that produce toxic vapours, the apparatus should be located in a fume hood with an individual control of air flow, adjusted such that vapours can be withdrawn without causing air currents around the test cup during the test.

7.2 Cleaning the test cup

Wash the test cup with an appropriate solvent (5.1) to remove any traces of gum or residue remaining from a previous test. Dry using a stream of clean air to ensure complete removal of the solvent used.

7.3 Apparatus examination

Examine the test cup, the cover and other parts to ensure that they are free from signs of damage and deposits. If any damage is found, either rectify the problem or, if this is not possible, obtain a replacement. If deposits are found remove them.

7.4 Heating/cooling

7.4.1 Liquid baths

Use water or, for less than or near 0 °C bath temperatures, use a mixture of equal volumes of ethanediol (5.2) and water, or glycerol (5.2) and water, or silicone oil, or other suitable liquids, to completely fill the heating vessel and to fill the inner air chamber that surrounds the test cup to a depth of at least 38 mm.

Adjust the temperature of the heating vessel using an external cooling bath (6.5) if required, to at least 9,0 °C below the expected flash or to –35 °C, whichever is the higher.

7.4.2 Solid metal baths

Follow the manufacturers' instructions to adjust the temperature of the bath to at least 9,0 °C below the expected flash point or to –35 °C, whichever is the higher.

7.4.3 Test cup and cover

Loosely assemble the cover and test cup. Adjust their temperature, using an external cooling bath (6.5) or refrigerator if required, to at least 17,0 °C below the expected flash point or to –35 °C, whichever is the higher.

Use the thermal insulating cap (6.6) at lower temperatures.

Ensure that neither cooling liquid nor vapour from the cooling bath, that could affect the flash point of the product under test, enters the test cup.

NOTE 1 Cooling a cover or test cup that is wet with water to below 0 °C can cause sticking due to ice (e.g. sticking of the slide). Wiping the apparatus dry with a duster or a piece of absorbent paper before cooling to below 0 °C is usually sufficient to prevent icing but, alternatively, icing can be minimized by the use of a thermal insulating cap (6.6) and by lubricating the outer face of the lip of the test cup and the slide with a lubricant (5.3).

NOTE 2 A low humidity laboratory environment helps minimize the formation of ice crystals at test temperatures of below 5 °C.

© ISO 2013 – All rights reserved

7.5 Apparatus verification

7.5.1 Verify the correct functioning of the apparatus at least once a year by testing a certified reference material (CRM) (see 5.4 and Annex D). The result obtained shall be equal to or less than $R/\sqrt{2}$ from the certified value of the CRM, where R is the reproducibility of the test. It is recommended that more frequent verification checks be made using secondary working standards (SWS) (5.4).

A recommended procedure for apparatus verification using CRMs and SWSs, and for the production of SWSs, is given in Annex D.

Do not use the numerical values obtained during verification checks to correct subsequent flash point results or provide a bias statement.

7.5.2 Ensure the correct operation of electric hot wire ignition sources, in accordance with the manufacturers' instructions.

8 Sampling

8.1 Obtain samples in accordance with the procedures given in ISO 3170, ISO 3171, ISO 15528 or an equivalent national standard unless otherwise agreed.

8.2 Place sufficient sample volume for testing in a tightly sealed container appropriate to the material being sampled and, for safety purposes, ensure that the sample container is filled to between 85 % and 95 % of its capacity.

8.3 Store the samples in conditions that minimize vapour loss and pressure build-up. Avoid storing the samples at temperatures in excess of 30,0 °C.

9 Sample handling

9.1 General

Since the presence of small proportions of highly volatile materials needs to be detected, this test should be the first determination on a received sample to reduce the loss of these volatile materials.

9.2 Storage prior to testing

If an aliquot of the original sample is to be stored prior to testing, ensure that the container is filled to more than 50 % of its capacity.

NOTE Results of flash point determinations can be affected if the sample volume falls below 50 % of the container's capacity.

9.3 Sample preparation

9.3.1 Sample cooling

Cool the sample to a temperature at least 17,0 °C below the expected flash point or to −35,0 °C, whichever is the higher, before opening the container.

Cool liquids that crystallize on cooling to just above their melting points.

9.3.2 Samples containing undissolved water

If a sample contains water as a separate phase, decant an aliquot from the water prior to mixing.

 © ISO 2013 – All rights reserved

Flash point results can be affected by the presence of water. For certain fuels it is not always possible to decant the sample from the free water. In such cases, the water should be separated from the aliquot physically, prior to mixing, or, if this is not possible, the material should be tested in accordance with ISO 3679.[3]

9.3.3 Sample mixing

Mix samples by gentle manual shaking prior to the removal of the test portion, taking care to minimize the loss of volatile components, and proceed in accordance with Clause 10.

10 Procedure

10.1 Using a barometer (6.4), record the ambient pressure in the vicinity of the apparatus at the time of test.

NOTE It is not necessary to correct the barometric pressure for ambient temperature, although some barometers are designed to make this correction automatically.

10.2 Follow apparatus preparation (see Clause 7) and sample handling (see Clause 9) to adjust the temperature of the Abel bath, cup and cover respectively.

10.3 Place the test cup in position in the apparatus and insert the test cup thermometer (6.2.1). Remove the cover and pour in the test portion without undue agitation, avoiding as far as possible the formation of air bubbles, until the level just reaches the point of the index gauge on the wall of the test cup. The sample can be poured into the test cup before it is placed in position in the apparatus. Place the cover on the test cup and push it down into position. Make any necessary mechanical or electrical connections to the cover and, if a gas ignition source is used, ignite the ignition source flame, adjust its size to conform to the size of the reference bead mounted on the cover of the test cup, and maintain it at that size throughout the test.

A pre-test dip of the ignition source is strongly recommended, before commencing heating of the test portion, as this could indicate the presence of low flash point components. If a flash is detected, discontinue the test, discard the test portion and proceed in accordance with 10.2, commencing the test at a lower expected flash point temperature.

10.4 Apply heat to the heating vessel in such a manner that the temperature of the test portion in the test cup rises at a rate of approximately 1 °C/min from the first application of the ignition source to the end of the test.

See A.2.5 for specific requirements for automated heating vessels.

10.5 Stir the test portion in a clockwise direction (i.e. to give a downward thrust) at 30 r/min ± 5 r/min. Continue stirring in a steady manner for the duration of the test but do not stir during the application of the ignition source.

10.6 When the temperature of the test portion reaches at least 9,0 °C below the expected flash point or −35,0 °C, whichever is the higher, apply the ignition source by slowly and uniformly opening the slide over a period of approximately 2 s and then closing it over a period of approximately 1 s.

10.7 If a flash is detected on this first application of the ignition source, discontinue the test, discard the test portion and proceed in accordance with 10.2, commencing the test at a lower expected flash point temperature. If no flash occurs, proceed in accordance with 10.8. If a flash occurs at a temperature below −30,0 °C, record and report this fact and discontinue the test.

10.8 Apply the ignition source in this manner at every 0,5 °C rise in temperature until a distinct flash is detected in the interior of the test cup.

© ISO 2013 – All rights reserved

10.9 Record, as the detected flash point, the temperature read by the test cup thermometer at the time when the ignition source application causes a distinct flash in the interior of the test cup (see 3.1).

10.10 Do not confuse the true flash point with the bluish halo that sometimes surrounds the ignition source flame at applications preceding the actual flash point.

11 Calculation

11.1 If the barometric pressure reading taken in accordance with 10.1 is in a unit other than kilopascals, convert to kilopascals using the following equations as appropriate:

— reading in hPa × 0,1 = kPa;

— reading in mbar × 0,1 = kPa;

— reading in mmHg × 0,133 322 = kPa.

NOTE For the purposes of correcting flash point values to standard barometric pressure, it is not considered necessary to correct the barometer readings for ambient temperature. However, some barometers are designed to automatically correct the barometric pressure for ambient temperature.

11.2 Calculate the corrected flash point, T_c, using Formula (1):

$$T_c = T_d + 0{,}25(101{,}3 - p) \qquad (1)$$

where

T_d is the detected flash point, expressed in degrees Celsius;

p is the barometric pressure at 0 °C, expressed in kilopascals.

NOTE Formula (1) is strictly correct only within the barometric pressure range from 98,0 kPa to 104,7 kPa. For practical purposes, 4 kPa is equivalent to a flash point temperature change of 1 °C.

12 Expression of results

Report the flash point, corrected to standard atmospheric pressure and rounded to the nearest 0,5 °C.

13 Precision

13.1 General

The precision, as determined by statistical examination of interlaboratory test results in accordance with ISO 4259,[4] for both manual and automated apparatus, is given in 13.2 and 13.3 and applies over the range –8,5 °C to 75,0 °C for automated apparatus and 20,0 °C to 70,0 °C for manual apparatus. The apparatus can be used over a wider temperature range; however, the precision could be affected.

A comparison of precision values between manual apparatus, automated apparatus with gas ignition, and automated apparatus with electric ignition indicated that there was no real difference between the reproducibility estimates. However, repeatability for automated apparatus with electric ignition was found to be slightly greater than the published figure [see Formula (2)]. For practical purposes this difference shall be ignored as it is significantly less than the repeatability of the method.

The evaluation of the degree of agreement between the different apparatus types was performed in accordance with ASTM D6708.[5] No relative bias was found between automated apparatus using gas

 © ISO 2013 – All rights reserved

ignition sources and that using electric ignition sources. However, a small relative bias was evident between manual and automated. For practical purposes this relative bias shall be ignored as it is significantly less than the repeatability of the method.

The IP 170 round robin research report (see BS 2000-170[6]) includes full details of the test programme and statistical evaluations.

13.2 Repeatability, *r*

The difference between two test results, obtained by the same operator with the same apparatus under constant operating conditions on identical test material, would in the long run, in the normal and correct operation of the test method, exceed the value in Formula (2) in only one case in twenty.

$$r = 1{,}4\,°\mathrm{C} \tag{2}$$

13.3 Reproducibility, *R*

The difference between two single and independent test results, obtained by different operators operating in different laboratories on identical test material, would in the long run, in the normal and correct operation of the test method, exceed the value in Formula (3) in only one case in twenty.

$$R = 3{,}2\,°\mathrm{C} \tag{3}$$

14 Test report

The test report shall contain at least the following information:

a) a reference to this International Standard (ISO 13736:2013);

b) the type and complete identification of the sample tested;

c) the ambient barometric pressure in the vicinity of the apparatus (see 10.1 and the Note);

d) the result of the test (see Clause 12);

e) any deviation, by agreement or otherwise, from the procedure specified;

f) the date of the test.

© ISO 2013 – All rights reserved

Annex A
(normative)

Abel flash point apparatus

A.1 Manual apparatus

A.1.1 General

The apparatus shall consist of a test cup, cover assembly and heating vessel as described below and detailed in Figure A.1 and Figure A.2.

A.1.2 Test cup

The test cup shall be made of brass and conform to the form and dimensions shown in Figure A.1.

A gauge, consisting of a rod bent upwards and terminating in a point, shall be fixed within the test cup through the wall, and silver soldered or brazed into place.

A.1.3 Test cup cover assembly

The test cup shall be provided with a close-fitting cover made of brass and conforming to the form and dimensions shown in Figure A.1. A downwardly projecting rim barely reaching the flange on the test cup shall either form part of the top or shall be silver soldered or brazed into place.

Upon the cover shall be mounted a thermometer socket, a bush for the stirrer, trunnions to support a test gas jet, a pair of guides in which a slide moves, and a bead or other reference mark to depict the required 3,6 mm to 4,1 mm size of the ignition source flame. The top of the cover shall be pierced by three rectangular holes symmetrically placed on a diameter, one in the centre and the other two as close as practicable to the inner sides of the rim and opposite each other.

These three holes shall be covered or uncovered by means of a slide moving in guides. The slide shall have two apertures, one corresponding to the centre hole in the cover and the other to one of the holes at the side. The movement of the slide shall be restricted by suitable stops, and its length and the disposition of the holes shall be such that, at the outer extremity of the movement of the slide, the holes in the cover are just completely opened and, at the inner extremity of the movement of the slide, they are completely closed.

The trunnions supporting the test gas jet shall be fixed to the top of the guides and the gas jet shall be mounted in the trunnions so that it is free to oscillate. The test gas jet shall be arranged so that, when the slide is moved to uncover the holes, the oscillating test gas jet is caught by a pin fixed in the slide and tilted over the central hole in such a way that the lower edge of the cover bisects the circle formed by the bore of the jet when in the lowest position. The flame shall then occupy a central position within the hole in both directions.

The thermometer shall be fitted at such an angle as to bring the bulb of the thermometer when in place, vertically below the centre of the cover and at the correct distance from it.

The stirrer shall be mounted on the cover in a position diametrically opposite the thermometer mounting. Its length and the angle at which it is set shall be such that the stirrer rod clears the level gauge and the blades operate below the level of the thermometer bulb and without fouling it.

A.1.4 Stirrer

This shall be made of brass and conform to the form and dimensions given in Figure A.1 b).

© ISO 2013 – All rights reserved

It shall consist of a round stem having four blades. at one end. The blades of the stirrer shall be set so that the liquid is thrust in a downward direction when the stirrer is rotated clockwise.

A.1.5 Heating vessel

This shall be made of copper and conform to the form and dimensions given in Figure A.2. It shall consist of two flat-bottomed cylindrical copper vessels (heating vessel and inner air chamber) placed coaxially one inside the other and soldered at their tops to a flat copper ring that is greater in outside diameter than the smaller vessel. Thus, the space between the two vessels shall be totally enclosed and used as a water jacket.

An ebonite or fibre ring of right-angled section shall be fitted into the hole in the centre of the flat ring to form the top of the heating vessel. When the apparatus is in use, the test cup shall fit into, and its flange rest upon, the ebonite or fibre ring so that the test cup is centrally disposed within the heating vessel. The ebonite or fibre ring shall be secured to avoid metallic contact between the heating vessel and the test cup.

A fitting set vertically shall allow a thermometer to be inserted into the water space. A funnel and overflow pipe shall also be connected with the water space through the top plate and two loop handles provided thereon.

The heating vessel shall have a cylindrical copper jacket.

A.1.6 Heating device

Use any suitable device for heating the vessel, such as gas flame, electric heater or spirit lamp.

A.2 Automated apparatus

A.2.1 General

The apparatus shall consist of a test cup, cover assembly and heating vessel as described below.

A.2.2 Test cup

The test cup shall be made of brass and conform to the key form and dimensions shown in Figure A.1 a).

A gauge, consisting of a rod bent upwards and terminating in a point, shall be fixed within the test cup through the wall, and silver soldered or brazed into place.

A.2.3 Test cup cover assembly

The test cup shall be provided with a close-fitting cover made of brass and conforming to the key form and dimensions shown in Figure A.1 c). A downwardly projecting rim barely reaching the flange on the test cup shall either form part of the top or shall be silver soldered or brazed into place.

Upon the cover shall be mounted a thermometer socket, a stirrer, a flash detector, a pair of guides in which a slide moves and, if a flame ignition source is used, a bead or other reference mark to depict the required 3,6 mm to 4,1 mm size of the flame. The top of the cover shall be pierced by three rectangular holes symmetrically placed on a diameter, one in the centre and the other two as close as practicable to the inner sides of the rim and opposite each other.

These three holes shall be covered or uncovered by means of a slide moving in suitably disposed guides. The slide shall have two apertures, one corresponding to the centre hole in the cover and the other to one of the holes at the side. The movement of the slide shall be restricted by suitable stops, and its length and the disposition of the holes shall be such that, at the outer extremity of the movement of the slide, the holes in the cover are just completely opened and, at the inner extremity of the movement of the slide, they are completely closed.

© ISO 2013 – All rights reserved

The ignition source, either gas flame or hot wire, shall be arranged so that, when the slide is moved so as to uncover the holes, the oscillating ignition source is tilted over the central hole. For a flame ignition source, the lower edge of the cover shall bisect the circle formed by the bore of the jet when in the lowest position. For hot wire ignition sources, follow the manufacturers' instructions to set the lowest mechanical position. The ignition source shall then occupy a central position within the hole in both directions.

The thermometer shall be mounted on a diameter at right angles to the diameter through the centres of the holes, and fitted at such an angle as to bring the tip of the thermometer, when in place, vertically below the centre of the cover and at the correct distance from it.

The stirrer shall be mounted in a position diametrically opposite the thermometer mounting. Its length and the angle at which it is set shall be such that the stirrer rod clears the level gauge and the blades operate below the level of the thermometer bulb and without fouling it.

A.2.4 Stirrer

This shall be made of brass and conform to the form and dimensions given in Figure A.1 b).

It shall consist of a round stem having four blades at one end. The blades of the stirrer shall be set so that the liquid is thrust in a downward direction when the stirrer is rotated clockwise.

A.2.5 Heating vessel

This shall be constructed and thermally controlled to ensure that the heating rate of the test portion is 0,75 °C/min to 1,25 °C/min during the test. The vessel can be a replica of the manual configuration or a solid block made of aluminium, brass or a material with a similar thermal conductivity.

A.2.6 Heating device

Use any suitable heating/cooling device type, such as electrical or thermoelectric. These can be used in conjunction with an external cooling bath.

A.2.7 Flash Detector

Automated apparatus shall be equipped with an electronic flash detector. Follow the manufacturer's instructions for proper positioning and adjustment of this device.

Dimensions in millimetres

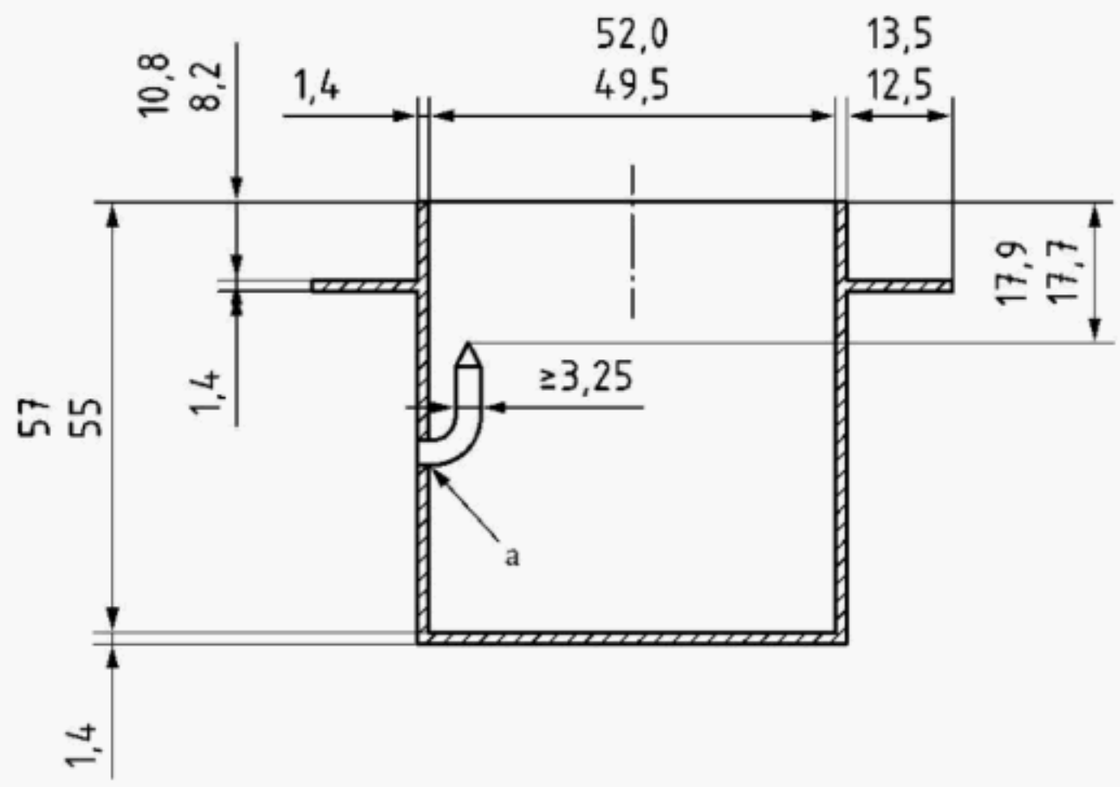

a) Test cup

Figure A.1 — Abel flash point apparatus — Test cup, cover, stirrer and thermometer collar
(continued)

© ISO 2013 – All rights reserved

Dimensions in millimetres

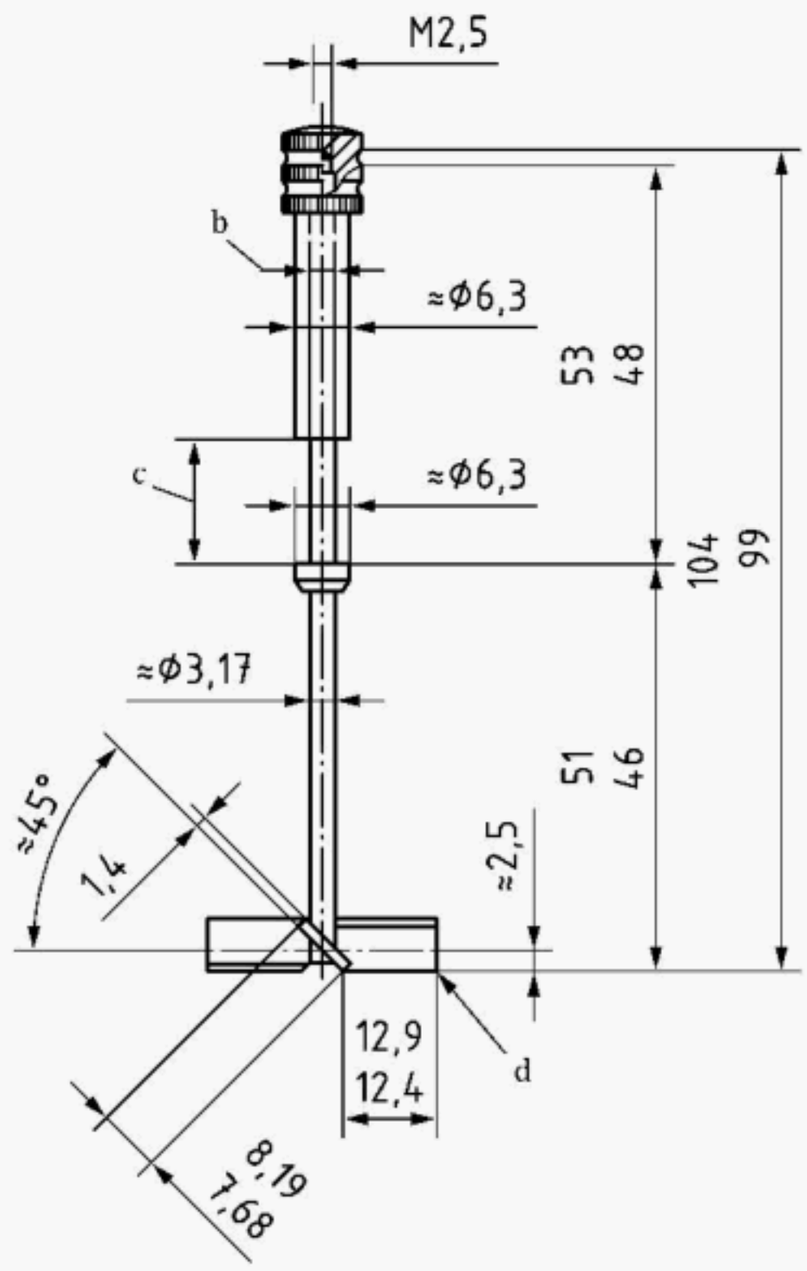

b) Stirrer

Figure A.1 — Abel flash point apparatus — Test cup, cover, stirrer and thermometer collar
(continued)

© ISO 2013 – All rights reserved

Dimensions in millimetres

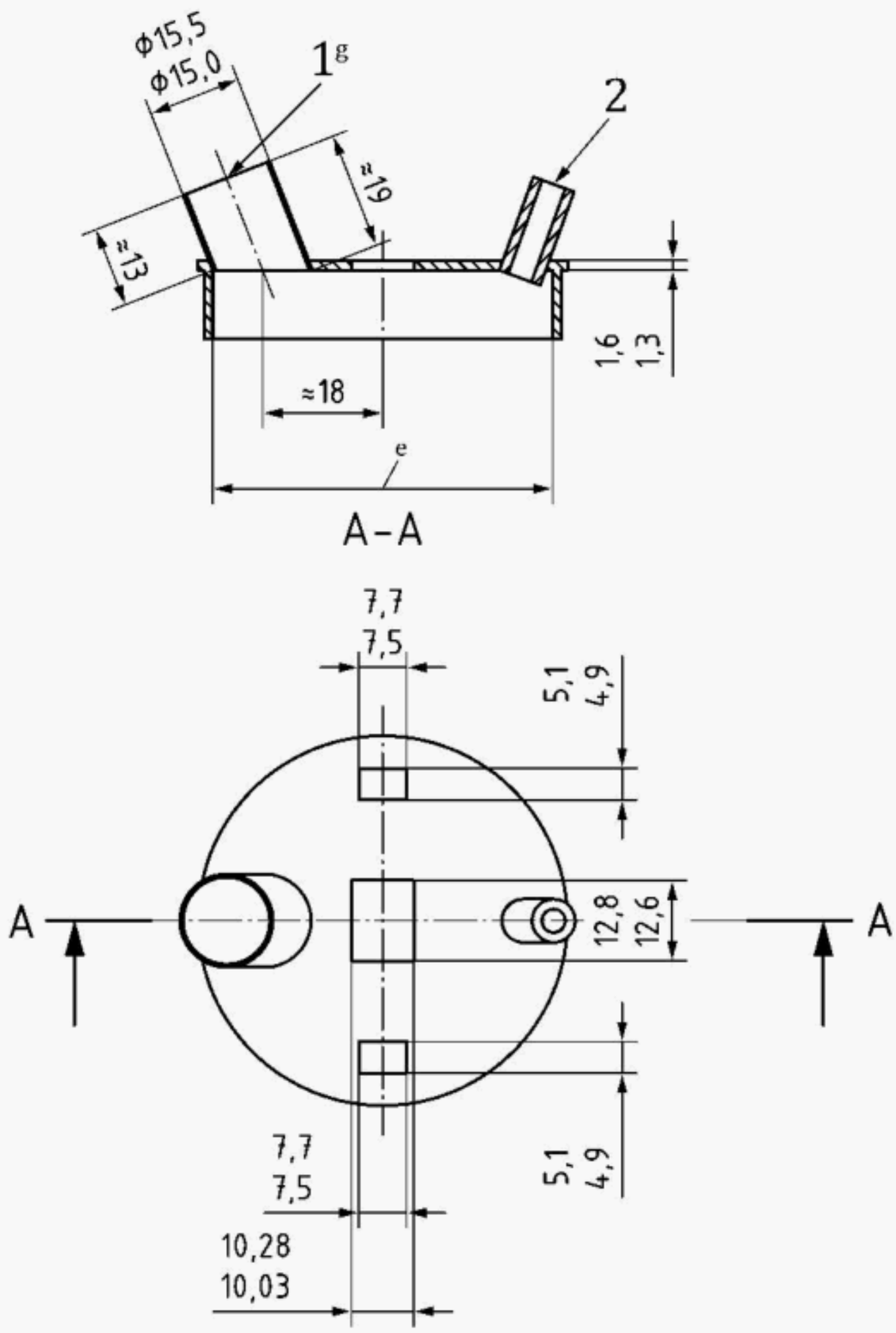

c) Cover

Figure A.1 — Abel flash point apparatus — Test cup, cover, stirrer and thermometer collar
(continued)

© ISO 2013 – All rights reserved

Dimensions in millimetres

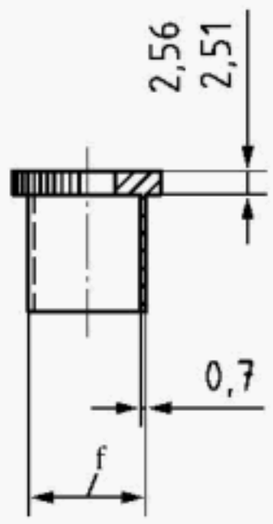

d) Thermometer collar

Key

1 thermometer socket

2 stirrer bush

a Brazed or silver-soldered.

b Inside diameter of sleeve is a sliding fit on stem.

c This dimension is such that the stirrer rotates freely with no appreciable end play when assembled on cover.

d All corners are rounded.

e Close fit over test cup.

f Push fit in thermometer socket on cover and heating vessel.

g It is recommended that, in order to achieve interchangeability, the internal diameter of the thermometer socket be between 15,235 mm and 15,253 mm and the external diameter of the thermometer collar be between 15,222 mm and 15,232 mm.

Note 1 All items of the apparatus shown are made of brass.

Note 2 See A.1.3 and A.2.3 for further details of the test cup cover requirements.

Figure A.1 — Abel flash point apparatus — Test cup, cover, stirrer and thermometer collar

© ISO 2013 – All rights reserved

Dimensions in millimetres

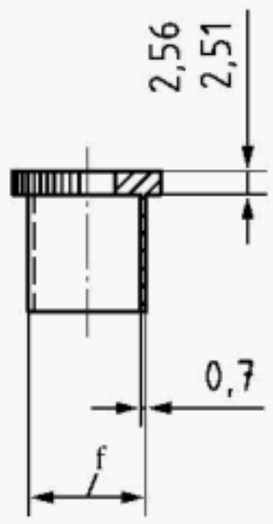

d) Thermometer collar

Key

1 thermometer socket

2 stirrer bush

a Brazed or silver-soldered.

b Inside diameter of sleeve is a sliding fit on stem.

c This dimension is such that the stirrer rotates freely with no appreciable end play when assembled on cover.

d All corners are rounded.

e Close fit over test cup.

f Push fit in thermometer socket on cover and heating vessel.

g It is recommended that, in order to achieve interchangeability, the internal diameter of the thermometer socket be between 15,235 mm and 15,253 mm and the external diameter of the thermometer collar be between 15,222 mm and 15,232 mm.

Note 1 All items of the apparatus shown are made of brass.

Note 2 See A.1.3 and A.2.3 for further details of the test cup cover requirements.

Figure A.1 — Abel flash point apparatus — Test cup, cover, stirrer and thermometer collar

© ISO 2013 – All rights reserved

Dimensions in millimetres

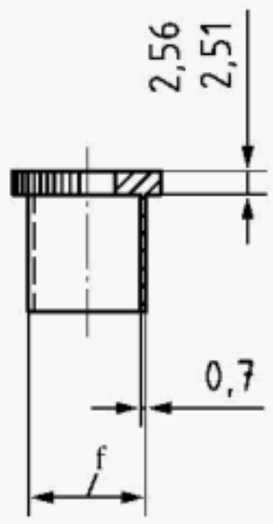

d) Thermometer collar

Key

1 thermometer socket

2 stirrer bush

a Brazed or silver-soldered.

b Inside diameter of sleeve is a sliding fit on stem.

c This dimension is such that the stirrer rotates freely with no appreciable end play when assembled on cover.

d All corners are rounded.

e Close fit over test cup.

f Push fit in thermometer socket on cover and heating vessel.

g It is recommended that, in order to achieve interchangeability, the internal diameter of the thermometer socket be between 15,235 mm and 15,253 mm and the external diameter of the thermometer collar be between 15,222 mm and 15,232 mm.

Note 1 All items of the apparatus shown are made of brass.

Note 2 See A.1.3 and A.2.3 for further details of the test cup cover requirements.

Figure A.1 — Abel flash point apparatus — Test cup, cover, stirrer and thermometer collar

© ISO 2013 – All rights reserved

Dimensions in millimetres

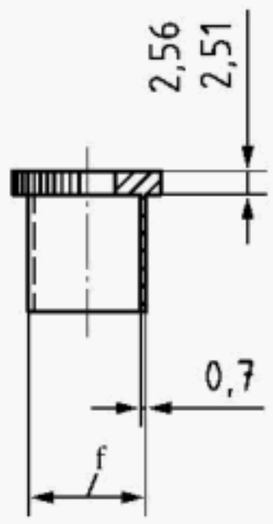

d) Thermometer collar

Key

1 thermometer socket

2 stirrer bush

a Brazed or silver-soldered.

b Inside diameter of sleeve is a sliding fit on stem.

c This dimension is such that the stirrer rotates freely with no appreciable end play when assembled on cover.

d All corners are rounded.

e Close fit over test cup.

f Push fit in thermometer socket on cover and heating vessel.

g It is recommended that, in order to achieve interchangeability, the internal diameter of the thermometer socket be between 15,235 mm and 15,253 mm and the external diameter of the thermometer collar be between 15,222 mm and 15,232 mm.

Note 1 All items of the apparatus shown are made of brass.

Note 2 See A.1.3 and A.2.3 for further details of the test cup cover requirements.

Figure A.1 — Abel flash point apparatus — Test cup, cover, stirrer and thermometer collar

© ISO 2013 – All rights reserved

Dimensions in millimetres

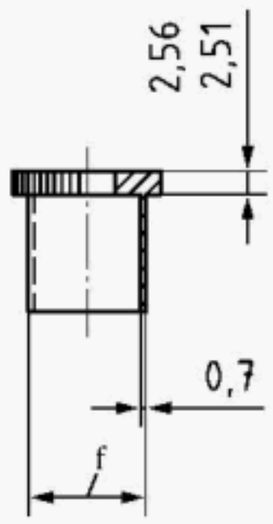

d) Thermometer collar

Key

1 thermometer socket

2 stirrer bush

a Brazed or silver-soldered.

b Inside diameter of sleeve is a sliding fit on stem.

c This dimension is such that the stirrer rotates freely with no appreciable end play when assembled on cover.

d All corners are rounded.

e Close fit over test cup.

f Push fit in thermometer socket on cover and heating vessel.

g It is recommended that, in order to achieve interchangeability, the internal diameter of the thermometer socket be between 15,235 mm and 15,253 mm and the external diameter of the thermometer collar be between 15,222 mm and 15,232 mm.

Note 1 All items of the apparatus shown are made of brass.

Note 2 See A.1.3 and A.2.3 for further details of the test cup cover requirements.

Figure A.1 — Abel flash point apparatus — Test cup, cover, stirrer and thermometer collar

© ISO 2013 – All rights reserved

Dimensions in millimetres

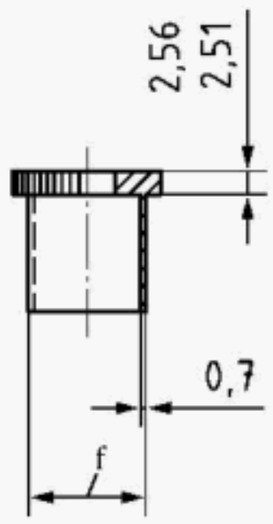

d) Thermometer collar

Key

1 thermometer socket

2 stirrer bush

a Brazed or silver-soldered.

b Inside diameter of sleeve is a sliding fit on stem.

c This dimension is such that the stirrer rotates freely with no appreciable end play when assembled on cover.

d All corners are rounded.

e Close fit over test cup.

f Push fit in thermometer socket on cover and heating vessel.

g It is recommended that, in order to achieve interchangeability, the internal diameter of the thermometer socket be between 15,235 mm and 15,253 mm and the external diameter of the thermometer collar be between 15,222 mm and 15,232 mm.

Note 1 All items of the apparatus shown are made of brass.

Note 2 See A.1.3 and A.2.3 for further details of the test cup cover requirements.

Figure A.1 — Abel flash point apparatus — Test cup, cover, stirrer and thermometer collar

© ISO 2013 – All rights reserved

Dimensions in millimetres

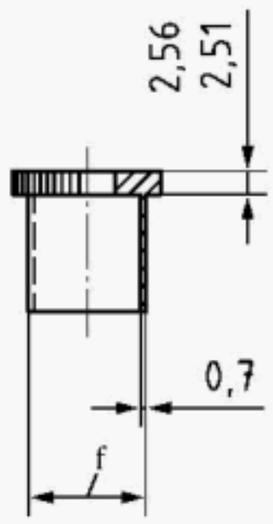

d) Thermometer collar

Key

1 thermometer socket

2 stirrer bush

a Brazed or silver-soldered.

b Inside diameter of sleeve is a sliding fit on stem.

c This dimension is such that the stirrer rotates freely with no appreciable end play when assembled on cover.

d All corners are rounded.

e Close fit over test cup.

f Push fit in thermometer socket on cover and heating vessel.

g It is recommended that, in order to achieve interchangeability, the internal diameter of the thermometer socket be between 15,235 mm and 15,253 mm and the external diameter of the thermometer collar be between 15,222 mm and 15,232 mm.

Note 1 All items of the apparatus shown are made of brass.

Note 2 See A.1.3 and A.2.3 for further details of the test cup cover requirements.

Figure A.1 — Abel flash point apparatus — Test cup, cover, stirrer and thermometer collar

© ISO 2013 – All rights reserved

Dimensions in millimetres

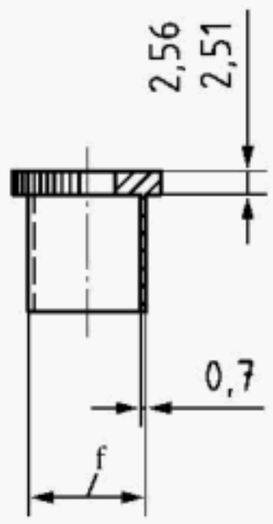

d) Thermometer collar

Key

1 thermometer socket

2 stirrer bush

a Brazed or silver-soldered.

b Inside diameter of sleeve is a sliding fit on stem.

c This dimension is such that the stirrer rotates freely with no appreciable end play when assembled on cover.

d All corners are rounded.

e Close fit over test cup.

f Push fit in thermometer socket on cover and heating vessel.

g It is recommended that, in order to achieve interchangeability, the internal diameter of the thermometer socket be between 15,235 mm and 15,253 mm and the external diameter of the thermometer collar be between 15,222 mm and 15,232 mm.

Note 1 All items of the apparatus shown are made of brass.

Note 2 See A.1.3 and A.2.3 for further details of the test cup cover requirements.

Figure A.1 — Abel flash point apparatus — Test cup, cover, stirrer and thermometer collar

© ISO 2013 – All rights reserved

Dimensions in millimetres

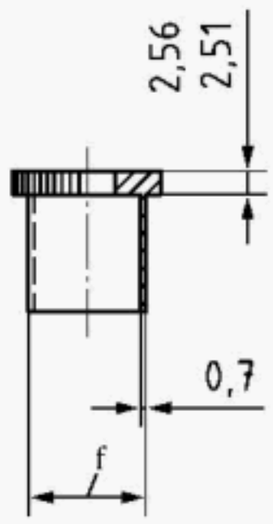

d) Thermometer collar

Key

1 thermometer socket

2 stirrer bush

a Brazed or silver-soldered.

b Inside diameter of sleeve is a sliding fit on stem.

c This dimension is such that the stirrer rotates freely with no appreciable end play when assembled on cover.

d All corners are rounded.

e Close fit over test cup.

f Push fit in thermometer socket on cover and heating vessel.

g It is recommended that, in order to achieve interchangeability, the internal diameter of the thermometer socket be between 15,235 mm and 15,253 mm and the external diameter of the thermometer collar be between 15,222 mm and 15,232 mm.

Note 1 All items of the apparatus shown are made of brass.

Note 2 See A.1.3 and A.2.3 for further details of the test cup cover requirements.

Figure A.1 — Abel flash point apparatus — Test cup, cover, stirrer and thermometer collar

© ISO 2013 – All rights reserved

Dimensions in millimetres

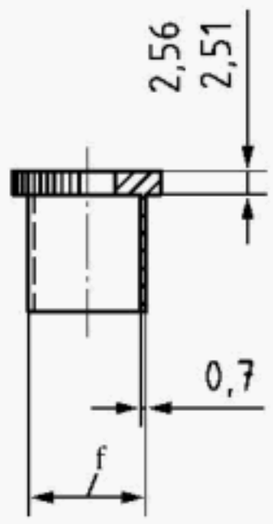

d) Thermometer collar

Key

1 thermometer socket

2 stirrer bush

a Brazed or silver-soldered.

b Inside diameter of sleeve is a sliding fit on stem.

c This dimension is such that the stirrer rotates freely with no appreciable end play when assembled on cover.

d All corners are rounded.

e Close fit over test cup.

f Push fit in thermometer socket on cover and heating vessel.

g It is recommended that, in order to achieve interchangeability, the internal diameter of the thermometer socket be between 15,235 mm and 15,253 mm and the external diameter of the thermometer collar be between 15,222 mm and 15,232 mm.

Note 1 All items of the apparatus shown are made of brass.

Note 2 See A.1.3 and A.2.3 for further details of the test cup cover requirements.

Figure A.1 — Abel flash point apparatus — Test cup, cover, stirrer and thermometer collar

© ISO 2013 – All rights reserved

Dimensions in millimetres

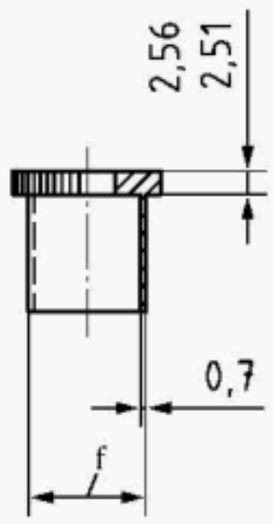

d) Thermometer collar

Key

1 thermometer socket

2 stirrer bush

a Brazed or silver-soldered.

b Inside diameter of sleeve is a sliding fit on stem.

c This dimension is such that the stirrer rotates freely with no appreciable end play when assembled on cover.

d All corners are rounded.

e Close fit over test cup.

f Push fit in thermometer socket on cover and heating vessel.

g It is recommended that, in order to achieve interchangeability, the internal diameter of the thermometer socket be between 15,235 mm and 15,253 mm and the external diameter of the thermometer collar be between 15,222 mm and 15,232 mm.

Note 1 All items of the apparatus shown are made of brass.

Note 2 See A.1.3 and A.2.3 for further details of the test cup cover requirements.

Figure A.1 — Abel flash point apparatus — Test cup, cover, stirrer and thermometer collar

© ISO 2013 – All rights reserved

Dimensions in millimetres

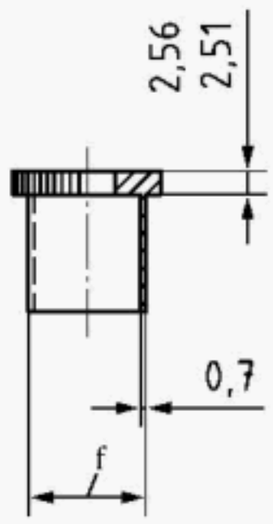

d) Thermometer collar

Key

1 thermometer socket

2 stirrer bush

a Brazed or silver-soldered.

b Inside diameter of sleeve is a sliding fit on stem.

c This dimension is such that the stirrer rotates freely with no appreciable end play when assembled on cover.

d All corners are rounded.

e Close fit over test cup.

f Push fit in thermometer socket on cover and heating vessel.

g It is recommended that, in order to achieve interchangeability, the internal diameter of the thermometer socket be between 15,235 mm and 15,253 mm and the external diameter of the thermometer collar be between 15,222 mm and 15,232 mm.

Note 1 All items of the apparatus shown are made of brass.

Note 2 See A.1.3 and A.2.3 for further details of the test cup cover requirements.

Figure A.1 — Abel flash point apparatus — Test cup, cover, stirrer and thermometer collar

© ISO 2013 – All rights reserved

Dimensions in millimetres

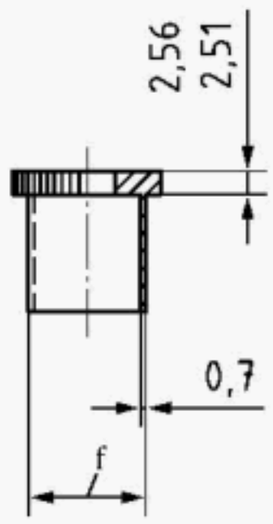

d) Thermometer collar

Key

1 thermometer socket

2 stirrer bush

a Brazed or silver-soldered.

b Inside diameter of sleeve is a sliding fit on stem.

c This dimension is such that the stirrer rotates freely with no appreciable end play when assembled on cover.

d All corners are rounded.

e Close fit over test cup.

f Push fit in thermometer socket on cover and heating vessel.

g It is recommended that, in order to achieve interchangeability, the internal diameter of the thermometer socket be between 15,235 mm and 15,253 mm and the external diameter of the thermometer collar be between 15,222 mm and 15,232 mm.

Note 1 All items of the apparatus shown are made of brass.

Note 2 See A.1.3 and A.2.3 for further details of the test cup cover requirements.

Figure A.1 — Abel flash point apparatus — Test cup, cover, stirrer and thermometer collar

© ISO 2013 – All rights reserved

Dimensions in millimetres

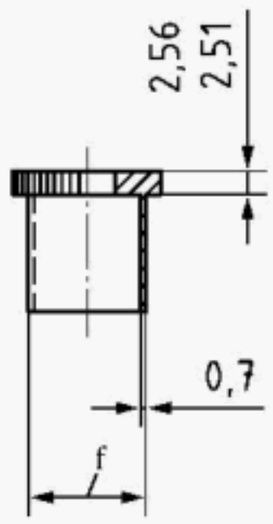

d) Thermometer collar

Key

1 thermometer socket

2 stirrer bush

a Brazed or silver-soldered.

b Inside diameter of sleeve is a sliding fit on stem.

c This dimension is such that the stirrer rotates freely with no appreciable end play when assembled on cover.

d All corners are rounded.

e Close fit over test cup.

f Push fit in thermometer socket on cover and heating vessel.

g It is recommended that, in order to achieve interchangeability, the internal diameter of the thermometer socket be between 15,235 mm and 15,253 mm and the external diameter of the thermometer collar be between 15,222 mm and 15,232 mm.

Note 1 All items of the apparatus shown are made of brass.

Note 2 See A.1.3 and A.2.3 for further details of the test cup cover requirements.

Figure A.1 — Abel flash point apparatus — Test cup, cover, stirrer and thermometer collar

© ISO 2013 – All rights reserved

Dimensions in millimetres

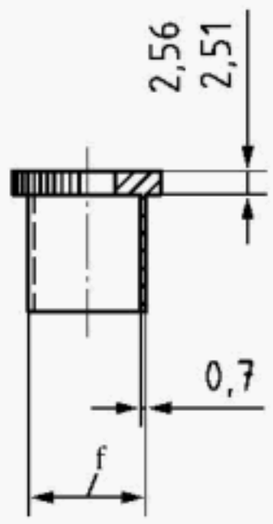

d) Thermometer collar

Key

1 thermometer socket

2 stirrer bush

a Brazed or silver-soldered.

b Inside diameter of sleeve is a sliding fit on stem.

c This dimension is such that the stirrer rotates freely with no appreciable end play when assembled on cover.

d All corners are rounded.

e Close fit over test cup.

f Push fit in thermometer socket on cover and heating vessel.

g It is recommended that, in order to achieve interchangeability, the internal diameter of the thermometer socket be between 15,235 mm and 15,253 mm and the external diameter of the thermometer collar be between 15,222 mm and 15,232 mm.

Note 1 All items of the apparatus shown are made of brass.

Note 2 See A.1.3 and A.2.3 for further details of the test cup cover requirements.

Figure A.1 — Abel flash point apparatus — Test cup, cover, stirrer and thermometer collar

© ISO 2013 – All rights reserved