BS EN ISO 9013:2017

BSI Standards Publication

Thermal cutting — Classification of thermal cuts — Geometrical product specification and quality tolerances (ISO 9013:2017)

Licensed copy: University of Auckland Library, University of Auckland Library, Version correct

bsi.

National foreword

This British Standard is the UK implementation of EN ISO 9013:2017. It supersedes BS EN ISO 9013:2002 which is withdrawn.

The UK participation in its preparation was entrusted to Technical Committee WEE/18, Gas welding and cutting appliances.

A list of organizations represented on this committee can be obtained on request to its secretary.

This publication does not purport to include all the necessary provisions of a contract. Users are responsible for its correct application.

© The British Standards Institution 2017.
Published by BSI Standards Limited 2017

ISBN 978 0 580 78681 5

ICS 17.040.40; 25.160.10

Compliance with a British Standard cannot confer immunity from legal obligations.

This British Standard was published under the authority of the Standards Policy and Strategy Committee on 28 February 2017.

Amendments/Corrigenda issued since publication

Date	Text affected

Licensed copy: University of Auckland Library, University of Auckland Library, Version correct as of 27/02/2017

EUROPEAN STANDARD

NORME EUROPÉENNE

EUROPÄISCHE NORM

EN ISO 9013

February 2017

ICS 25.160.10

Supersedes EN ISO 9013:2002

English Version

Thermal cutting - Classification of thermal cuts - Geometrical product specification and quality tolerances (ISO 9013:2017)

Coupage thermique - Classification des coupes thermiques - Spécification géométrique des produits et tolérances relatives à la qualité (ISO 9013:2017)

Thermisches Schneiden - Einteilung thermischer Schnitte - Geometrische Produktspezifikation und Qualität (ISO 9013:2017)

This European Standard was approved by CEN on 1 January 2017.

CEN members are bound to comply with the CEN/CENELEC Internal Regulations which stipulate the conditions for giving this European Standard the status of a national standard without any alteration. Up-to-date lists and bibliographical references concerning such national standards may be obtained on application to the CEN-CENELEC Management Centre or to any CEN member.

This European Standard exists in three official versions (English, French, German). A version in any other language made by translation under the responsibility of a CEN member into its own language and notified to the CEN-CENELEC Management Centre has the same status as the official versions.

CEN members are the national standards bodies of Austria, Belgium, Bulgaria, Croatia, Cyprus, Czech Republic, Denmark, Estonia, Finland, Former Yugoslav Republic of Macedonia, France, Germany, Greece, Hungary, Iceland, Ireland, Italy, Latvia, Lithuania, Luxembourg, Malta, Netherlands, Norway, Poland, Portugal, Romania, Serbia, Slovakia, Slovenia, Spain, Sweden, Switzerland, Turkey and United Kingdom.

EUROPEAN COMMITTEE FOR STANDARDIZATION
COMITÉ EUROPÉEN DE NORMALISATION
EUROPÄISCHES KOMITEE FÜR NORMUNG

CEN-CENELEC Management Centre: Avenue Marnix 17, B-1000 Brussels

© 2017 CEN All rights of exploitation in any form and by any means reserved worldwide for CEN national Members.

Ref. No. EN ISO 9013:2017 E

Licensed copy: University of Auckland Library, Version correct as of 27/02/2017

Licensed copy: University of Auckland Library. Version correct as of 27/02/2017

European foreword

This document (EN ISO 9013:2017) has been prepared by Technical Committee ISO/TC 44 "Welding and allied processes" in collaboration with Technical Committee CEN/TC 121 "Welding and allied processes" the secretariat of which is held by DIN.

This European Standard shall be given the status of a national standard, either by publication of an identical text or by endorsement, at the latest by August 2017, and conflicting national standards shall be withdrawn at the latest by August 2017.

Attention is drawn to the possibility that some of the elements of this document may be the subject of patent rights. CEN [and/or CENELEC] shall not be held responsible for identifying any or all such patent rights.

This document supersedes EN ISO 9013:2002.

According to the CEN-CENELEC Internal Regulations, the national standards organizations of the following countries are bound to implement this European Standard: Austria, Belgium, Bulgaria, Croatia, Cyprus, Czech Republic, Denmark, Estonia, Finland, Former Yugoslav Republic of Macedonia, France, Germany, Greece, Hungary, Iceland, Ireland, Italy, Latvia, Lithuania, Luxembourg, Malta, Netherlands, Norway, Poland, Portugal, Romania, Serbia, Slovakia, Slovenia, Spain, Sweden, Switzerland, Turkey and the United Kingdom.

Endorsement notice

The text of ISO 9013:2017 has been approved by CEN as EN ISO 9013:2017 without any modification.

Contents

Page

Foreword ... **iv**

1 Scope ... **1**

2 Normative references ... **1**

3 Terms and definitions ... **1**
3.1 General ... 1
3.2 Terms and definitions explained by figures ... 2
3.2.1 Terms related to the cutting process ... 2
3.2.2 Terms on the cut work piece ... 3
3.2.3 Cut types ... 4

4 Symbols ... **8**

5 Form and location tolerances ... **9**

6 Determination of the quality of cut surfaces ... **9**
6.1 General ... 9
6.2 Measuring ... 10
6.2.1 Measuring conditions ... 10
6.2.2 Measuring point ... 10
6.2.3 Procedure ... 11

7 Quality of the cut surface ... **12**
7.1 Characteristic values ... 12
7.2 Measuring ranges ... 12
7.2.1 General ... 12
7.2.2 Perpendicularity or angularity tolerance, *u* ... *12*
7.2.3 Mean height of the profile, *Rz*5 ... 13

8 Dimensional tolerances ... **15**
8.1 General ... 15
8.2 Dimensional tolerances on parts without finishing ... 18
8.3 Dimensional tolerances on parts with finishing ... 18
8.3.1 General ... 18
8.3.2 Machining allowance ... 19

9 Designation ... **19**

10 Information in technical documentation ... **20**
10.1 Indications of size ... 20
10.2 Indication of quality of cut surface and of tolerance class ... 20
10.2.1 On technical drawings ... 20
10.2.2 Title block of technical documentation ... 20

Annex A (informative) **Achievable cut qualities for different cutting processes** ... **21**

Annex B (informative) **Thermal cutting — Process principles** ... **26**

Bibliography ... **28**

Licensed copy: University of Auckland Library. Version correct as of 27/02/2017

Foreword

ISO (the International Organization for Standardization) is a worldwide federation of national standards bodies (ISO member bodies). The work of preparing International Standards is normally carried out through ISO technical committees. Each member body interested in a subject for which a technical committee has been established has the right to be represented on that committee. International organizations, governmental and non-governmental, in liaison with ISO, also take part in the work. ISO collaborates closely with the International Electrotechnical Commission (IEC) on all matters of electrotechnical standardization.

The procedures used to develop this document and those intended for its further maintenance are described in the ISO/IEC Directives, Part 1. In particular the different approval criteria needed for the different types of ISO documents should be noted. This document was drafted in accordance with the editorial rules of the ISO/IEC Directives, Part 2 (see www.iso.org/directives).

Attention is drawn to the possibility that some of the elements of this document may be the subject of patent rights. ISO shall not be held responsible for identifying any or all such patent rights. Details of any patent rights identified during the development of the document will be in the Introduction and/or on the ISO list of patent declarations received (see www.iso.org/patents).

Any trade name used in this document is information given for the convenience of users and does not constitute an endorsement.

For an explanation on the meaning of ISO specific terms and expressions related to conformity assessment, as well as information about ISO's adherence to the World Trade Organization (WTO) principles in the Technical Barriers to Trade (TBT) see the following URL: www.iso.org/iso/foreword.html.

The committee responsible for this document is ISO/TC 44, *Welding and allied processes*, Subcommittee SC 8, *Equipment for gas welding, cutting and allied processes*.

This third edition cancels and replaces the second edition (ISO 9013:2002), which has been technically revised.

Requests for official interpretations of any aspect of this document should be directed to the Secretariat of ISO/TC 44/SC 8 via your national standards body. A complete listing of these bodies can be found at www.iso.org.

Licensed copy: University of Auckland Library, Version correct as of 27/02/2017

© ISO 2017 – All rights reserved

Licensed copy: University of Auckland Library. Version correct as of 27/02/2017

Thermal cutting — Classification of thermal cuts — Geometrical product specification and quality tolerances

1 Scope

This document presents geometrical product specifications and quality tolerances for the classification of thermal cuts in materials suitable for oxyfuel flame cutting, plasma cutting and laser cutting. It is applicable to flame cuts from 3 mm to 300 mm, plasma cuts from 0,5 mm to 150 mm and laser cuts from 0,5 mm to 32 mm.

The geometrical product specifications are applicable if reference to this document is made in drawings or pertinent documents, e.g. delivery conditions. If this document were also to apply, by way of exception, to parts produced by other cutting processes, this would have to be agreed upon separately.

Flatness defects are not addressed as such in this document. The references are to the current standards for the materials used.

2 Normative references

The following documents are referred to in the text in such a way that some or all of their content constitutes requirements of this document. For dated references, only the edition cited applies. For undated references, the latest edition of the referenced document (including any amendments) applies.

ISO 1302:2002, *Geometrical Product Specifications (GPS) — Indication of surface texture in technical product documentation*

ISO 3274, *Geometrical Product Specifications (GPS) — Surface texture: Profile method — Nominal characteristics of contact (stylus) instruments*

ISO 4288, *Geometrical Product Specifications (GPS) — Surface texture: Profile method — Rules and procedures for the assessment of surface texture*

ISO 8015, *Geometrical product specifications (GPS) — Fundamentals — Concepts, principles and rules*

3 Terms and definitions

For the purposes of this document, the following terms and definitions apply.

ISO and IEC maintain terminological databases for use in standardization at the following addresses:

— IEC Electropedia: available at http://www.electropedia.org/

— ISO Online browsing platform: available at http://www.iso.org/obp

3.1 General

3.1.1
cutting
operation of cutting the work piece

3.1.2
cut
result of the cutting operation

© ISO 2017 – All rights reserved

3.2 Terms and definitions explained by figures

NOTE Figure 1 indicates the terms related to the cutting process of the work piece after the cutting process has started, Figure 2 indicates the terms for the finished work piece, Figure 3 shows a straight cut and Figure 4, a contour cut.

3.2.1 Terms related to the cutting process

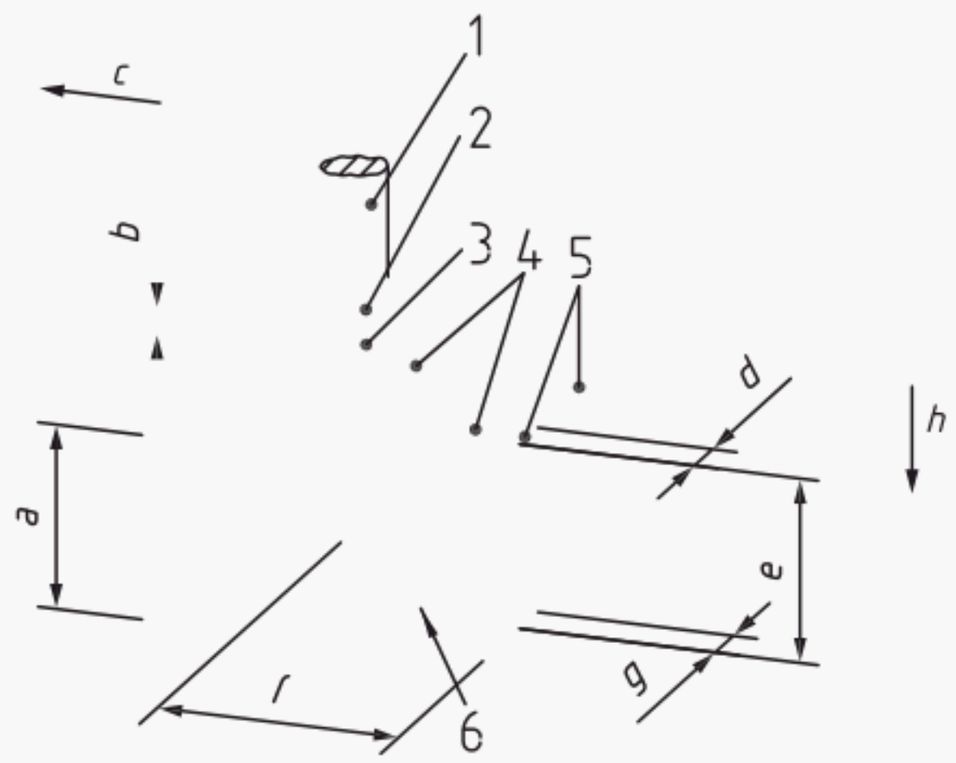

Key

1 torch/cutting head
2 nozzle
3 beam/flame/arc
4 kerf
5 start of cut
6 end of cut

a work piece thickness
b nozzle distance
c advance direction
d top kerf width
e cut thickness
f length of cut
g bottom kerf width
h cutting direction

Figure 1 — Terms related to the cutting process of the work piece

Licensed copy: University of Auckland Library, Version correct as of 27/02/2017

© ISO 2017 – All rights reserved

3.2.2 Terms on the cut work piece

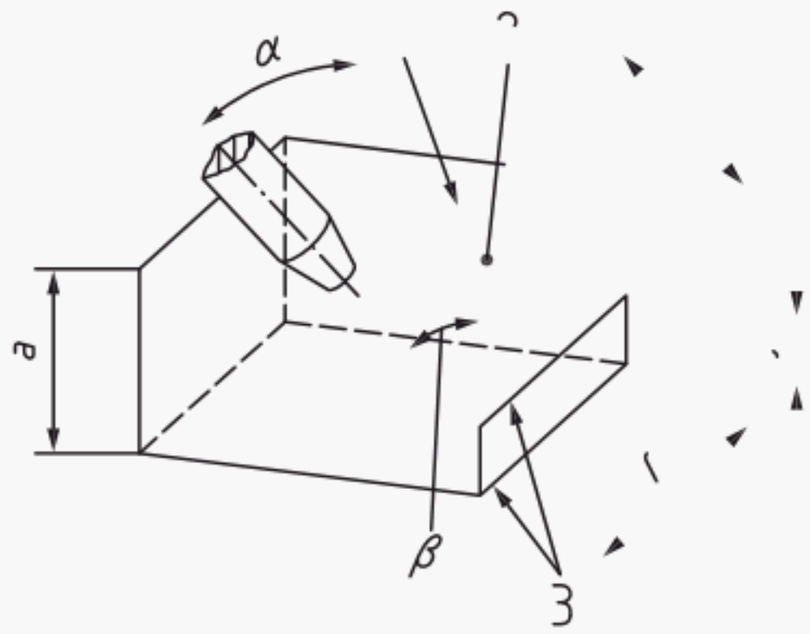

Key

1 upper edge of cut
2 cut surface
3 lower edge of cut
a work piece thickness
i cut thickness
j depth of root face
f length of cut
α torch set angle
β cut angle

Figure 2 — Terms on the finished work piece

Licensed copy: University of Auckland Library. Version correct as of 27/02/2017

3.2.3 Cut types

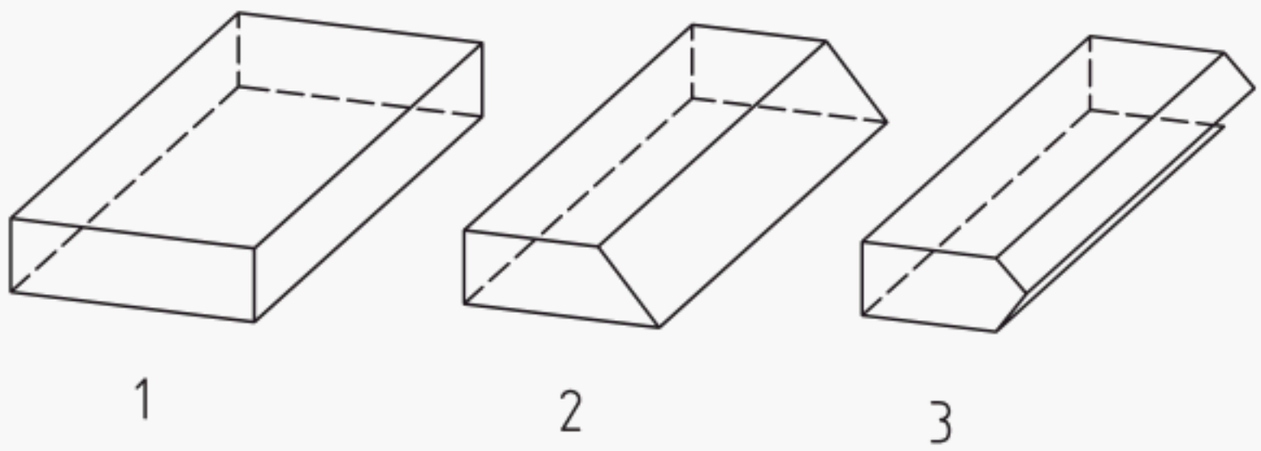

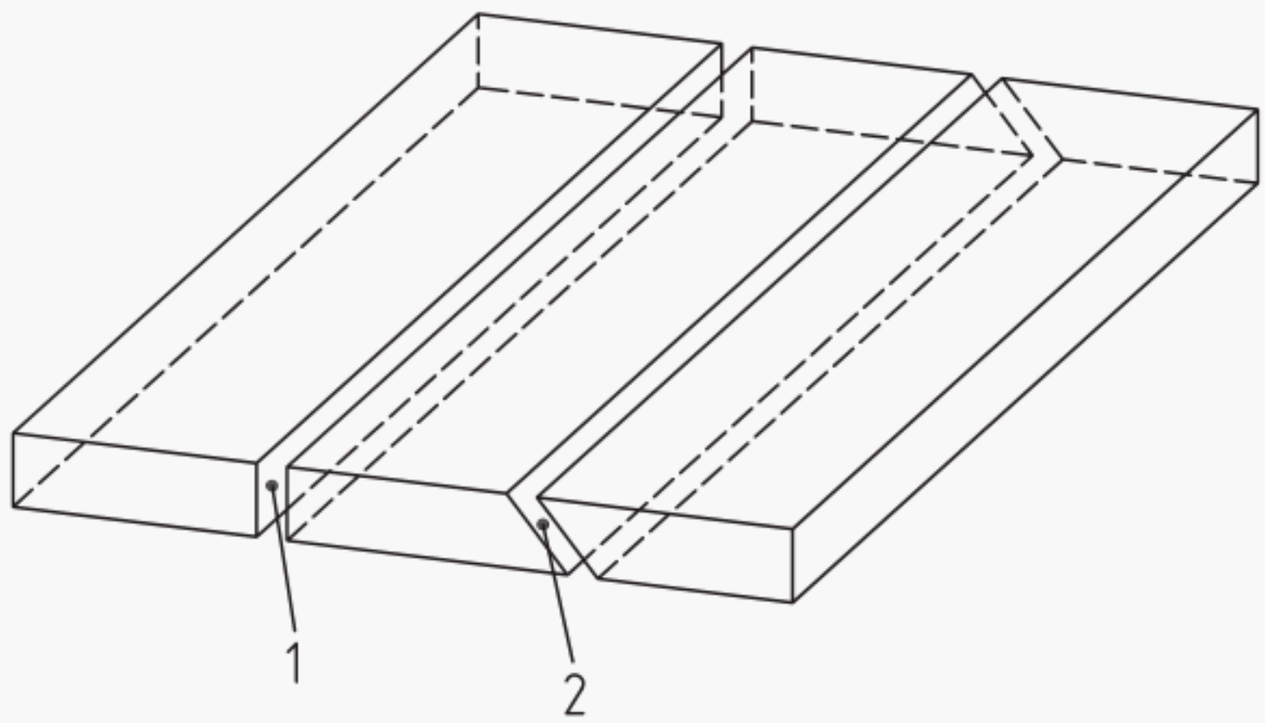

Key

1 vertical cut
2 bevel cut
3 bevel cut (double)

Figure 3 — Straight cut

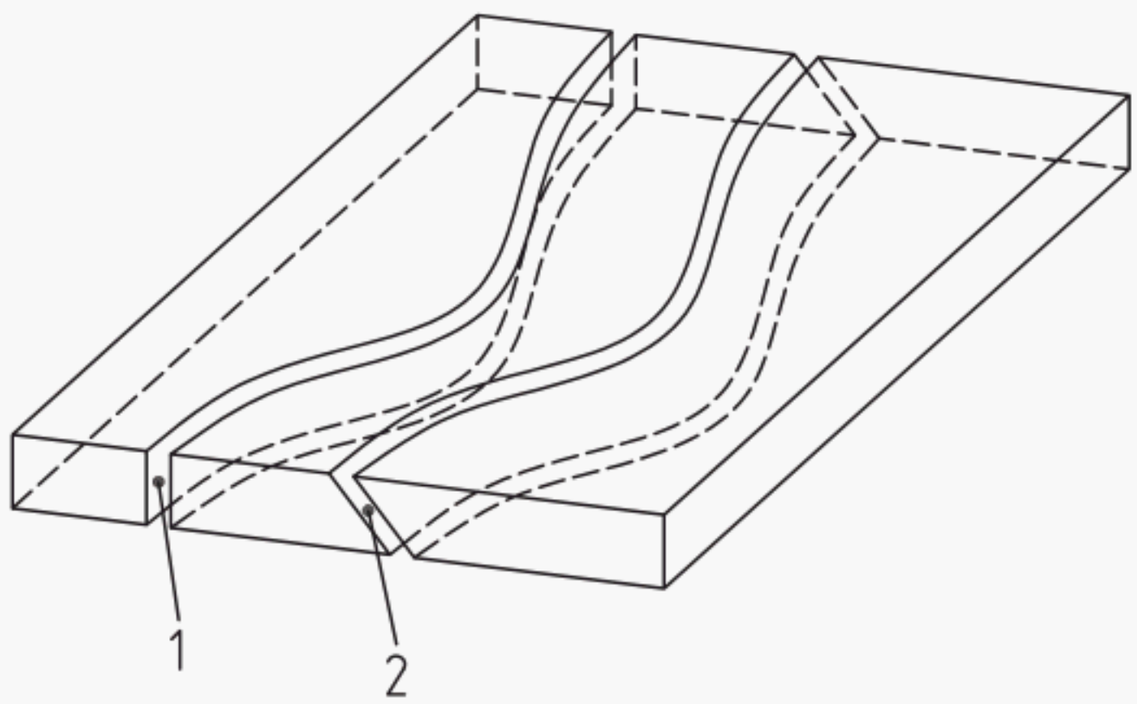

Key

1 vertical cut
2 bevel cut

Figure 4 — Contour cut

Licensed copy: University of Auckland Library, Version correct as of 27/02/2017

© ISO 2017 – All rights reserved

Licensed copy: University of Auckland Library, Version correct as of 27/02/2017

3.3
cutting speed
length of cut completed per unit time

3.4
kerf width
width of the cut produced during a cutting process at the upper edge of cut or with existing melting of top edge immediately below, as caused by the cutting jet

3.5
drag
n
projected distance between the two edges of a drag line in the direction of cutting

Note 1 to entry: See Figure 5.

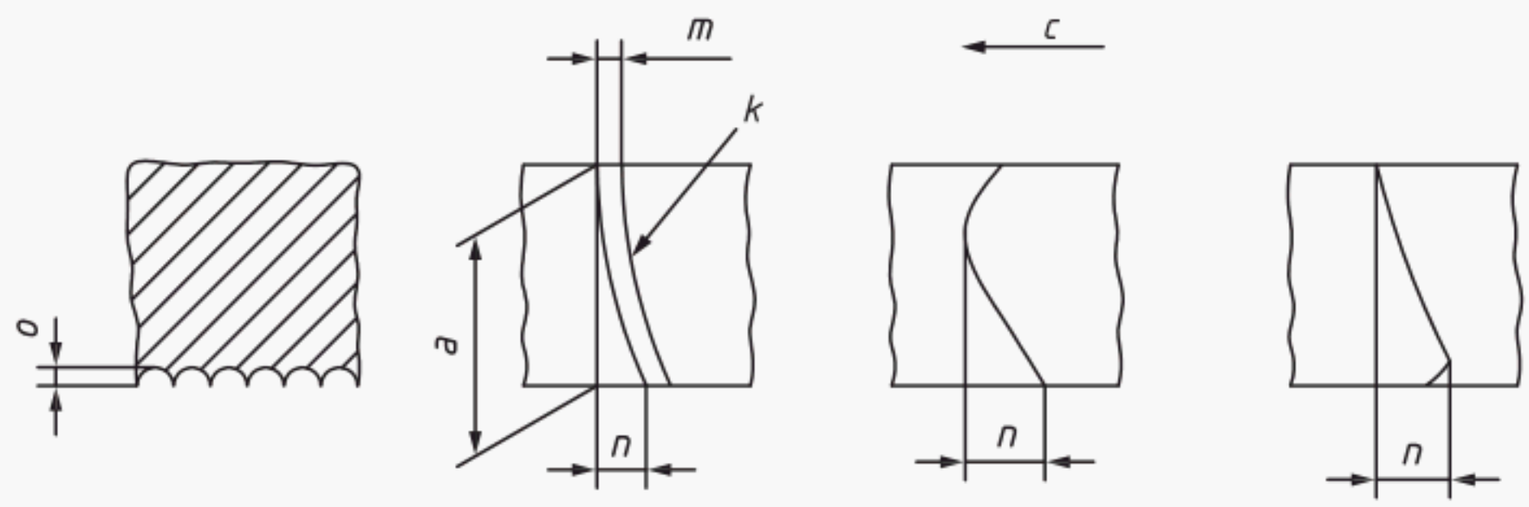

Key

a work piece thickness (reference line)
c advance direction
k drag line
m pitch of drag line
n drag
o groove depth

Figure 5 — Drag line

3.6
perpendicularity or angularity tolerance
u
distance between two parallel straight lines (tangents) between which the cut surface profile is inscribed and within the set angle (e.g. 90° in the case of vertical cuts)

Note 1 to entry: The perpendicularity or angularity tolerance includes not only the perpendicularity but also the flatness deviations. Figure 6 illustrates the areas in the cut surface to take into consideration to measure the perpendicularity or inclination tolerance, *u*, depending on the cutting process used.

© ISO 2017 – All rights reserved

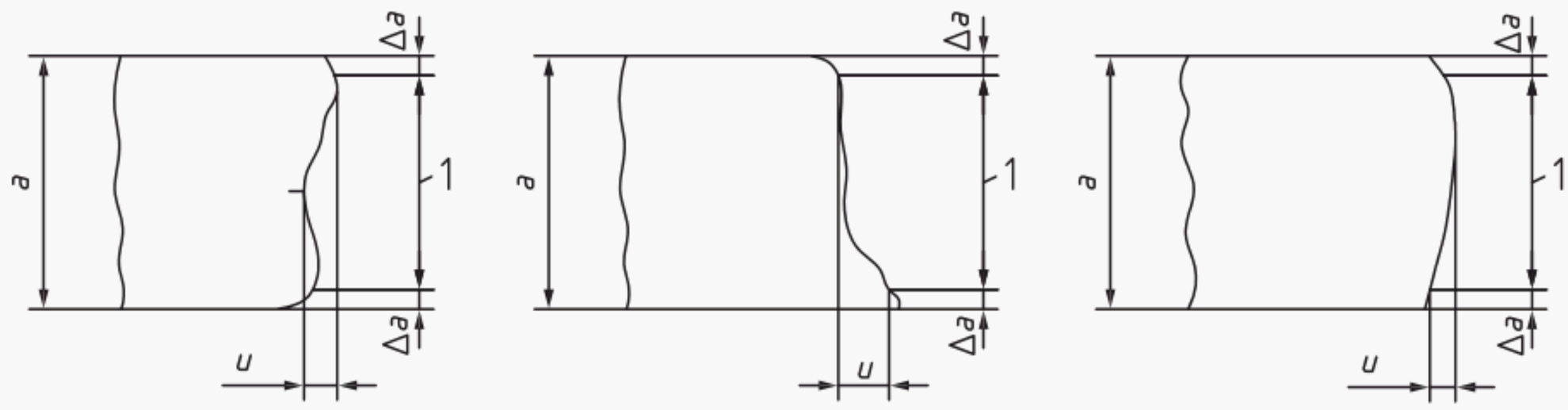

a) Vertical cut

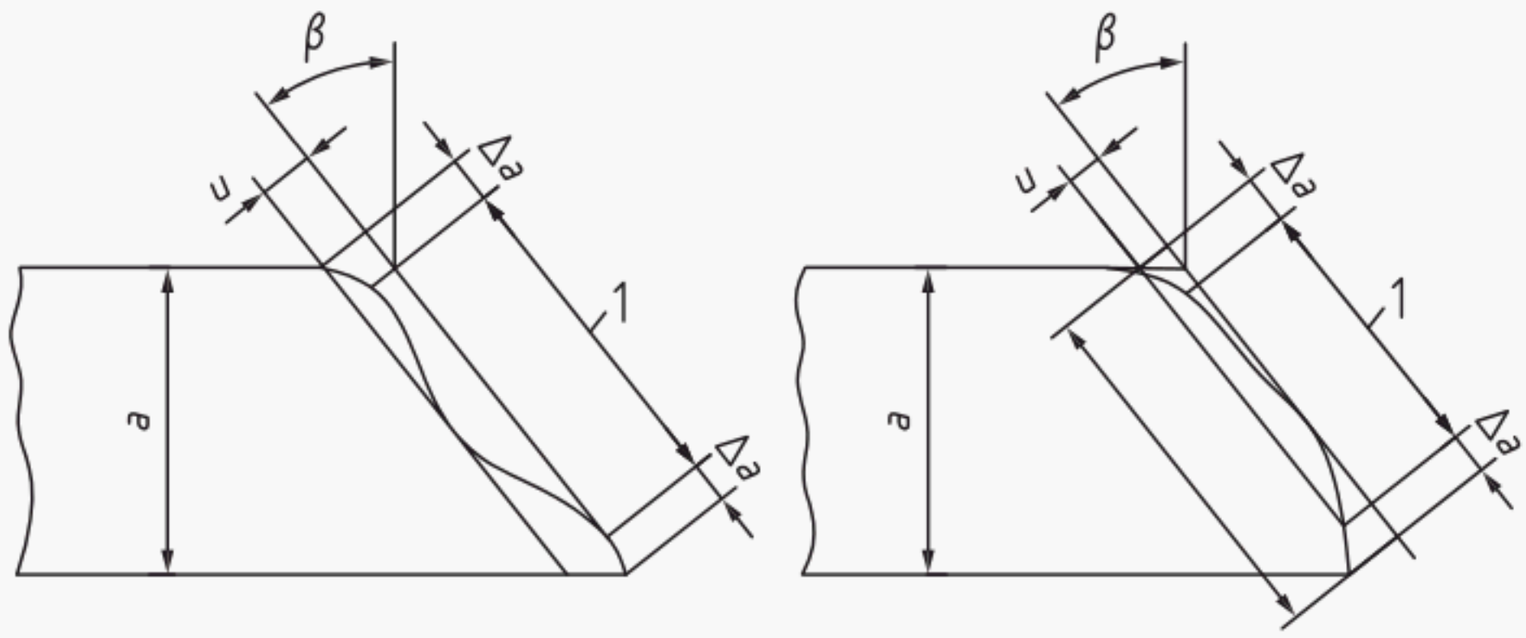

b) Bevel cut

Key

1 distance to calculate the area to determine the perpendicularity or angularity tolerance

a work piece thickness

Δa thickness reduction

i cut thickness

u perpendicularity or angularity tolerance

β cut angle

NOTE The area to determine the perpendicularity or angularity tolerance is determined by multiplying the distance 1 with the length of cut (see Figure 2).

Figure 6 — Perpendicularity or angularity tolerances

3.7
profile element height
Zt
sum of the height of the peak and depth of the valley of a profile element

[SOURCE: ISO 4287:2009, 3.2.12]

3.8
mean height of the profile
*Rz*5
arithmetic mean of the single profile elements of five bordering single measured distances

Note 1 to entry: See Figure 7.

Note 2 to entry: The index 5 in *Rz*5 was added to distinguish the arithmetic mean and the maximum height of profile of the five single profile elements.

 © ISO 2017 – All rights reserved

Licensed copy: University of Auckland Library, Version correct as of 27/02/2017

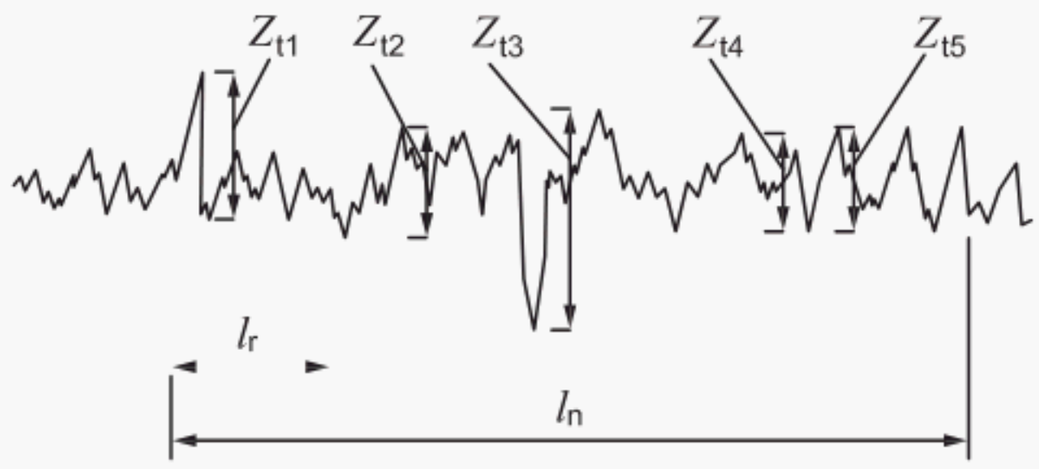

Key

Zt_1 to Zt_5	single profile elements
ln	evaluation length
lr	single sampling length (1/5 of *ln*)

Figure 7 — Mean height of the profile

3.9
melting of top edge
r
measure characterizing the form of the upper edge of cut

Note 1 to entry: The latter may be a sharp edge, a molten edge or cut edge overhang.

Note 2 to entry: See Figure 8.

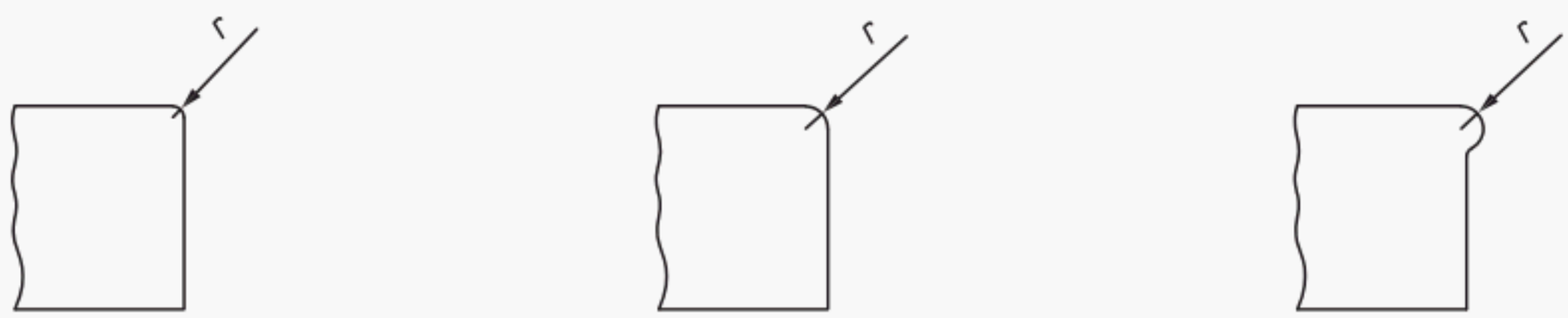

a) Sharp edge **b) Molten edge** **c) Cut edge overhang**

Figure 8 — Melting

3.10
burr
dross
metal residue sticking to the lower part of the cut

Note 1 to entry: During the thermal cutting process, creation of minor flash that sticks to the cut work piece associated with oxides or molten steel projections that drip and solidify on the lower edge of the work piece (see Figure 9).

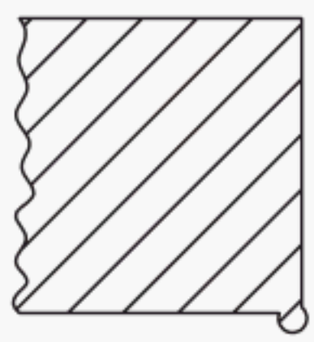

Figure 9 — Burr/dross

Licensed copy: University of Auckland Library, Version correct as of 27/02/2017

Licensed copy: University of Auckland Library, Version correct as of 27/02/2017

3.11
gouging
scourings or kerves of irregular width, depth and shape, preferably in the cutting direction, which interrupt an otherwise uniform cut surface

Note 1 to entry: See Figure 10.

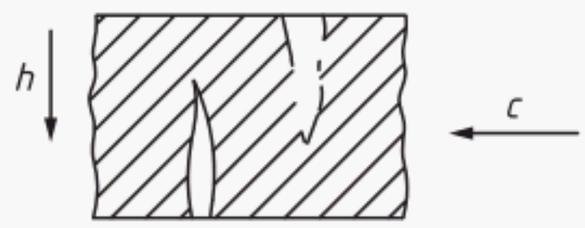

Key

h cutting direction

c advance direction

Figure 10 — Gouging

3.12
start of cut
point of the work piece at which the cut begins

4 Symbols

Symbol	Term
a	work piece thickness
Δa	thickness reduction
A	assembly dimension
α	torch set angle
b	nozzle distance
B	programmed dimension of the cut part
β	cut angle
B_z	machining allowance
c	advance direction
d	top kerf width
e	cut thickness
f	length of cut
g	bottom kerf width
G_o	upper limit deviation
G_u	lower limit deviation
h	cutting direction
i	cut thickness
j	depth of root face
k	drag line
ln	evaluation length
lr	single sampling length
m	pitch of drag line
n	drag
o	groove depth
r	melting of top edge

© ISO 2017 – All rights reserved

Symbol	Term
$Rz5$	mean height of the profile
t_G	straightness tolerance
t_P	parallelism tolerance
t_W	perpendicularity tolerance
u	perpendicularity or angularity tolerance
Zt	profile element height

5 Form and location tolerances

Figure 11 shows the maximum deviations within the tolerance zone.

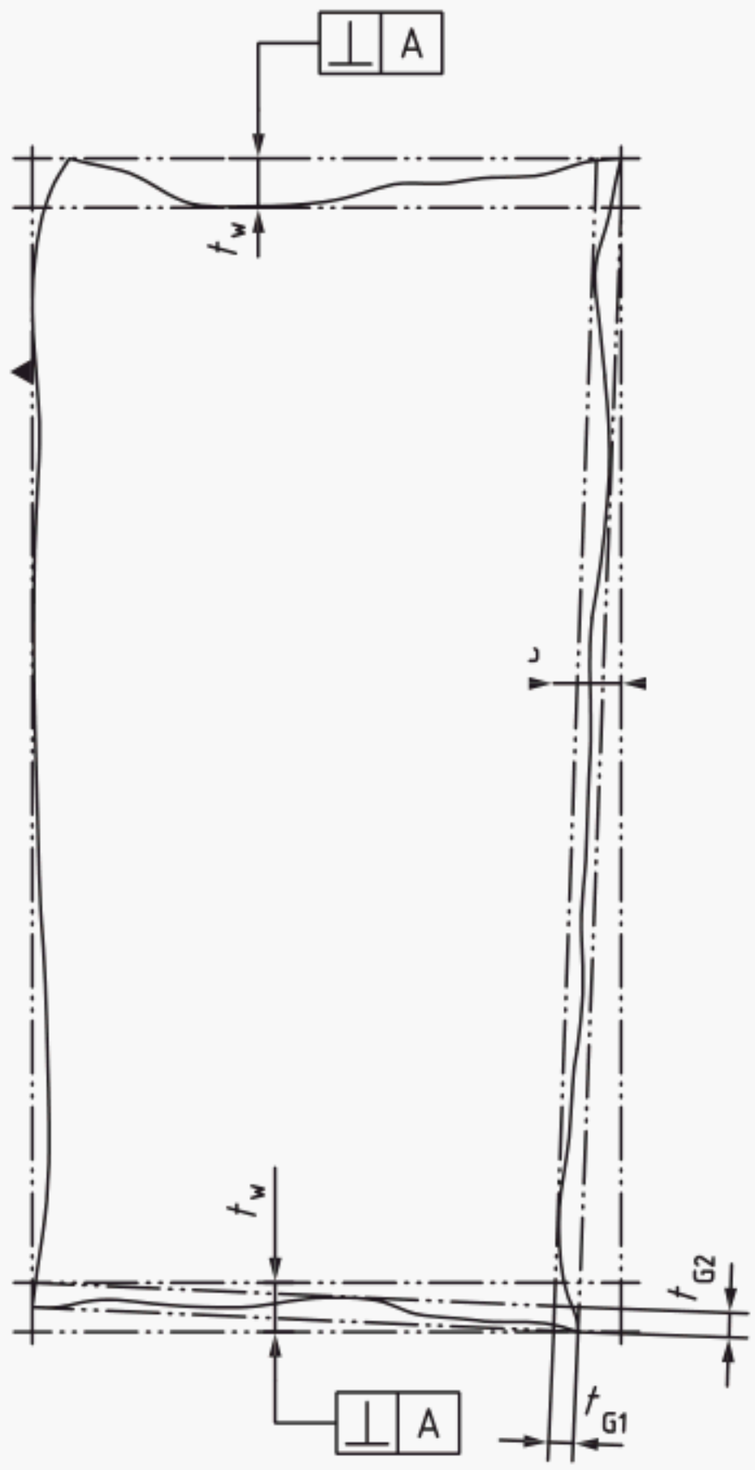

Key

t_W perpendicularity tolerance (see ISO 1101) for cut width referred to A

t_P parallelism tolerance (see ISO 1101) for cut width referred to A on sheet level

t_{G1} straightness tolerance (see ISO 1101) for cut length

t_{G2} straightness tolerance (see ISO 1101) for cut width

Figure 11 — Form and location tolerances shown by the example of a sheet plate

6 Determination of the quality of cut surfaces

6.1 General

See Tables 1 and 2.

Licensed copy: University of Auckland Library, Version correct as of 27/02/2017

Licensed copy: University of Auckland Library. Version correct as of 27/02/2017

Table 1 — Precision measuring instruments

Symbol	Precision measuring instruments	
	Error limits	Examples
u	0,02 mm	Guide device in the direction of the cut thickness and of the nominal angle with dial gauge Contact stylus point angle ≤90° Contact stylus point radius ≤0,1 mm
*Rz*5	0,002 mm	Precision measuring instrument, e.g. electric contact stylus instrument for continuous scanning in advance direction
n	0,05 mm	Measuring microscope with crosswires (crosshair) and cross-slide of sufficient adjustability
r	0,05 mm	Special device for scanning the profile of the cut upper edge by a dial gauge
Straightness	0,2 mm	Piano wire with max. 0,5 mm diameter, feeler gauge

Table 2 — Coarse measuring instruments

Symbol	Coarse measuring instruments	
	Error limits	Examples
u	0,1 mm	Tri-square (workshop square with a degree of precision 1 or 2), for bevel cuts, bevel gauge or set square set to the nominal angle of bevel of cut or set angle, for this purpose depth gauge with sensing point, measuring wire, feeler gauge
*Rz*5	—	—
n	0,2 mm	Tri-square (workshop square) for bevel cuts, sliding square or set square, for this purpose calliper gauge with nonius or graduated ruler with nonius. Bevel gauge with conversion table from the drag angle to the drag length
r	0,1 mm	Convex gauge (radius gauge)
Straightness	0,2 mm	Piano wire with max. 0,5 mm diameter, feeler gauge

The measurement conditions, measurement points and methods for determining and evaluating the characteristics of cut surfaces shall conform to 6.2.

6.2 Measuring

6.2.1 Measuring conditions

Measurements shall be carried out on brushed, free-from-oxides cuts outside areas including imperfections.

As reference element, the upper and lower sides of the thermally cut work piece are taken. They shall be even and clean.

Straightness is defined as the minimum distance between the measurement line and the actual surface (see ISO 1101).

6.2.2 Measuring point

6.2.2.1 General

The number and location of the measuring points depend on the shape and size of the work piece and sometimes also on the intended use.

The cut surfaces are classified in the tolerance fields according to the maximum measured values. Therefore, the measuring points shall be located where the maximum measured values are to be expected. When choosing the measuring points, due consideration shall be given to the fact that the

 © ISO 2017 – All rights reserved

Licensed copy: University of Auckland Library, Version correct as of 27/02/2017

maximum values of the mean height of the profile and of the perpendicularity or angularity tolerance may be found at different points of the cut. If measured values are located at the lower limit of a tolerance field, additional measurements should be carried out due to the uncertainty of the visual selection of the point with the expected maximum measured value. If measured values are located at the upper limit of the tolerance field or if there are any doubts regarding some measuring results, supplementary measurements shall be carried out on the same number of additional measuring points.

6.2.2.2 Number of the measuring points

The number and location of the measuring points shall be defined by the manufacturer.

If no requirement is specified, carry out:

u two times three measurements at a distance of 20 mm each on each meter of the cut;

*Rz*5 one time one measurement on each meter of the cut.

6.2.2.3 Location of the measuring points

The characteristic value of perpendicularity or angularity tolerance, *u*, only will be determined in a limited area of the cut surface. The area shall be reduced by the dimension Δa according to Table 3 from the upper and the lower cut surface edges (see Figure 6).

NOTE The reason for the reduced cut face profile is to allow for the melting of the top edge.

Table 3 — Dimensions for Δa

Cut thickness, *a* mm	Δa mm
≤3	0,1 *a*
>3 ≤6	0,3
>6 ≤10	0,6
>10 ≤20	1
>20 ≤40	1,5
>40 ≤100	2
>100 ≤150	3
>150 ≤200	5
>200 ≤250	8
>250 ≤300	10

The characteristic value of the mean height of the profile, *Rz*5, shall be determined within a limited area of the cut surface and the mean height of the profile, *Rz*5, shall be measured at 15 mm from the start of the cut in the advance direction. The measurement shall be carried out at the point of the maximum surface roughness of the cut surface, according to ISO 4288, using a device as described in ISO 3274.

6.2.3 Procedure

The characteristic values for the cut surfaces will be determined, according to the type of measurement, by means of the corresponding instruments listed in Tables 1 and 2.

The mean height of the profile, *Rz*5, shall be measured at 15 mm from the cut length in the advance direction. The measurement will take place in accordance with ISO 4288 using a tester as described in ISO 3274.

If a measuring wire or sensor for coarse measurement of the perpendicularity or angularity tolerance cannot be introduced in the gap between shifting square and cut surface, a depth gauge with sensing

© ISO 2017 – All rights reserved

Licensed copy: University of Auckland Library, Version correct as of 27/02/2017

point shall be used. In the case of molten edges with unfinished projection, the latter will be considered in the perpendicularity or angularity tolerance.

For cut thicknesses below 2 mm, the measuring procedure to determine the perpendicularity or angularity tolerance specifically has to be agreed upon.

For cut thicknesses below 2 mm, the measurement of *Rz*5 is carried out at a distance of 1/2 of the cut thickness from the upper cut edge.

With regard to all thermal cutting processes, the piercing area and/or the start section of a cut will be excluded from the measurements. The same applies to the end of the cut.

7 Quality of the cut surface

7.1 Characteristic values

The quality of the cut surfaces of thermally cut materials is described by the following characteristic values:

a) perpendicularity or angularity tolerance, *u*;

b) mean height of the profile, *Rz*5.

The following characteristic values may be used in addition:

— drag, *n*;

— melting of top edge, *r*;

— possibly occurrence of dross or melting drops on the lower edge of the cut.

7.2 Measuring ranges

7.2.1 General

For quality, the ranges for perpendicularity or angularity tolerance, *u*, and mean height of the profile, *Rz*5, shall be indicated in the order *u*, *Rz*5. Where no value is fixed, a “0” (zero) shall be indicated.

Isolated faults, such as gouges, the unavoidable formation of melting beads on the lower edge of the cut at the start of cuts, or oxide remainders on the cut surface have not been considered when defining the quality values of this document.

At multi flank cuts, e.g. for Y, double V or double HV seams (see ISO 2553), each cut surface shall be evaluated separately.

7.2.2 Perpendicularity or angularity tolerance, *u*

The ranges for the perpendicularity or angularity tolerance, *u*, are shown in Table 4 and in Figure 12.

Table 4 — Perpendicularity or angularity tolerance, *u*

Range	Perpendicularity or angularity tolerance, *u* mm
1	0,05 + 0,003 *a*
2	0,15 + 0,007 *a*
3	0,4 + 0,01 *a*
4	0,8 + 0,02 *a*
5	1,2 + 0,035 *a*

© ISO 2017 – All rights reserved

Licensed copy: University of Auckland Library. Version correct as of 27/02/2017

7.2.3 Mean height of the profile, *Rz*5

The ranges for the mean height of the profile, *Rz*5, are shown in Table 5 and in Figure 13.

Table 5 — Mean height of the profile, *Rz*5

Range	Mean height of the profile, *Rz*5 µm
1	10 + (0,6 *a* mm)
2	40 + (0,8 *a* mm)
3	70 + (1,2 *a* mm)
4	110 + (1,8 *a* mm)

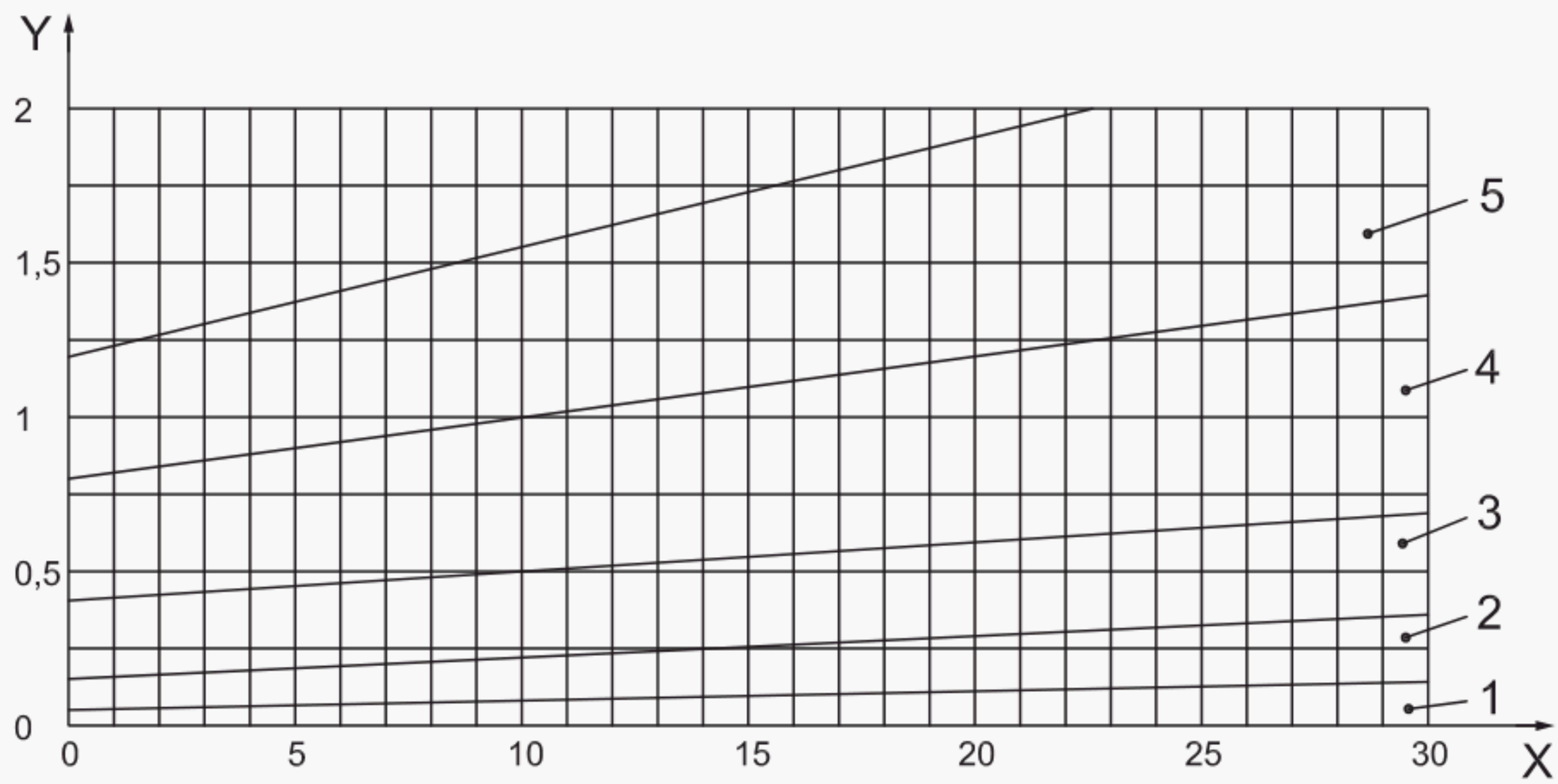

a) Perpendicularity or angularity tolerance, *u* (work piece thickness up to 30 mm)

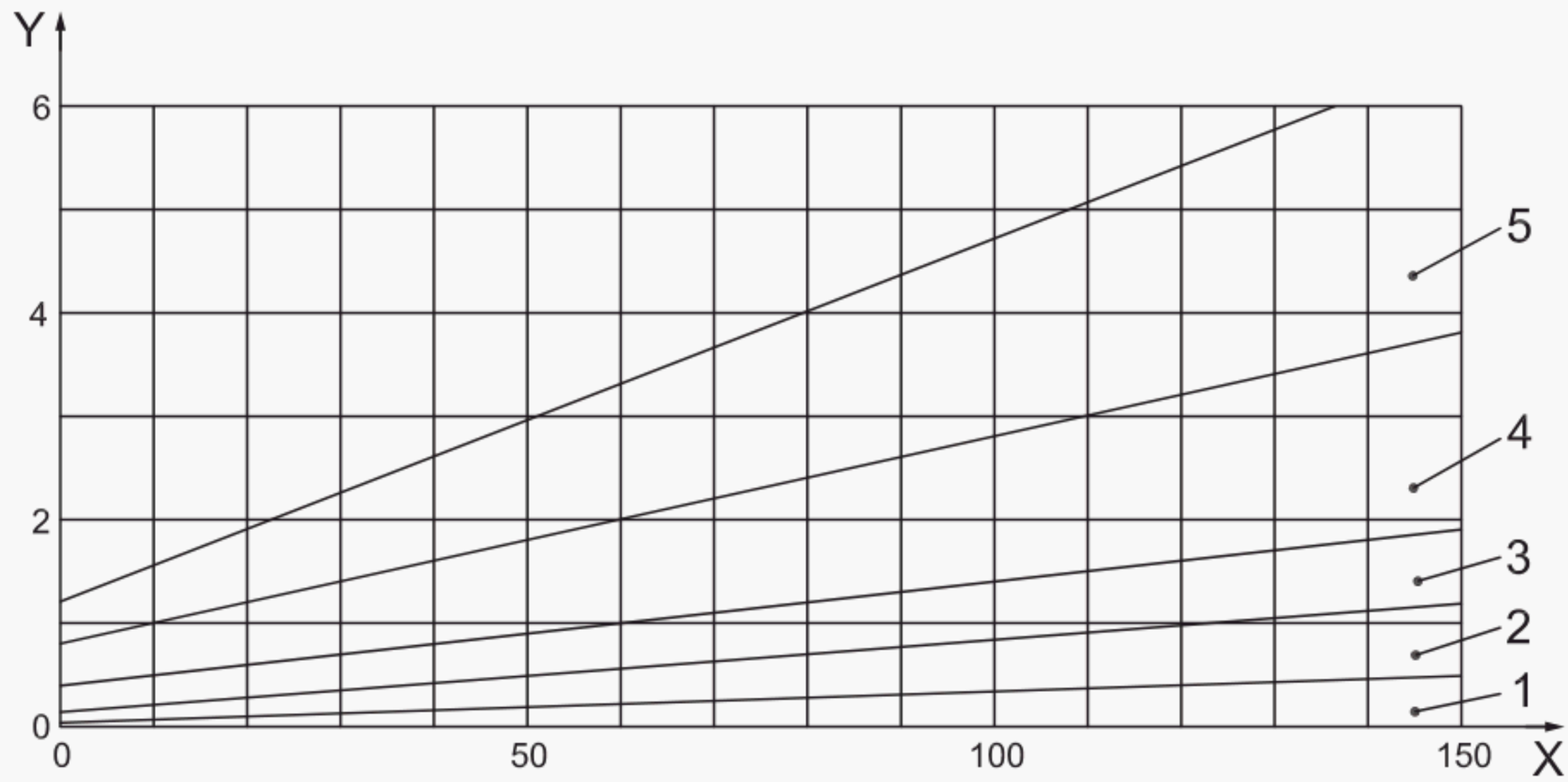

b) Perpendicularity or angularity tolerance, *u* (work piece thickness up to 150 mm)

© ISO 2017 – All rights reserved

Key

1 to 5 range (see Table 4)

X cut thickness, *e*, in mm

Y perpendicularity or angularity tolerance, *u*, in mm

Figure 12 — Perpendicularity or angularity tolerance, *u*

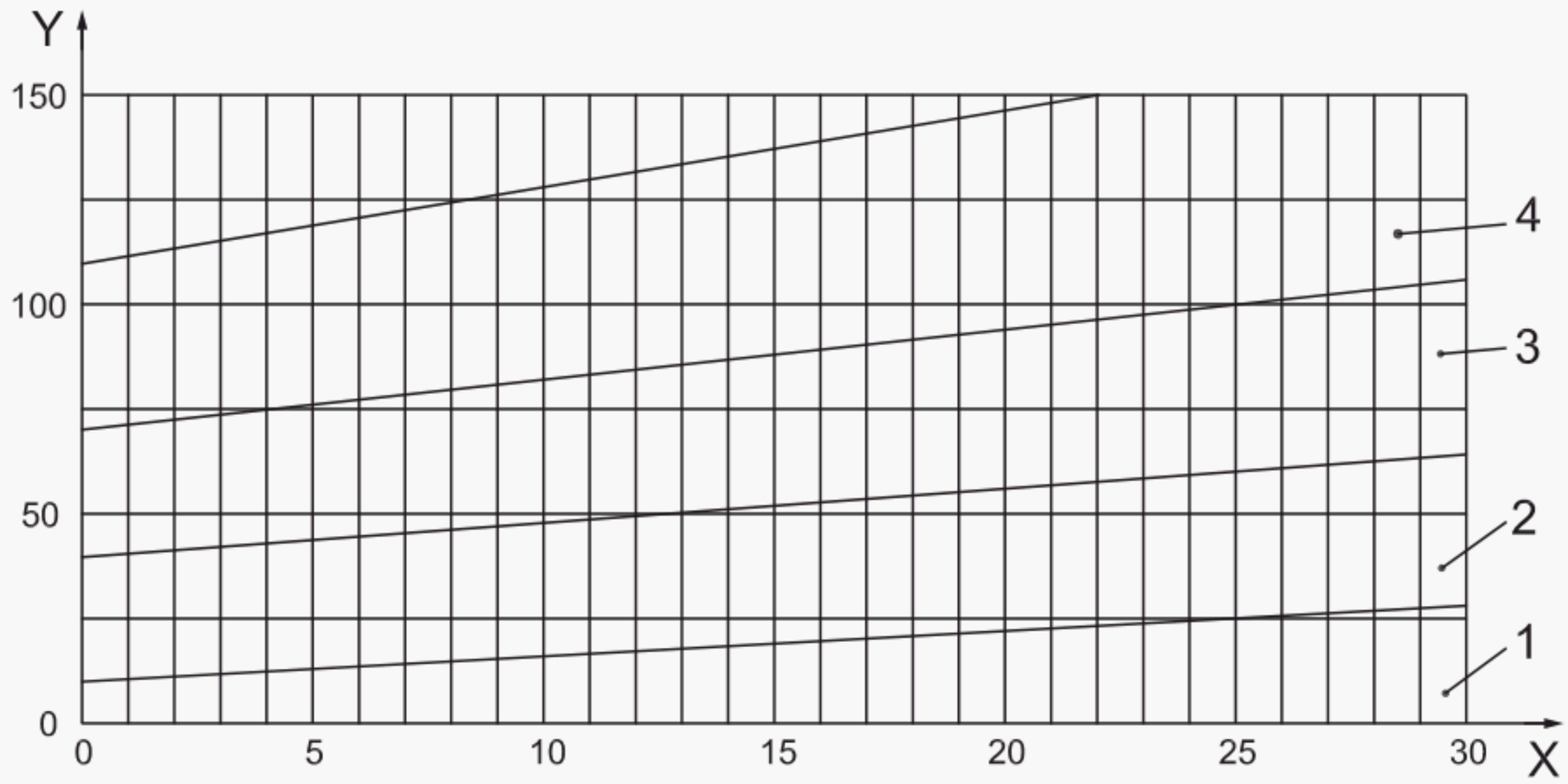

a) Mean height of the profile, *Rz*5 (work piece thickness up to 30 mm)

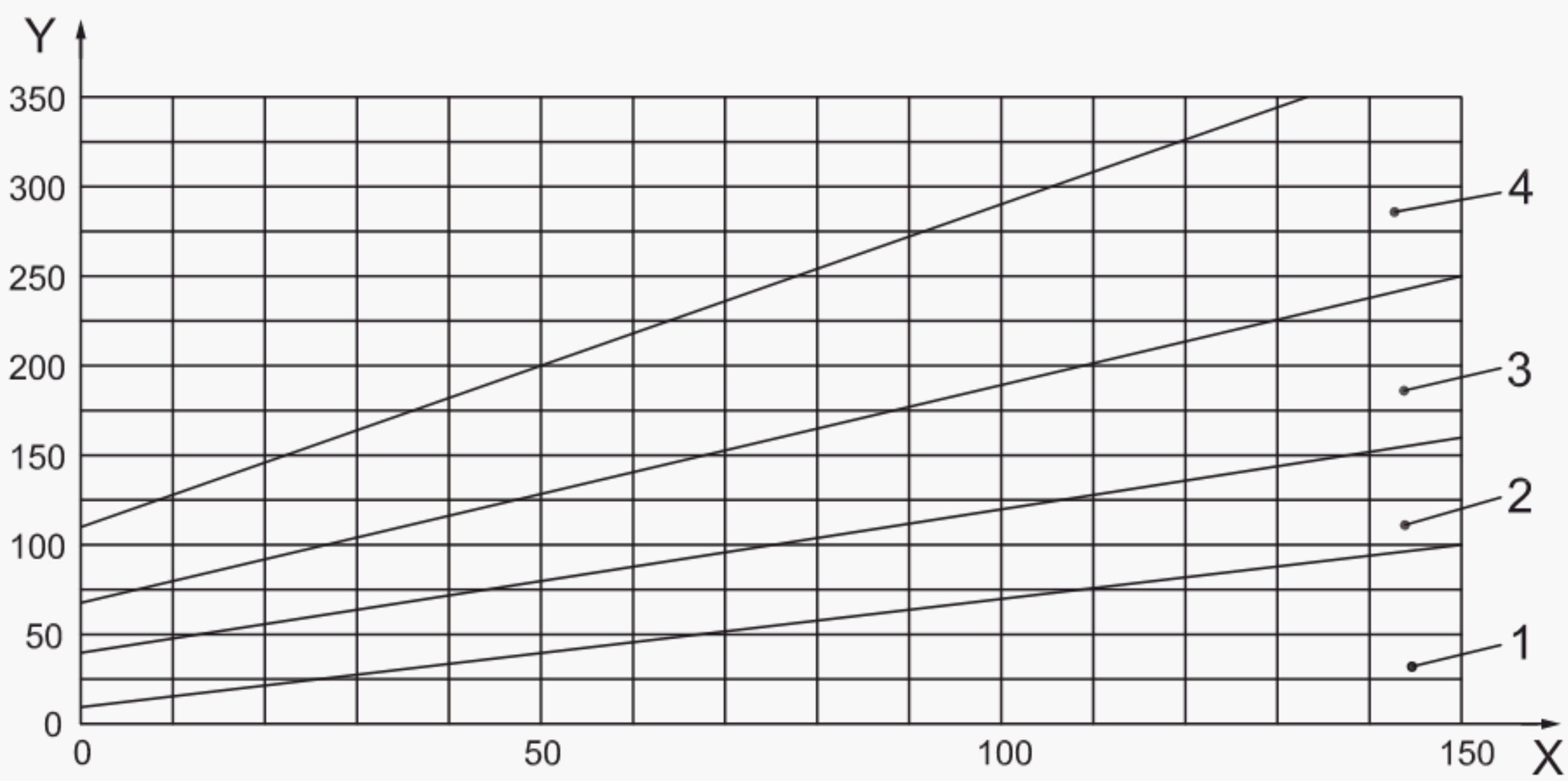

b) Mean height of the profile, *Rz*5 (work piece thickness up to 150 mm)

Key

1 to 4 range (see Table 5)

X cut thickness, *e*, in mm

Y mean height of the profile, *Rz*5

Figure 13 — Mean height of the profile, *Rz*5

© ISO 2017 – All rights reserved

Licensed copy of University of Auckland Library, Version correct as of 27/02/2017

8 Dimensional tolerances

8.1 General

The dimensions in the drawings shall be taken to be the nominal dimensions, the actual dimensions being determined on the clean surfaces of the cut. The limit deviations specified in Tables 6 and 7 shall apply to dimensions without tolerance indications, where reference is made to this document on drawings or in other documents (e.g. delivery conditions).

They are only applicable to flame cuts and plasma cuts on work pieces with a length-to-width ratio (length : width) not exceeding 4:1 and for lengths of cut (circumference) of not less than 350 mm.

For work pieces cut by flame and plasma cutting with a length-to-width ratio greater than 4:1, the limit deviations shall be specified by the manufacturer following the principles set out in this document.

For laser cutting, the maintainable dimensional tolerances depend essentially on the length-to-width ratio, the geometry and the pre-treatment conditions of the work piece.

The given classes do not apply to the start and end of the cut and can only be achieved with serviced machines and trained operators.

Material grade and the sheet temperature in comparison to the machine temperature needs to be suitable to meet the requirements of the allowed material elongation or contraction, e.g. due to the relief of residual stresses and thermal elongation during cutting.

If necessary, the limit deviations may be agreed upon separately.

The limit deviations for the cut surface quality (perpendicularity or angularity tolerance) are treated separately from the limit deviations for the dimensional deviations of the work piece in order to emphasize the different influences on the work piece.

NOTE The limit deviations do not include the deviations from perpendicularity or angularity. As the definitions for the limit deviations are based on the independence principle, it was deemed not to be necessary to explain this fact once again by the additional indication of the tolerance according to ISO 8015 on the drawing. This avoids any misunderstandings with regard to a possible elimination of the independence principle if there is no reference to ISO 8015.

If other form and location tolerances, e.g. straightness tolerance, perpendicularity tolerance in cut length and cut width direction, shall be maintained, they have to be agreed upon separately.

Licensed copy: University of Auckland Library. Version correct as of 27/02/2017

© ISO 2017 – All rights reserved

Licensed copy: University of Auckland Library, University of Auckland Library, Version correct as of 27/02/2017

Table 6 — Limit deviations for nominal dimensions tolerance class 1

Dimensions in millimetres

Work piece thickness *a*	Nominal dimensions									
	>0 to <3	≤3 to <10	≤10 to <35	≥35 to <125	≥125 to <315	≥315 to <1 000	≥1 000 to <2 000	≥2 000 to <4 000	≥4 000 to <6 000	≥6 000 to <8 000
	Limit deviations									
>0 to ≤1	±0,075	±0,10	±0,10	±0,20	±0,20	±0,30	±0,40	±0,65	±0,90	±1,60
>1 to ≤3,15	±0,10	±0,15	±0,20	±0,25	±0,25	±0,35	±0,40	±0,65	±1,00	±1,75
>3,15 to ≤6,3	±0,20	±0,20	±0,25	±0,25	±0,30	±0,40	±0,45	±0,70	±1,10	±1,90
>6,3 to ≤10	—	±0,25	±0,30	±0,30	±0,35	±0,45	±0,55	±0,75	±1,25	±2,20
>10 to ≤15	—	±0,30	±0,35	±0,40	±0,45	±0,55	±0,65	±0,85	±1,50	±2,50
>15 to ≤20	—	±0,40	±0,40	±0,45	±0,55	±0,75	±0,85	±1,2	±1,90	±2,80
>20 to ≤25	—	±0,45	±0,50	±0,60	±0,70	±0,90	±1,10	±1,60	±2,40	±3,25
>25 to ≤32	—	—	±0,70	±0,70	±0,80	±1,0	±1,6	±2,25	±3,00	±4,00
>32 to ≤50	—	—	±0,7	±0,70	±0,8	±1,0	±1,6	±2,5	±3,8	±5,0
>50 to ≤100	—	—	±1,3	±1,3	±1,4	±1,7	±2,2	±3,1	±4,4	±5,6
>100 to ≤150	—	—	±1,9	±2,0	±2,1	±2,3	±2,9	±3,8	±5,1	±6,3
>150 to ≤200	—	—	±2,6	±2,7	±2,7	±3,0	±3,6	±4,5	±5,7	±7,0
>200 to ≤250	—	—	—	—	—	±3,7	±4,2	±5,2	±6,4	±7,7
>250 to ≤300	—	—	—	—	—	±4,4	±4,9	±5,9	±7,1	±8,4

© ISO 2017 – All rights reserved

Licensed copy: University of Auckland Library, University of Auckland Library, Version correct as of 27/02/2017

Table 7 — Limit deviations for nominal dimensions tolerance class 2

Dimensions in millimetres

Work piece thickness *a*	Nominal dimensions									
	>0 to <3	≥3 to <10	≥10 to <35	≥35 to <125	≥125 to <315	≥315 to <1 000	≥1 000 to <2 000	≥2 000 to <4 000	≥4 000 to <6 000	≥6 000 to <8 000
	Limit deviations									
>0 to ≤1	±0,5	±0,6	±0,6	±0,7	±0,7	±0,8	±0,9	±0,9	—	—
>1 to ≤3,15	±0,6	±0,6	±0,7	±0,7	±0,8	±0,9	±1	±1,1	±1,4	±1,4
>3,15 to ≤6,3	±0,7	±0,8	±0,9	±0,9	±1,1	±1,2	±1,3	±1,3	±1,6	±1,6
>6,3 to ≤10	—	±1	±1,1	±1,3	±1,4	±1,5	±1,6	±1,7	±1,9	±2
>10 to ≤15	—	±1,8	±1,8	±1,8	±1,9	±2,3	±3	±4,2	±4,3	±4,5
>15 to ≤20	—	±1,8	±1,8	±1,8	±1,9	±2,3	±3	±4,2	±4,3	±4,5
>20 to ≤25	—	±1,8	±1,8	±1,8	±1,9	±2,3	±3	±4,2	±4,3	±4,5
>25 to ≤32	—	±1,8	±1,8	±1,8	±1,9	±2,3	±3	±4,2	±4,3	±4,5
>32 to ≤50	—	±1,8	±1,8	±1,8	±1,9	±2,3	±3	±4,2	±4,3	±4,5
>50 to ≤100	—	—	±2,5	±2,5	±2,6	±3	±3,7	±4,9	±5,3	±5,6
>100 to ≤150	—	—	±3,2	±3,3	±3,4	±3,7	±4,4	±5,7	±6,1	±6,4
>150 to ≤200	—	—	±4	±4	±4,1	±4,5	±5,2	±6,4	±6,8	±7,1
>200 to ≤250	—	—	—	—	—	±5,2	±5,9	±7,2	±7,6	±7,9
>250 to ≤300	—	—	—	—	—	±6	±6,7	±7,9	±8,3	±8,6

© ISO 2017 – All rights reserved

Licensed copy: University of Auckland Library, Version correct as of 27/02/2017

8.2 Dimensional tolerances on parts without finishing

8.2.1 The work piece shall fit into an assembly. The nominal dimension of the part to be cut results from the assembly dimension (= drawing dimension), reduced by the limit deviation (see Figure 14). The real dimension of a component produced by a thermal cutting process always corresponds to the greatest dimension at outside dimensions and to the smallest dimension at inside dimensions.

This kind of tolerance is normally required at welding joint preparation, as the work piece has to fit into an assembly.

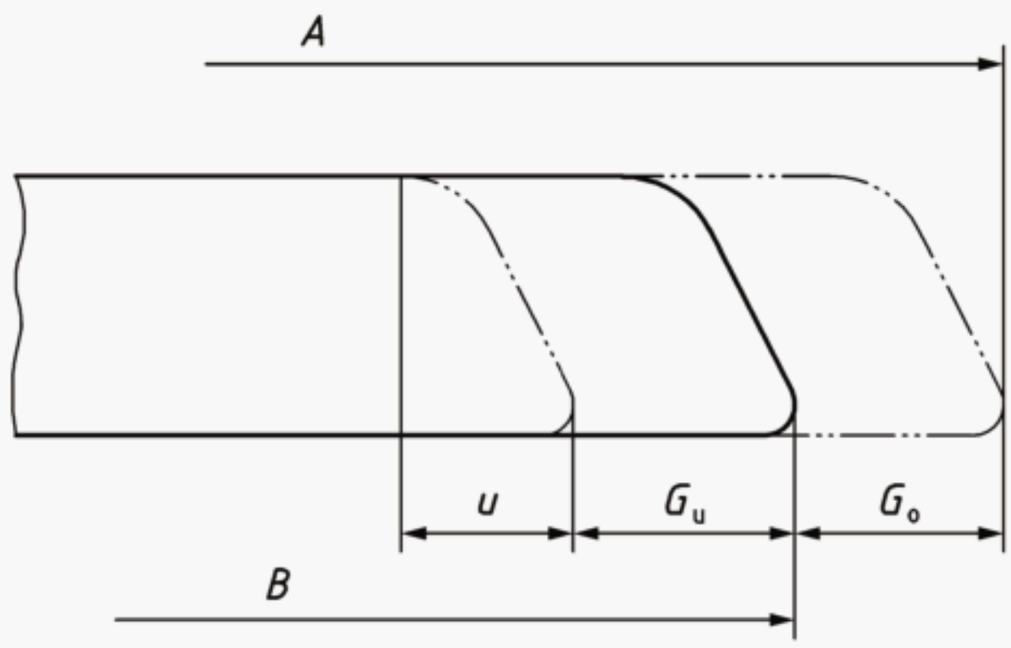

Key

A assembly dimension
B nominal dimension of the cut part
G_o upper limit deviation
G_u lower limit deviation
u perpendicularity or angularity tolerance

Figure 14 — Dimensional tolerances on parts without finishing

8.2.2 If the work piece doesn't need to fit into an assembly, the nominal dimension of the part to be cut results from the assembly dimension A (see Figure 15).

8.3 Dimensional tolerances on parts with finishing

8.3.1 General

In order to be able to meet the assembly dimensions, it is necessary, for outside dimensions of work pieces with a machining allowance, B_z, to add the perpendicularity or angularity tolerance as well as the lower limit deviation and, for inside dimensions of work pieces with a machining finishing allowance, B_z, to subtract the perpendicularity or angularity tolerance as well as the upper limit deviation (see Figure 15).

NOTE 1 The effective material to be removed depends on the machining allowance, the perpendicularity or angularity tolerance and the mean height of the profile for the relevant cutting process.

 © ISO 2017 – All rights reserved

Licensed copy: University of Auckland Library. Version correct as of 27/02/2017

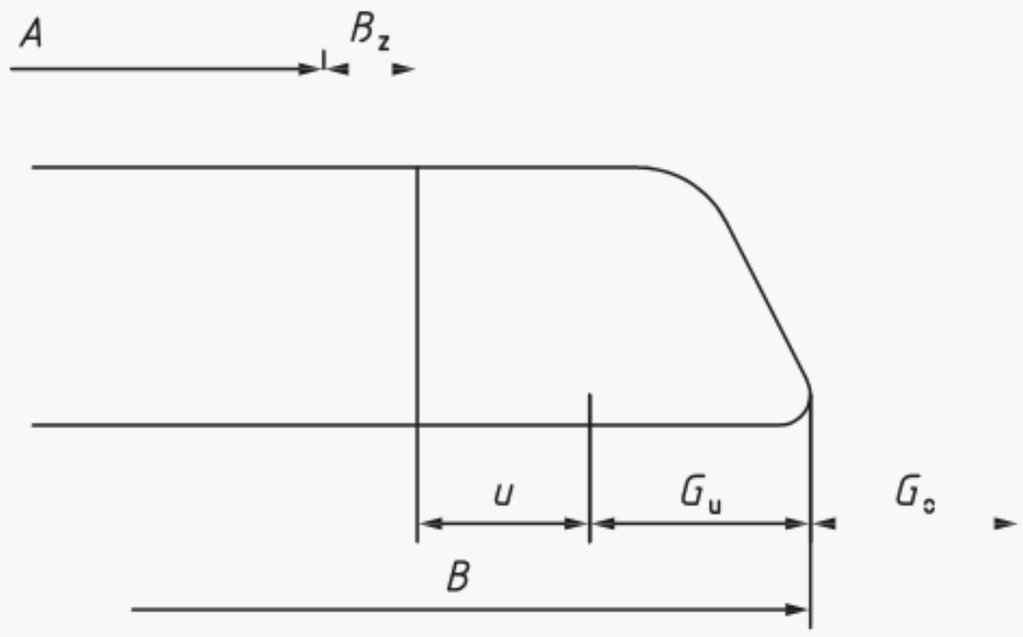

Key

A assembly dimension

B nominal dimension of the cut part

B_Z machine allowance

G_o upper limit deviation

G_u lower limit deviation

u perpendicularity

Figure 15 — Dimensional tolerances on parts with finishing (outer dimensions)

NOTE 2 B is the result of a calculation from A, B_Z, u and G_u (see text above).

8.3.2 Machining allowance

If the drawing does not bear any indication to this effect, in practice, a machining allowance depending on the sheet thickness will be provided for according to Table 8.

Table 8 — Machining allowance, B_Z

Dimensions in millimetres

Work piece thickness, a	Machining allowance for each cut surface, B_Z
≥2 ≤20	2
>20 ≤50	3
>50 ≤80	5
>80	7

9 Designation

A thermal cut in compliance with the requirements of this document is designated by listing the following elements in this order:

a) the “Thermal cut”;

b) a reference of this document, i.e. ISO 9013:2017;

c) the range number chosen for the perpendicularity or angularity tolerance (1 to 5);

d) the range number chosen for the mean height of the profile (1 to 4);

e) the class number chosen for the limit deviation for nominal dimensions (1 to 2).

© ISO 2017 – All rights reserved

EXAMPLE A thermal cut conforming to this document, of range 3 for the perpendicularity or angularity tolerance, range 1 for mean height of the profile and class 2 for limit deviations for nominal dimensions, is designated as follows:

Thermal cut ISO 9013-312:2017

10 Information in technical documentation

10.1 Indications of size

The dimensional indications in the drawings are referred to the cut work piece. In the technical documentation, standards, etc., dimensional symbols according to this document shall be used.

10.2 Indication of quality of cut surface and of tolerance class

10.2.1 On technical drawings

The quality and tolerance classes required in connection with thermal cutting shall be indicated using the following symbol, in accordance with ISO 1302 (see Figure 16):

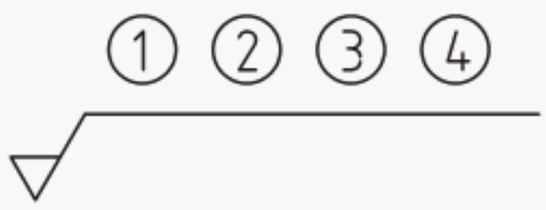

Key

1 indication of the main number of this document
2 indication of the perpendicularity or angularity tolerance, *u*, according to 7.2.2
3 indication of the mean height of the profile, *Rz*5, according to 7.2.3
4 indication of the tolerance class according to Clause 8

Figure 16

EXAMPLE A quality with the symbol 34 (range 3 for *u*, range 4 for *Rz*5) and the limit deviations for nominal dimensions tolerance class 2 (see Table 7) are required.

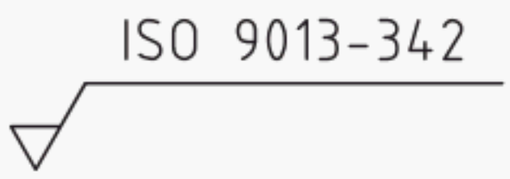

10.2.2 Title block of technical documentation

The required cut quality and the required tolerance class shall be indicated as follows, referring to the main number of this document.

EXAMPLE A quality with the symbol 34 (range 3 for *u*, range 4 for *Rz*5) and the limit deviations for nominal dimensions tolerance class 2 (see Table 7) are required:

ISO 9013-342

© ISO 2017 – All rights reserved

Licensed copy: University of Auckland Library, Version correct as of 27/02/2017

Annex A
(informative)

Achievable cut qualities for different cutting processes

This document considers the principle used to describe the quality of thermal cuts independently from the process, e.g. oxyfuel flame cutting, plasma cutting, laser cutting.

Not any quality tolerance and any geometrical product specification can be obtained by any process and any material.

With regard to all thermal cutting processes, the typical achievable qualities apply to material grades approved and recommended for the cutting process used.

Table A.1 indicates typically achievable classes for the cutting processes laser, oxyfuel flame and plasma cutting for typical 2D-cutting applications. Combined technologies, such as laser and plasma cutting or laser cutting and punching, have to be considered separately due to further application-specific tolerances. The given classes do not apply to the start and end of the cut can only be achieved with serviced machines and trained operators.

The material grade needs to be suitable to meet the requirements of the allowed material elongation or contraction e.g. due to the relief of residual stresses and thermal elongation during cutting. These material-specific effects on tolerances in addition to the machine and process accuracy must always be taken into account when considering the achievable tolerance class.

Table A.1 — Typically achievable limit deviation classes for cutting processes

Process	Class
laser cutting (up to 32 mm)	1
oxyfuel flame cutting	2
plasma cutting	2

On cut surfaces of work pieces of aluminium, titanium, magnesium, copper and their alloys, as a function of the alloy's granular structure, rippled surfaces result on which it is not possible to determine the mean height of the profile and to evaluate it in accordance with this document. Values approximately four times as high, with respect to this document, may be expected for aluminium and aluminium alloys.

With regard to all thermal cutting processes the achievable mean height of the *Rz*5 profile and perpendicularity or angularity tolerance, *u*, does not apply to the beginning of the cut, the end of the cut, small radii and sharp angles.

Figures A.1 to A.4 show average qualities achievable in mild steel using the different oxygen assisted cutting processes mentioned. However, depending on service conditions, used technology and materials grade, qualities significantly different can be obtained.

Licensed copy: University of Auckland Library. Version correct as of 27/02/2017

© ISO 2017 – All rights reserved

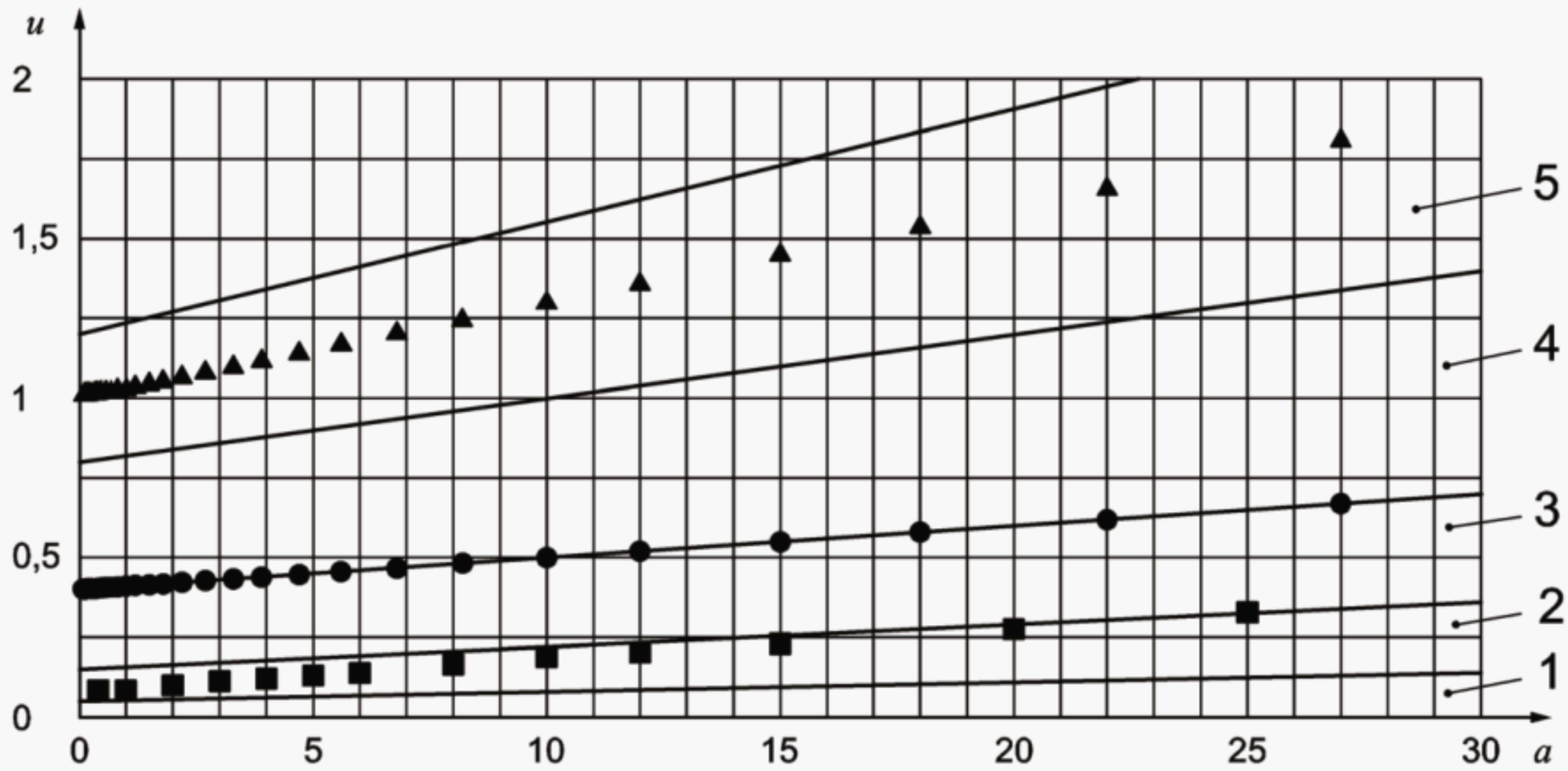

Key

1 to 5 range (see Table 5)

a cut thickness, *e*, in mm

u perpendicularity or angularity tolerance, in mm

● oxyfuel flame cutting

▲ plasma cutting

■ laser cutting

Figure A.1 — Typical cut qualities achievable with perpendicularity or angularity tolerance, *u* (work piece thickness up to 30 mm)

Licensed copy: University of Auckland Library, Version correct as of 27/02/2017

© ISO 2017 – All rights reserved

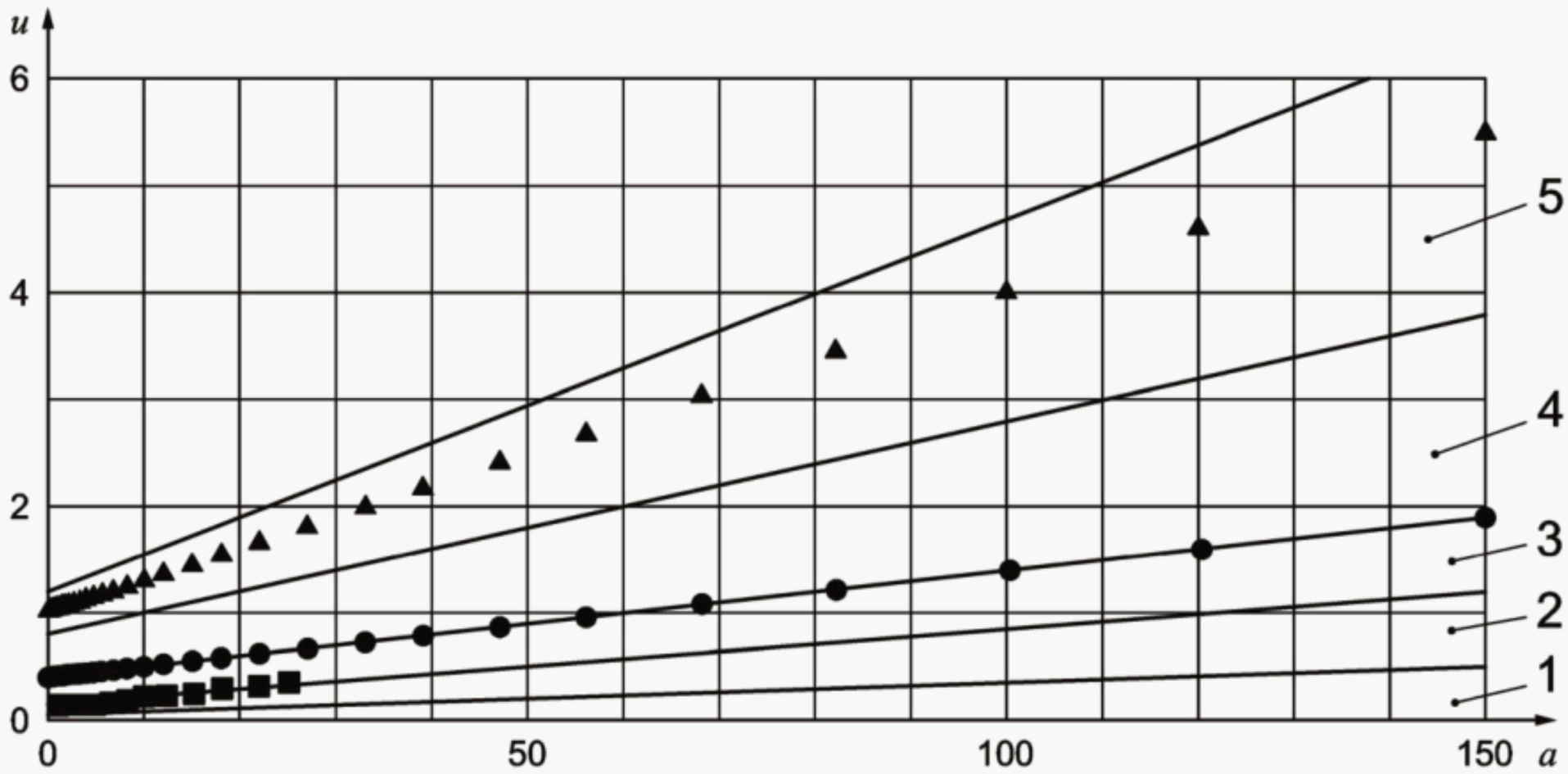

Key

1 to 5 range (see Table 5)

a cut thickness, *e*, in mm

u perpendicularity or angularity tolerance, in mm

● oxyfuel flame cutting

▲ plasma cutting

■ laser cutting

Figure A.2 — Typical cut qualities achievable with perpendicularity or angularity tolerance, *u* (work piece thickness up to 150 mm)

Licensed copy: University of Auckland Library. Version correct as of 27/02/2017

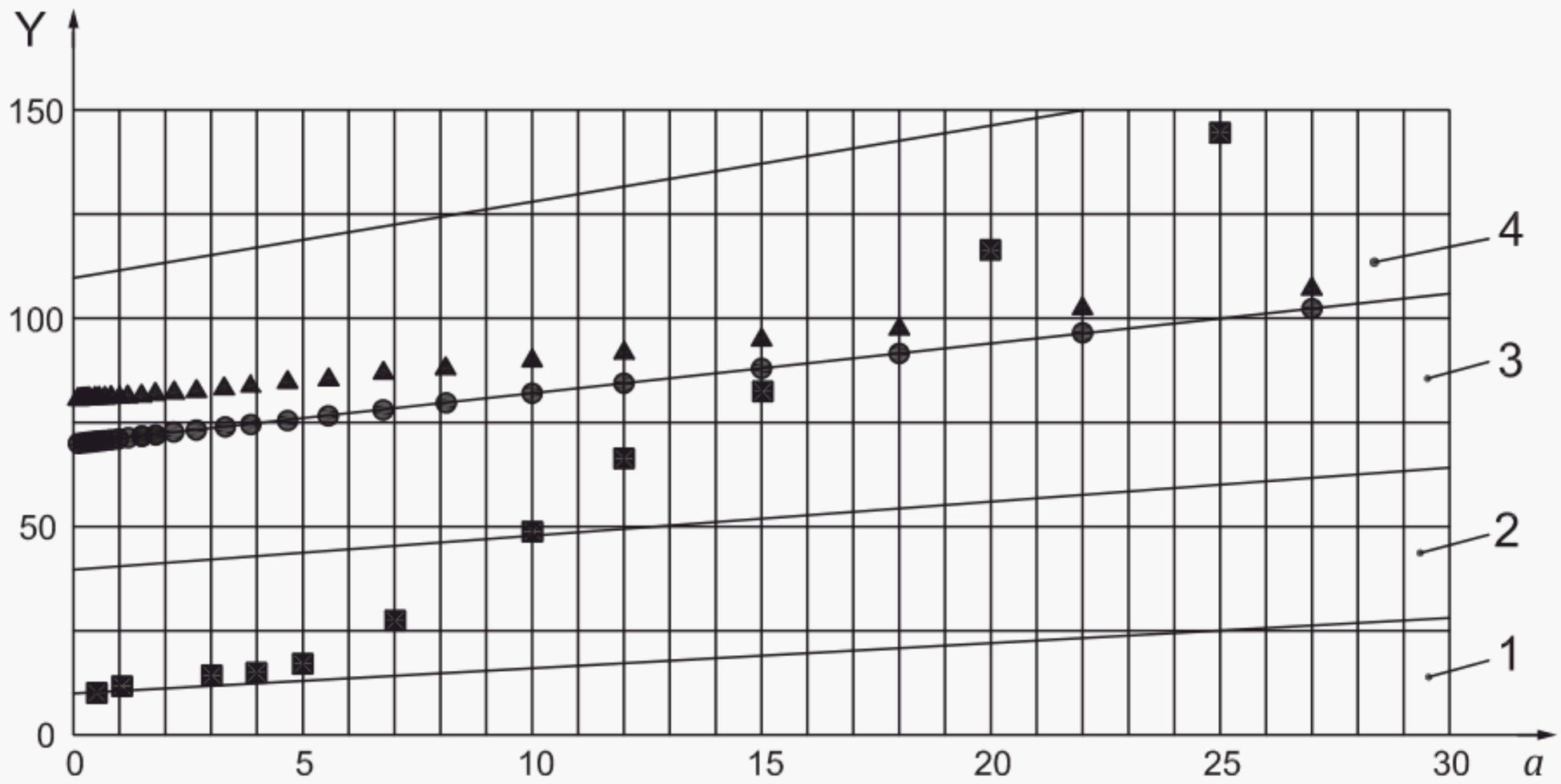

Key

1 to 4 range (see Table 5)

a cut thickness, *e*, in mm

Y mean height of the profile, *Rz*5

● oxyfuel flame cutting

▲ plasma cutting

■ laser cutting

Figure A.3 — Typical cut qualities achievable with mean height of the profile, *Rz*5 (work piece thickness up to 30 mm)

Licensed copy: University of Auckland Library. Version correct as of 27/02/2017

© ISO 2017 – All rights reserved

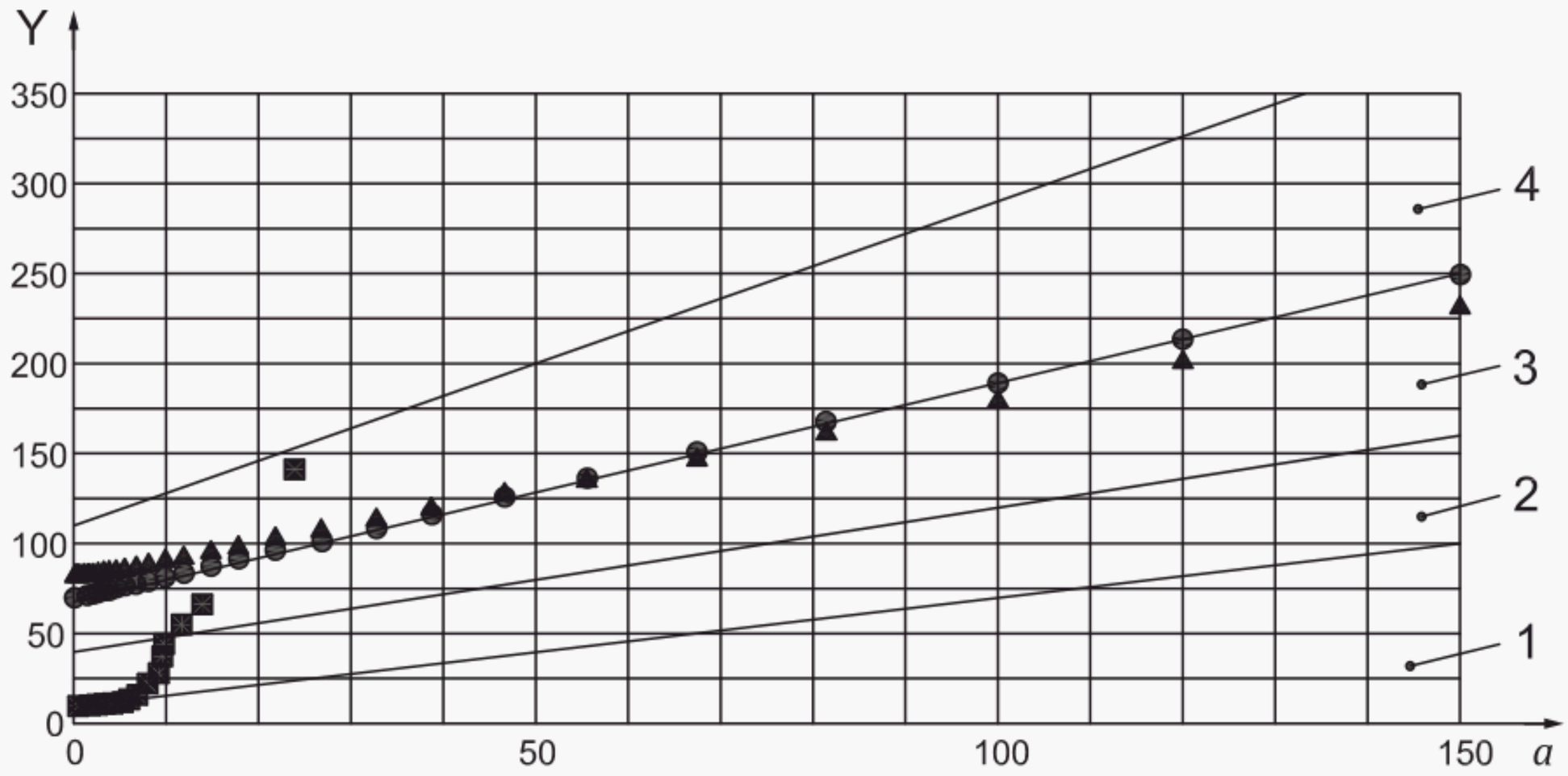

Key

1 to 4 range (see Table 5)

a cut thickness, *e*, in mm

Y mean height of the profile, *Rz*5

● oxyfuel flame cutting

▲ plasma cutting

■ laser cutting

Figure A.4 — Typical cut qualities achievable with mean height of the profile, *Rz*5 (work piece thickness up to 150 mm)

Licensed copy: University of Auckland Library, Version correct as of 27/02/2017

Annex B
(informative)

Thermal cutting — Process principles

B.1 General

This annex explains the principles of the processes.

Thermal cutting processes may be classified according to the physics of the cutting process and according to the energy source acting externally on the work piece. All processes applied in practice are mixed forms of these. They are classified according to the predominant process of burning, melting or sublimation. The reaction process continues always into the depth and, on movement, in the advance direction.

B.2 Classification according to the physics of the cutting process

B.2.1 Oxygen cutting

Oxygen cutting is a thermal cutting process in which the kerf is produced by substantial oxidation of the material, the resulting products being blown out from the kerf by a high-speed oxygen jet.

B.2.2 Fusion cutting

Fusion cutting is a thermal cutting process in which the kerf is produced by substantial melting of the material in that area, the resulting products being blown out from the kerf by a high-speed gas jet.

B.2.3 Sublimation cutting

Sublimation cutting is a thermal cutting process in which the kerf is produced by substantial evaporation of the material in that area, the resulting products being blown out from the kerf by expansion or by a high-speed gas jet.

B.3 Processes

B.3.1 Oxyfuel flame cutting

Oxygen cutting is the thermal cutting done with a fuel gas/oxygen flame and cutting oxygen. The heat released by the heating flame and the heat produced during the combustion permit continuous combustion by the cutting oxygen. The oxides produced, mixed with some molten metal, are driven out by the kinetic energy of the cutting oxygen jet. By this action, the kerf is produced.

Oxygen cutting is feasible if the following conditions are satisfied:

— the ignition temperature of the material to be cut is lower than its fusion temperature;

— the fusion temperature of the combustion products produced and of the metallic oxides, is lower than the fusion temperature of the material to be cut;

— the process produces such a quantity of heat that the material areas in the cutting direction are heated at least up to ignition temperature;

© ISO 2017 – All rights reserved

Licensed copy: University of Auckland Library. Version correct as of 27/02/2017

— the heat supply through the heating flame and the combustion of the material in the kerf exceed the heat dissipation through the heat discharge into the material and to the environment;

— the cutting slag is in such a liquid state that it can be driven out from the kerf by the cutting oxygen jet.

B.3.2 Plasma cutting

Plasma cutting is a thermal cutting process in which a constricted arc is used. Polyatomic gases dissociate in the arc and partially ionize; monoatomic gases partially ionize. The plasma beam thus generated has a high temperature and kinetic energy. It melts or partially vaporizes the material and blows it away. Thereby, the kerf is produced.

The sheet thickness which can be cut is limited since for plasma cutting, the whole heat required to liquefy the material has to be made available by the plasma cutting. With plasma cutting, a difference is made between transferred and non-transferred arc. For the plasma cutting process, the material to be cut shall be electrically conducting since it forms part of the electrical circuit. This process is suitable for low and high cutting performance, i.e. cutting of thin and thick metal sheets. The plasma gas which is used as function of the material to be cut and of the cutting thickness, is of decisive importance for the energy transfer. On plasma cutting with non-transferred arc, the material is not placed within the electrical circuit. Therefore, electrically non-conducting materials may also be cut by this process. Plasma cutting with non-transferred arc only is suitable for low-cutting performance values as the cutting nozzle serves as anode.

B.3.3 Laser cutting

Laser cutting is a thermal cutting process in which the focused laser beam supplies the energy required for the cutting, this energy then being converted into heat. The cutting process is supported by a gas jet. With laser beam cutting a difference is made between laser oxyfuel flame cutting, laser fusion cutting and laser sublimation cutting.

Dependent on the type of laser source applied in laser cutting (typically CO_2-lasers or solid state-lasers), the achievable cutting quality level can differ.

Specialized laser cutting processes can lead to significantly lower values for *Rz*5.

B.4 Materials

B.4.1 Oxyfuel flame cutting

The prerequisites indicated in B.3.1 are satisfied in the case of iron, unalloyed steel and certain alloyed steels as well as titanium and some titanium alloys. The cutting process is made more difficult by alloying and accompanying elements, (except for manganese) the difficulties increasing with rising content, e.g. of carbon, chromium, molybdenum and silicon. Therefore, among others, high-alloyed chromium-nickel or silicon steels and cast iron cannot be flame cut without applying special measures. These materials may be processed by different thermal cutting processes, e.g. by metal powder cutting or plasma cutting.

B.4.2 Plasma cutting

Nearly all fusible, electrically conducting metals, such as unalloyed and low-alloy steels, alloyed steels, nickel-based materials, copper alloys, titanium alloys, aluminium alloys and others are suitable for cutting.

B.4.3 Laser cutting

The material is suitable for laser cutting if its properties are affected in the cut areas, only to such an extent that the component maintains at least the properties required for the intended use. Suitable for cutting are unalloyed and alloyed steels, nickel-based materials, titanium alloys, aluminium alloys and others.

© ISO 2017 – All rights reserved

Licensed copy: University of Auckland Library, Version correct as of 27/02/2017

Bibliography

[1] ISO 1101, *Geometrical product specifications (GPS) — Geometrical tolerancing — Tolerances of form, orientation, location and run-out*

[2] ISO 2553, *Welding and allied processes — Symbolic representation on drawings — Welded joints*

[3] ISO 4287:1997, *Geometrical Product Specifications (GPS) — Surface texture: Profile method — Terms, definitions and surface texture parameters*

[4] ISO 17658, *Welding — Imperfections in oxyfuel flame cuts, laser beam cuts and plasma cuts — Terminology*

Licensed copy: University of Auckland Library. Version correct as of 27/02/2017

© ISO 2017 – All rights reserved

Licensed copy: University of Auckland Library. Version correct as of 27/02/2017

Licensed copy: University of Auckland Library, University of Auckland Library, Version correct as of 27/02/2017

This page deliberately left blank

Licensed copy: University of Auckland Library, University of Auckland Library, Version correct as of 27/02/2017

This page deliberately left blank

NO COPYING WITHOUT BSI PERMISSION EXCEPT AS PERMITTED BY COPYRIGHT LAW

Licensed copy: University of Auckland Library, Version correct as of 27/02/2017

British Standards Institution (BSI)

BSI is the national body responsible for preparing British Standards and other standards-related publications, information and services.

BSI is incorporated by Royal Charter. British Standards and other standardization products are published by BSI Standards Limited.

About us

We bring together business, industry, government, consumers, innovators and others to shape their combined experience and expertise into standards -based solutions.

The knowledge embodied in our standards has been carefully assembled in a dependable format and refined through our open consultation process. Organizations of all sizes and across all sectors choose standards to help them achieve their goals.

Information on standards

We can provide you with the knowledge that your organization needs to succeed. Find out more about British Standards by visiting our website at bsigroup.com/standards or contacting our Customer Services team or Knowledge Centre.

Buying standards

You can buy and download PDF versions of BSI publications, including British and adopted European and international standards, through our website at bsigroup.com/shop, where hard copies can also be purchased.

If you need international and foreign standards from other Standards Development Organizations, hard copies can be ordered from our Customer Services team.

Copyright in BSI publications

All the content in BSI publications, including British Standards, is the property of and copyrighted by BSI or some person or entity that owns copyright in the information used (such as the international standardization bodies) and has formally licensed such information to BSI for commercial publication and use.

Save for the provisions below, you may not transfer, share or disseminate any portion of the standard to any other person. You may not adapt, distribute, commercially exploit, or publicly display the standard or any portion thereof in any manner whatsoever without BSI's prior written consent.

Storing and using standards

Standards purchased in soft copy format:

- A British Standard purchased in soft copy format is licensed to a sole named user for personal or internal company use only.
- The standard may be stored on more than 1 device provided that it is accessible by the sole named user only and that only 1 copy is accessed at any one time.
- A single paper copy may be printed for personal or internal company use only.

Standards purchased in hard copy format:

- A British Standard purchased in hard copy format is for personal or internal company use only.
- It may not be further reproduced – in any format – to create an additional copy. This includes scanning of the document.

If you need more than 1 copy of the document, or if you wish to share the document on an internal network, you can save money by choosing a subscription product (see 'Subscriptions').

Reproducing extracts

For permission to reproduce content from BSI publications contact the BSI Copyright & Licensing team.

Subscriptions

Our range of subscription services are designed to make using standards easier for you. For further information on our subscription products go to bsigroup.com/subscriptions.

With **British Standards Online (BSOL)** you'll have instant access to over 55,000 British and adopted European and international standards from your desktop. It's available 24/7 and is refreshed daily so you'll always be up to date.

You can keep in touch with standards developments and receive substantial discounts on the purchase price of standards, both in single copy and subscription format, by becoming a **BSI Subscribing Member**.

PLUS is an updating service exclusive to BSI Subscribing Members. You will automatically receive the latest hard copy of your standards when they're revised or replaced.

To find out more about becoming a BSI Subscribing Member and the benefits of membership, please visit bsigroup.com/shop.

With a **Multi-User Network Licence (MUNL)** you are able to host standards publications on your intranet. Licences can cover as few or as many users as you wish. With updates supplied as soon as they're available, you can be sure your documentation is current. For further information, email subscriptions@bsigroup.com.

Revisions

Our British Standards and other publications are updated by amendment or revision.

We continually improve the quality of our products and services to benefit your business. If you find an inaccuracy or ambiguity within a British Standard or other BSI publication please inform the Knowledge Centre.

Useful Contacts

Customer Services
Tel: +44 345 086 9001
Email (orders): orders@bsigroup.com
Email (enquiries): cservices@bsigroup.com

Subscriptions
Tel: +44 345 086 9001
Email: subscriptions@bsigroup.com

Knowledge Centre
Tel: +44 20 8996 7004
Email: knowledgecentre@bsigroup.com

Copyright & Licensing
Tel: +44 20 8996 7070
Email: copyright@bsigroup.com

BSI Group Headquarters

389 Chiswick High Road London W4 4AL UK

bsi.