BS ISO 12636:2018

BSI Standards Publication

Graphic technology — Blankets for offset printing

bsi.

Copy: University of Liverpool, Version 1, 2018-03-

National foreword

This British Standard is the UK implementation of ISO 12636:2018. It supersedes BS ISO 12636:1998, which is withdrawn.

The UK participation in its preparation was entrusted to Technical Committee PAI/43, Graphic technology.

A list of organizations represented on this committee can be obtained on request to its secretary.

This publication does not purport to include all the necessary provisions of a contract. Users are responsible for its correct application.

© The British Standards Institution 2018
Published by BSI Standards Limited 2018

ISBN 978 0 580 93029 4

ICS 37.100.10

Compliance with a British Standard cannot confer immunity from legal obligations.

This British Standard was published under the authority of the Standards Policy and Strategy Committee on 31 January 2018.

Amendments/corrigenda issued since publication

Date	Text affected

Licensed copy: University of Liverpool, Version correct as of 1/1/2018

INTERNATIONAL STANDARD

ISO 12636

Second edition
2018-01-01

Graphic technology — Blankets for offset printing

Technologie graphique — Blanchets pour impression offset

Reference number
ISO 12636:2018(E)

© ISO 2018

Licensed to University of Liverpool, University of Liverpool

Licensed copy: University of Liverpool, Version consolidated on 1-1-2018

COPYRIGHT PROTECTED DOCUMENT

© ISO 2018, Published in Switzerland

All rights reserved. Unless otherwise specified, no part of this publication may be reproduced or utilized otherwise in any form or by any means, electronic or mechanical, including photocopying, or posting on the internet or an intranet, without prior written permission. Permission can be requested from either ISO at the address below or ISO's member body in the country of the requester.

ISO copyright office
Ch. de Blandonnet 8 • CP 401
CH-1214 Vernier, Geneva, Switzerland
Tel. +41 22 749 01 11
Fax +41 22 749 09 47
copyright@iso.org
www.iso.org

Contents

Page

Foreword ..... **iv**
Introduction ..... **v**
1 Scope **1**
2 Normative references **1**
3 Terms and definitions **1**
4 Requirements **2**
4.1 Information 2
4.2 Dimension 3
4.2.1 Thickness 3
4.2.2 Mean thickness 3
4.2.3 Accuracy of width and length 3
4.2.4 Plan view 4
4.3 Elongation 4
4.4 Tensile strength 4
4.5 Compressibility 4
4.6 Thickness change 4
4.6.1 Swelling and/or shrinkage due to printing ink component 4
4.6.2 Swelling and/or shrinkage due to blanket washes 4
4.7 Cut blanket markings 4
5 Test methods **4**
5.1 General 4
5.2 Thickness 4
5.3 Elongation 5
5.4 Tensile strength 5
5.5 Load at specific deflection 5
5.6 Compressibility — Deflection 6
5.7 Compressibility — Indentation 6
5.8 Surface texture 8
5.9 Thickness change 9
5.9.1 Swelling or shrinkage after exposure to a test liquid 9
5.9.2 Swelling or shrinkage after recovery from exposure to a test liquid 9
5.9.3 Exposure conditions for printing ink ingredients 10
5.9.4 Exposure conditions for washes 10
5.9.5 Report 10
Bibliography **11**

Licensed Copy: University of Liverpool, Version correct as of 10/12/2018

Foreword

ISO (the International Organization for Standardization) is a worldwide federation of national standards bodies (ISO member bodies). The work of preparing International Standards is normally carried out through ISO technical committees. Each member body interested in a subject for which a technical committee has been established has the right to be represented on that committee. International organizations, governmental and non-governmental, in liaison with ISO, also take part in the work. ISO collaborates closely with the International Electrotechnical Commission (IEC) on all matters of electrotechnical standardization.

The procedures used to develop this document and those intended for its further maintenance are described in the ISO/IEC Directives, Part 1. In particular the different approval criteria needed for the different types of ISO documents should be noted. This document was drafted in accordance with the editorial rules of the ISO/IEC Directives, Part 2 (see www.iso.org/directives).

Attention is drawn to the possibility that some of the elements of this document may be the subject of patent rights. ISO shall not be held responsible for identifying any or all such patent rights. Details of any patent rights identified during the development of the document will be in the Introduction and/or on the ISO list of patent declarations received (see www.iso.org/patents).

Any trade name used in this document is information given for the convenience of users and does not constitute an endorsement.

For an explanation on the voluntary nature of standards, the meaning of ISO specific terms and expressions related to conformity assessment, as well as information about ISO's adherence to the World Trade Organization (WTO) principles in the Technical Barriers to Trade (TBT) see the following URL: www.iso.org/iso/foreword.html.

This document was prepared by Technical Committee ISO/TC 130, *Graphic technology*.

This second edition cancels and replaces the first edition (ISO 12636:1998), which has been technically revised.

Licensed copy: University of Liverpool, Version correct as of 15/10/2018

© ISO 2018 – All rights reserved

Introduction

The blanket is an essential part of every offset printing press. Its properties exert a profound influence on the mechanical conditions within the press and the visual characteristics of the prints produced. It is therefore useful to provide test methods, unified data, and tolerances for some essential properties of the blankets. This permits the suppliers to state properties of blanket types in a standardized and universally understood manner. It also helps the printer to select the appropriate blanket type for a particular press type or press condition. A further benefit is that the design of printing presses can be based on blanket data resulting from unified test methods.

Licensed copy: University of Liverpool, Version correct as of 15/02/2018

© ISO 2018 – All rights reserved

Eisenhood
Copy: University of Liverpool, Vorlesungsbibliothek

This page deliberately left blank

Graphic technology — Blankets for offset printing

1 Scope

This document defines vocabulary and specifies test methods, characteristics, ordering and labelling information for blankets for offset printing. This document does not apply to un-tensioned or unclamped blankets for offset printing, nor offset printing sleeves used on gapless presses.

2 Normative references

There are no normative references in this document.

3 Terms and definitions

For the purposes of this document, the following terms and definitions apply.

ISO and IEC maintain terminological databases for use in standardization at the following addresses:

— ISO Online browsing platform: available at https://www.iso.org/obp

— IEC Electropedia: available at http://www.electropedia.org/

3.1
across cylinder direction
direction of the side of the *blanket* (3.4) as intended to be applied perpendicular to the direction of rotation

3.2
around-the-cylinder direction
direction of the side of the *blanket* (3.4) as intended to be applied in the direction of the rotation

3.3
average thickness
mean of thickness measurements

3.4
blanket
composite body, consisting of coated carrier material, e.g. fabric, used for transfer of the printing ink from the form onto the material to be printed on, e.g. for offset printing

3.5
load at specific deflection
average stress of a *blanket* (3.4) under compressive force

Note 1 to entry: It is expressed in kPa.

3.6
compressibility–deflection
average thickness reduction of a *blanket* (3.4) measured under a specific pressure

Note 1 to entry: It is expressed in millimetres.

3.7
compressibility–indentation
average depth of impression, I, in a *blanket* (3.4) measured under a specific pressure

Note 1 to entry: It is expressed in millimetres or as percentage indentation, I_p.

© ISO 2018 – All rights reserved

Licensed copy: University of Liverpool, Version correct as of 15/12/2018

3.8
elongation
increase of the dimension in the *around-the-cylinder direction* (3.2) of a *blanket* (3.4) under longitudinal stress

Note 1 to entry: It is expressed in percentage of the length at a specified force per width.

3.9
packing
underlay material placed under the *blanket* (3.4)

3.10
printing surface
side of the *blanket* (3.4) that is used for the transfer of printing ink

3.11
shrinkage
decrease in thickness due to mechanical forces and decrease in all dimensions due to exposure of the blanket printing surface to a liquid

Note 1 to entry: It is expressed as a percentage of the original blanket thickness, or as an absolute thickness decrease in millimetres.

3.12
sizes
dimensions (thickness, width and length) of a cut ready-to-use *blanket* (3.4)

3.13
swelling
increase in thickness due to exposure of the blanket printing surface to a liquid

Note 1 to entry: It is expressed as a percentage of the original blanket thickness or as an absolute thickness increase in millimetres.

3.14
tensile strength
force per unit width required for breaking a *blanket* (3.4) under longitudinal stress in the *around-the-cylinder direction* (3.2)

3.15
thickness variation
difference between the greatest and the smallest thickness value in millimetres

3.16
surface texture
average roughness of blanket surface, R_a

Note 1 to entry: It is expressed in micrometres.

4 Requirements

4.1 Information

The compatibility of the blankets to either conventional, dual use or ultraviolet (UV) inks shall be documented.

The overall hardness and the microhardness are not specified in this document. They are the choice of the manufacturer. If the manufacturer provides such information, the test method shall also be documented and mentioned with the results.

 © ISO 2018 – All rights reserved

The printing surface material formulation and surface texture are the choice of the manufacturer and may be stated in technical descriptions by the supplier. The surface texture may vary, e.g. cast (moulded) or ground (buffed). No specification for surface texture is given in this document. The measurement method is based on 5.8. The use of data to market products is the choice of the manufacturer.

The nominal (mean) thickness shall be stated in technical descriptions when ordered.

Compressibility information should be given to the user and the test method shall be indicated.

When testing the compatibility of blanket washes and an offset printing blanket, it is the option of the blanket manufacturer to report the test results using the test method according to 5.9 for each property.

On the non-printing side of the cut-to-size blanket, the following should be reported:

a) blanket dimensions (average actual thickness, width and length) indicating which dimension is the around-the-cylinder direction. If the recorded thickness is nominal, it shall be stated;

b) the batch control number;

c) the name of the manufacturer or the supplier and the blanket brand or trade name.

4.2 Dimension

4.2.1 Thickness

The test method according to 5.2 shall be used. For applications with packing, the nominal thickness should be 1,68 mm or 1,95 mm. For applications without packing, the nominal thickness should be agreed upon between the supplier and the user of the product.

The thickness variations of blankets with an area not in excess of 1,5 m^2 shall be less than ±0,02 mm. Those of greater sizes shall be less than ±0,03 mm. No individual thickness measurement shall yield a value which deviates more than 0,05 mm from the ordered thickness.

4.2.2 Mean thickness

Mean thickness is an average of four measurements of a cut blanket where the measurements have been made on the points indicated in Figure 1, namely on two diagonally opposed corners and one each at the middle of the two sides that are perpendicular to each other within a right triangle.

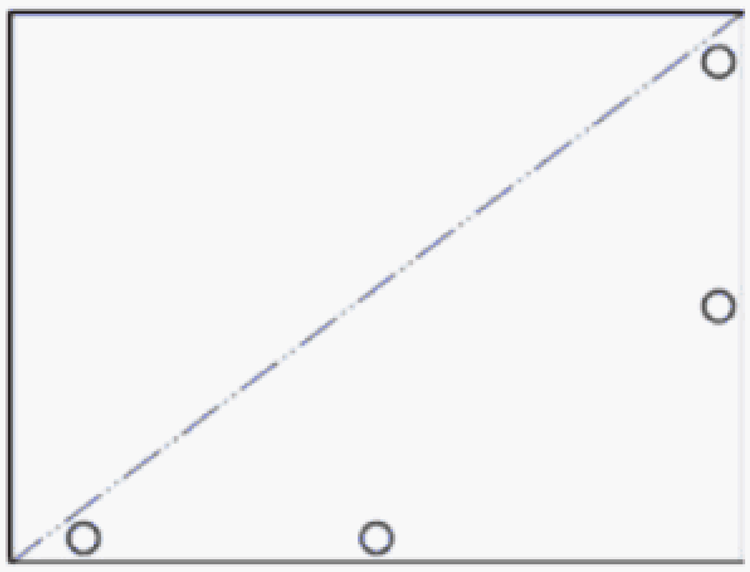

Figure 1 — Thickness measurement points

4.2.3 Accuracy of width and length

If one of the sides is 1 m or less, the tolerance shall be ±3 mm; otherwise, it shall be ±4 mm.

© ISO 2018 – All rights reserved

Copy: University of Liverpool, Version correct at 07/12/2018

4.2.4 Plan view

The sides of the blanket shall form right angles. The difference between the length of the diagonals and the length of any two parallel sides shall not exceed 0,5 %.

4.3 Elongation

The elongation, *E*, shall be less than 1,5 %. The test method according to 5.3 shall be used or any other method where results can be correlated to those of the test method defined in 5.3.

4.4 Tensile strength

For all blankets with a thickness of 1,68 mm or more, the tensile strength shall be greater than 40 N/mm. The test method according to 5.4 shall be used or any other method where results can be correlated to those of the test method defined in 5.4. For blankets of lower thickness, no specification is given.

4.5 Compressibility

No specification is given. The test method according to either 5.6 or 5.7 shall be used. Alternatively, load at specific deflection (the test method according to 5.5) may be used.

4.6 Thickness change

4.6.1 Swelling and/or shrinkage due to printing ink component

The thickness change, ΔT, due to exposure to printing ink ingredients, shall not exceed 4 % maximum swelling or 2 % maximum shrinkage. The test method according to 5.9 shall be used for each property.

NOTE The blanket printing surface is typically designed for use with specific ink types. For example, UV blankets are designed for use with UV-cured inks.

4.6.2 Swelling and/or shrinkage due to blanket washes

Blanket washes should be tested for compatibility with the blanket according to the test method given in 5.9.

NOTE The choice of a proper wash is a difficult decision due to efficiency versus safety and environmental needs.

4.7 Cut blanket markings

The method and format for marking is the choice of the manufacturer.

5 Test methods

5.1 General

The testing environment should be (23 ± 2) °C. Relative humidity is (50 ± 5) % Rh.

5.2 Thickness

Place the blanket between two parallel flat circular disks of 100 mm^2 to 200 mm^2 area. Load the disks with a force that produces a pressure of (60 ± 5) kPa. Measure the gap between the disks in millimetres. Other methods, e.g. continuous ones, may be used instead if the results can be correlated to those of the method specified.

 © ISO 2018 – All rights reserved

Copy: University of Liverpool, Version correct as of 16/08/2018

5.3 Elongation

Cut a 50 mm by 350 mm (minimum) sample from the blanket with the long direction parallel to the around-the-cylinder direction. Apply to the sample two benchmarks 250 mm apart. Clamp the shorter sides of the sample in a tensile testing apparatus with a jaw separation of 300 mm (minimum), and apply a static line force of 10 N/mm. After 10 min dwell time, determine the distance, *L*, between the benchmarks under load. Calculate the percentage elongation using Formula (1):

$$E = \frac{L - L_0}{L_0} \times 100\,\% \tag{1}$$

where

L_0 is equal to 250 mm benchmarks;

L is the length after 10 min under load.

5.4 Tensile strength

Cut a 50 mm by 300 mm (minimum) sample from the blanket with the long direction parallel to the around-the-cylinder direction. Clamp the shorter sides of the sample into a tensile strength testing apparatus with a minimum jaw separation of 200 mm. Apply the load with a jaw separation speed of 50 mm/min. Increase the load till the break occurs; read the force at break. The tensile strength is expressed in N/mm.

5.5 Load at specific deflection

a) Load at specific deflection is expressed as an average of stress (expressed in kPa).

b) Apparatus: continuous loading apparatus (tensometer) utilizing parallel flat surfaces and a circular load disk of 100 mm^2 to 1 000 mm^2.

c) Sample size is the same as the load disk.

d) Place the sample face toward the load disk and compress the sample to a preload of (60 ± 5) kPa.

e) Head speed: 1 mm/min.

f) Compress the sample to a deflection of 0,22 mm to 0,25 mm and immediately deload the sample to 0 kPa.

g) Reload the sample to (60 ± 5) kPa and repeat the deflection cycle two more times, recording the stress (in kPa) on the third cycle at 0,05 mm, 0,10 mm, 0,15 mm, and 0,20 mm. These recorded values are the

   — load at 0,05 mm,

   — load at 0,10 mm,

   — load at 0,15 mm, and

   — load at 0,20 mm.

h) Report values from an average of four samples.

Due to the machine deflection inherent in all test equipment, care should be taken to compensate for this deflection when reporting results. This deflection may be in the fixtures (e.g. compression cage) as well as the load cell. A test with the 100 mm^2 circular load disk between the parallel flat faces is run to determine the deflection of the testing system at different loads (stress). The stress-strain curve is used to correct this instrument deflection in order to indicate the correct deflection at specific load (stress).

© ISO 2018 – All rights reserved

Licensed copy: University of Liverpool, Version correct as of 1/1/2018

5.6 Compressibility — Deflection

a) Indication of blanket compressibility is expressed as an absolute deflection at a pre-determined pressure of 2 000 kPa.

b) Apparatus: continuous loading apparatus (tensometer).

c) Use a compression load cell with parallel flat surfaces or a compression cage (maximum diameter is 100 mm) (see Figure 2).

d) Sample size: (700 ± 10) mm^2, disk-shaped.

e) Head speed: 1 mm/min.

f) Zero point: (60 ± 5) kPa.

g) Compress the sample until a load of 2 060 kPa is reached, recording the deflection at the first and fifth cycles at 1 060 kPa and 2 060 kPa.

h) Report the fifth cycle deflection values at 1 060 kPa and 2 060 kPa from an average of four samples.

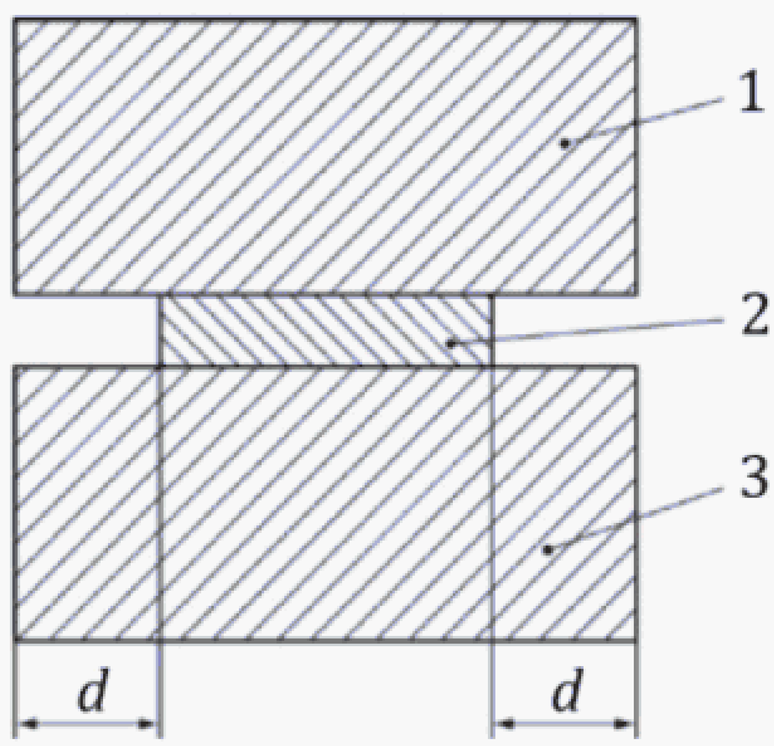

Key

1 upper face of compression apparatus
2 circular sample of 700 mm^2
3 lower face
d distance of 10 mm (minimum)

Figure 2 — Compressibility — Deflection (not to scale)

Due to machine deflection inherent in all test equipment, care should be taken to compensate for this deflection when reporting results. This deflection may be in the fixtures (e.g. compression cage) as well as the load cell. A test with a flat non-compressible circular disk (700 ± 10) mm^2 is run to determine the deflection of the testing system at different loads. This disk should be of minimum thickness such that all force is borne by the disk during the test. Suggested material for this disk is brass or steel. The stress-strain curve is used to correct for this instrument deflection in order to indicate the correct blanket compressibility.

5.7 Compressibility — Indentation

a) Indication of blanket compressibility is expressed as an absolute indentation at a pre-determined pressure of 1 000 kPa.

b) Apparatus: continuous loading apparatus (tensometer) utilizing parallel flat surfaces and a circular load disk of 100 mm^2 (see Figure 3).

 © ISO 2018 – All rights reserved

c) Sample size: (700 ± 10) mm².

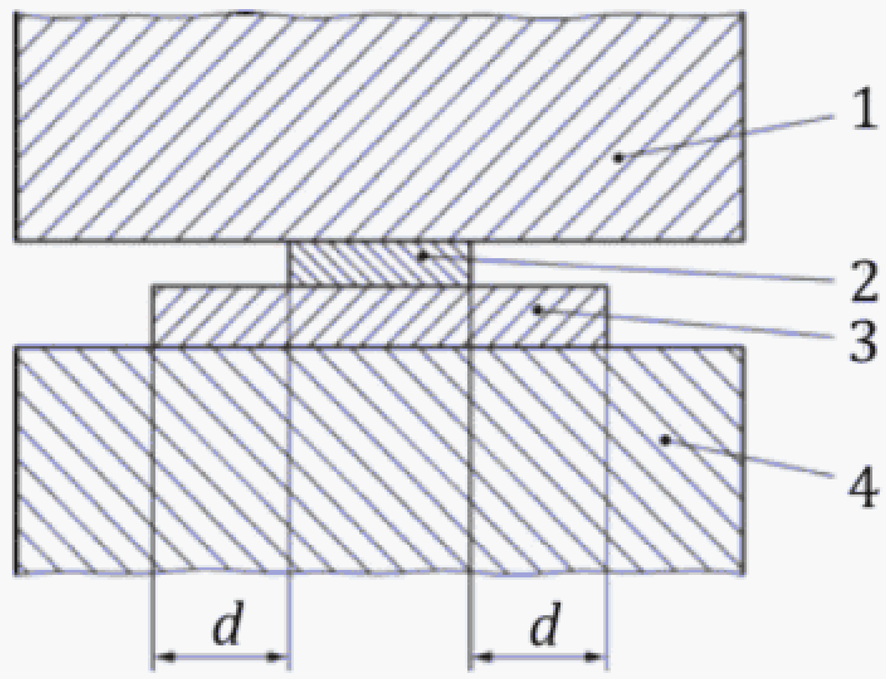

Key

1 upper face of compression apparatus
2 circular load disk of 100 mm²
3 sample
4 lower face
d distance of 9 mm (minimum)

Figure 3 — Compressibility — Indentation (not to scale)

d) Zero point: (60 ± 5) kPa.

e) Record the distance between the load disk and the lower face in millimetres at the preload of (60 ± 5) kPa. The recorded value is the initial preload thickness, D_0 (see Figure 4).

f) Head speed: 1 mm/min.

g) Compress the sample until a load of 1 060 kPa is reached, recording the distance between the load disk and the lower face in millimetres. The recorded value is the indented thickness, D_1.

h) Repeat the loading three times, then deload to 60 kPa, recording the distance between the load disk and the lower face in millimetres. The recorded value is the fifth cycle preload thickness, D_{04}.

i) Compress the sample a fifth time until a load of 1 060 kPa is reached and record the distance between the load disk and the lower face in millimetres. The recorded value is the indented thickness, D_5 (see Figure 4).

j) Report values from an average of four samples.

Copy: University of Liverpool, Version correct as of 18/07/2018

© ISO 2018 – All rights reserved

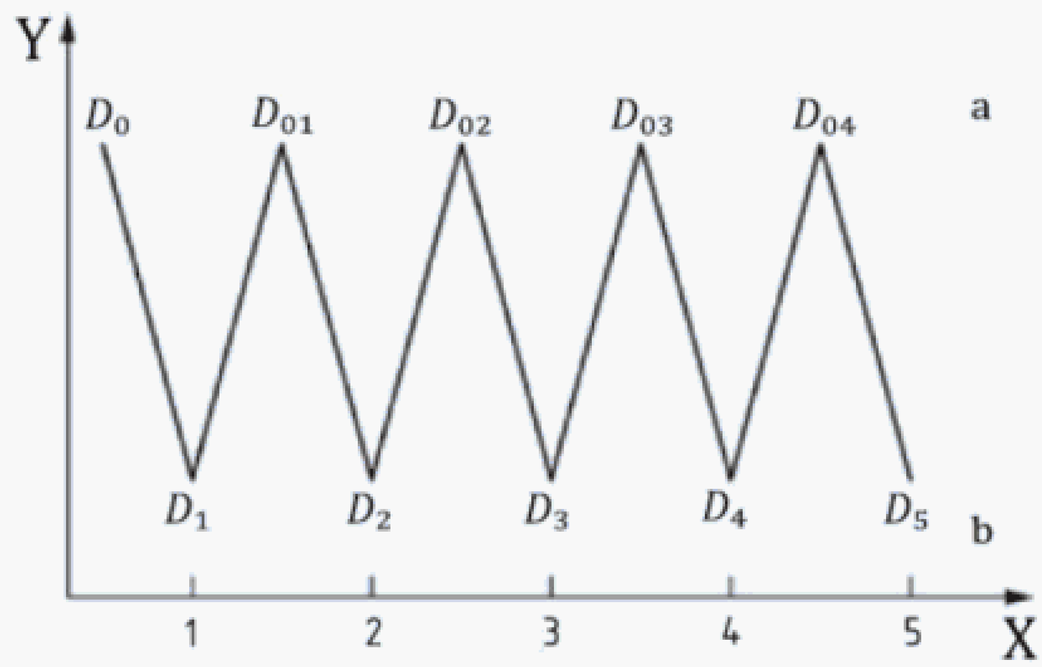

Key

Y thickness

X number of load cycles

a Unloaded thickness.

b Loaded thickness.

Figure 4 — Test procedure for Compressibility — Indentation

Report the following:

— the initial preload thickness, D_0;

— the absolute indentation, I_1, at the first loading, D_0 to D_1;

— the absolute indentation, I_5, at the fifth loading, D_{04} to D_5.

Alternatively, the percentage indentation, I_p, can be reported; then, the percentage indentation at the first loading is shown in Formula (2):

$$I_{p1} = \frac{D_0 - D_1}{D_0} \times 100\% \tag{2}$$

The percentage indentation at the fifth loading is shown in Formula (3):

$$I_{p5} = \frac{D_{04} - D_5}{D_{04}} \times 100\% \tag{3}$$

Due to the machine deflection inherent in all test equipment, care should be taken to compensate for this deflection when reporting results. This deflection may be in the fixtures (e.g. compression cage) as well as the load cell. A test with the 100 mm^2 circular load disk between the parallel flat faces is run to determine the deflection of the testing system at different loads. The stress-strain curve is used to correct this instrument deflection in order to indicate the correct blanket indentation.

5.8 Surface texture

The surface texture of a blanket will be measured with a surface roughness indicator (also referred to as a profilometer). Calculation is based on ISO 4287.

The size of the sample shall be sufficient to measure by the indicator.

Measure and record R_a from three samples. Report the median (i.e. middle) value of the three results. Additional roughness metrics may be reported at the choice of the manufacturer.

The direction of measurement of the blanket sample (across cylinder direction or around-the-cylinder direction) shall be reported.

 © ISO 2018 – All rights reserved

Licensed to University of Liverpool, Version correct as of

Licensed to Liverpool, University of Liverpool, University of Liverpool as of 10/12/2018

5.9 Thickness change

5.9.1 Swelling or shrinkage after exposure to a test liquid

Cut a 50 mm diameter or 50 mm square sample from a blanket. Measure the initial thickness, T_0, of the blanket using the test method according to 5.2. Clamp the sample into a test fixture which protects the edge and non-printing surface from contact with the test liquid (see Figure 5). The test liquid shall be at least 3 mm deep. Expose the printing surface to the test liquid for a period t at a temperature, ϑ (5.9.3 for inks and 5.9.4 for washes). Remove the sample from the test fixture, clean off excess liquid and measure the thickness, T_1, using the method as specified in 5.2. Calculate the percentage thickness change using Formula (4):

$$\Delta T_1 = \frac{T_1 - T_0}{T_0} \times 100\% \tag{4}$$

where

ΔT_1 is the percentage change after time, t;
T_1 is the thickness after time, t;
T_0 is the initial thickness.

The absolute thickness change may also be expressed in millimetres.

Dimensions in millimetres

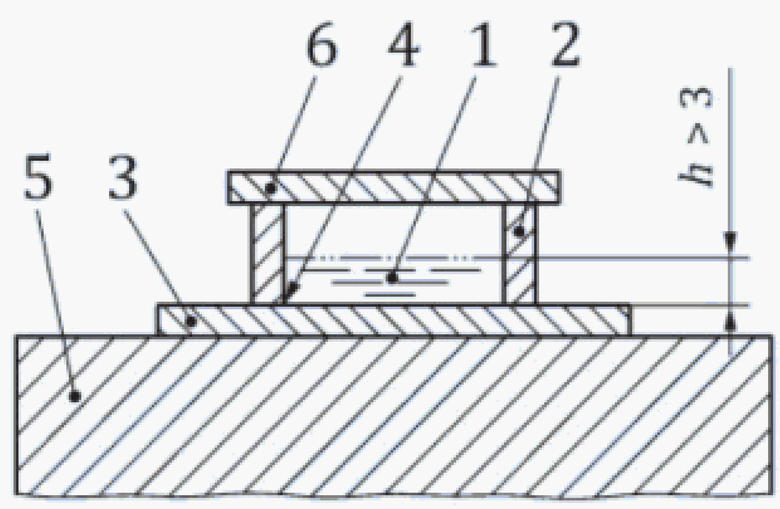

Key

1 test liquid
2 upper test fixture
3 blanket sample
4 sealing point
5 lower test fixture
6 cover

Figure 5 — Test liquid exposure fixture (not to scale)

5.9.2 Swelling or shrinkage after recovery from exposure to a test liquid

Let the sample remain at a temperature of (23 ± 2) °C for 72 h and measure the thickness, T_2, using the test method according to 5.2. Calculate the percentage thickness change using Formula (5):

$$\Delta T_2 = \frac{T_2 - T_0}{T_0} \times 100\% \tag{5}$$

© ISO 2018 – All rights reserved

Licensed to Liverpool, University of Liverpool, University of Liverpool as of 10/12/2018

5.9 Thickness change

5.9.1 Swelling or shrinkage after exposure to a test liquid

Cut a 50 mm diameter or 50 mm square sample from a blanket. Measure the initial thickness, T_0, of the blanket using the test method according to 5.2. Clamp the sample into a test fixture which protects the edge and non-printing surface from contact with the test liquid (see Figure 5). The test liquid shall be at least 3 mm deep. Expose the printing surface to the test liquid for a period t at a temperature, ϑ (5.9.3 for inks and 5.9.4 for washes). Remove the sample from the test fixture, clean off excess liquid and measure the thickness, T_1, using the method as specified in 5.2. Calculate the percentage thickness change using Formula (4):

$$\Delta T_1 = \frac{T_1 - T_0}{T_0} \times 100\% \tag{4}$$

where

ΔT_1 is the percentage change after time, t;
T_1 is the thickness after time, t;
T_0 is the initial thickness.

The absolute thickness change may also be expressed in millimetres.

Dimensions in millimetres

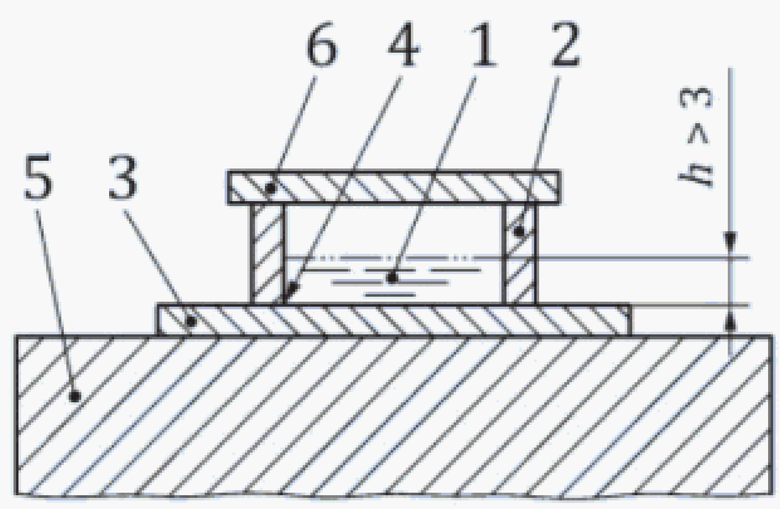

Key

1 test liquid
2 upper test fixture
3 blanket sample
4 sealing point
5 lower test fixture
6 cover

Figure 5 — Test liquid exposure fixture (not to scale)

5.9.2 Swelling or shrinkage after recovery from exposure to a test liquid

Let the sample remain at a temperature of (23 ± 2) °C for 72 h and measure the thickness, T_2, using the test method according to 5.2. Calculate the percentage thickness change using Formula (5):

$$\Delta T_2 = \frac{T_2 - T_0}{T_0} \times 100\% \tag{5}$$

© ISO 2018 – All rights reserved

Licensed to Liverpool, University of Liverpool, University of Liverpool as of 10/12/2018

5.9 Thickness change

5.9.1 Swelling or shrinkage after exposure to a test liquid

Cut a 50 mm diameter or 50 mm square sample from a blanket. Measure the initial thickness, T_0, of the blanket using the test method according to 5.2. Clamp the sample into a test fixture which protects the edge and non-printing surface from contact with the test liquid (see Figure 5). The test liquid shall be at least 3 mm deep. Expose the printing surface to the test liquid for a period t at a temperature, ϑ (5.9.3 for inks and 5.9.4 for washes). Remove the sample from the test fixture, clean off excess liquid and measure the thickness, T_1, using the method as specified in 5.2. Calculate the percentage thickness change using Formula (4):

$$\Delta T_1 = \frac{T_1 - T_0}{T_0} \times 100\% \tag{4}$$

where

ΔT_1 is the percentage change after time, t;
T_1 is the thickness after time, t;
T_0 is the initial thickness.

The absolute thickness change may also be expressed in millimetres.

Dimensions in millimetres

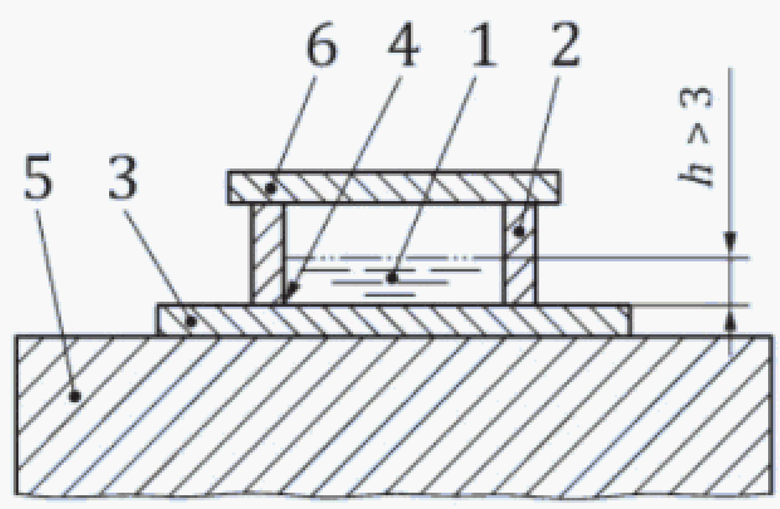

Key

1 test liquid
2 upper test fixture
3 blanket sample
4 sealing point
5 lower test fixture
6 cover

Figure 5 — Test liquid exposure fixture (not to scale)

5.9.2 Swelling or shrinkage after recovery from exposure to a test liquid

Let the sample remain at a temperature of (23 ± 2) °C for 72 h and measure the thickness, T_2, using the test method according to 5.2. Calculate the percentage thickness change using Formula (5):

$$\Delta T_2 = \frac{T_2 - T_0}{T_0} \times 100\% \tag{5}$$

© ISO 2018 – All rights reserved

Licensed to Liverpool, University of Liverpool, University of Liverpool as of 10/12/2018

5.9 Thickness change

5.9.1 Swelling or shrinkage after exposure to a test liquid

Cut a 50 mm diameter or 50 mm square sample from a blanket. Measure the initial thickness, T_0, of the blanket using the test method according to 5.2. Clamp the sample into a test fixture which protects the edge and non-printing surface from contact with the test liquid (see Figure 5). The test liquid shall be at least 3 mm deep. Expose the printing surface to the test liquid for a period t at a temperature, ϑ (5.9.3 for inks and 5.9.4 for washes). Remove the sample from the test fixture, clean off excess liquid and measure the thickness, T_1, using the method as specified in 5.2. Calculate the percentage thickness change using Formula (4):

$$\Delta T_1 = \frac{T_1 - T_0}{T_0} \times 100\% \tag{4}$$

where

ΔT_1 is the percentage change after time, t;
T_1 is the thickness after time, t;
T_0 is the initial thickness.

The absolute thickness change may also be expressed in millimetres.

Dimensions in millimetres

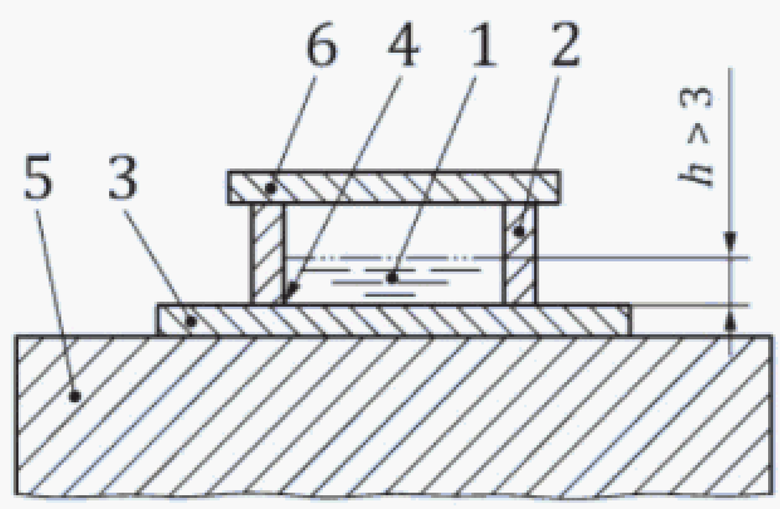

Key

1 test liquid
2 upper test fixture
3 blanket sample
4 sealing point
5 lower test fixture
6 cover

Figure 5 — Test liquid exposure fixture (not to scale)

5.9.2 Swelling or shrinkage after recovery from exposure to a test liquid

Let the sample remain at a temperature of (23 ± 2) °C for 72 h and measure the thickness, T_2, using the test method according to 5.2. Calculate the percentage thickness change using Formula (5):

$$\Delta T_2 = \frac{T_2 - T_0}{T_0} \times 100\% \tag{5}$$

© ISO 2018 – All rights reserved