BS ISO 12853:2015

Microscopes — Information provided to the user

bsi.

...making excellence a habit.™

National foreword

This British Standard is the UK implementation of ISO 12853:2015. It supersedes BS 7012-11:1998 which is withdrawn.

The UK participation in its preparation was entrusted to Technical Committee CPW/172, Optics and Photonics.

A list of organizations represented on this committee can be obtained on request to its secretary.

This publication does not purport to include all the necessary provisions of a contract. Users are responsible for its correct application.

© The British Standards Institution 2015.
Published by BSI Standards Limited 2015

ISBN 978 0 580 85745 4

ICS 37.020

Compliance with a British Standard cannot confer immunity from legal obligations.

This British Standard was published under the authority of the Standards Policy and Strategy Committee on 30 September 2015.

Amendments/corrigenda issued since publication

Date	Text affected

INTERNATIONAL STANDARD

ISO 12853

Second edition
2015-09-15

Microscopes — Information provided to the user

Microscopes — Informations délivrées à l'utilisateur

Reference number
ISO 12853:2015(E)

© ISO 2015

COPYRIGHT PROTECTED DOCUMENT

© ISO 2015, Published in Switzerland

All rights reserved. Unless otherwise specified, no part of this publication may be reproduced or utilized otherwise in any form or by any means, electronic or mechanical, including photocopying, or posting on the internet or an intranet, without prior written permission. Permission can be requested from either ISO at the address below or ISO's member body in the country of the requester.

ISO copyright office
Ch. de Blandonnet 8 • CP 401
CH-1214 Vernier, Geneva,
Switzerland
Tel. +41 22 749 01 11 Fax
+41 22 749 09 47
copyright@iso.org
www.iso.org

Contents

Page

Foreword ..... **iv**

1 Scope **1**

2 Normative references **1**

3 Data provided by the manufacturer **1**

3.1 General information 1

3.1.1 Details of origin 1

3.1.2 (r) Field of application 1

3.1.3 (m) Imaging and illumination methods 1

3.1.4 (r) Accessories 1

3.2 Design information 1

3.2.1 Optical system 1

3.2.2 Stand 2

3.2.3 Microscope tube 2

3.2.4 Nosepiece 3

3.2.5 Objectives 4

3.2.6 Eyepieces 4

3.2.7 Condenser 5

3.2.8 Illuminating system 5

3.2.9 Light source 5

3.2.10 Power supply 5

Bibliography **6**

© ISO 2015 – All rights reserved

Foreword

ISO (the International Organization for Standardization) is a worldwide federation of national standards bodies (ISO member bodies). The work of preparing International Standards is normally carried out through ISO technical committees. Each member body interested in a subject for which a technical committee has been established has the right to be represented on that committee. International organizations, governmental and non-governmental, in liaison with ISO, also take part in the work. ISO collaborates closely with the International Electrotechnical Commission (IEC) on all matters of electrotechnical standardization.

The procedures used to develop this document and those intended for its further maintenance are described in the ISO/IEC Directives, Part 1. In particular the different approval criteria needed for the different types of ISO documents should be noted. This document was drafted in accordance with the editorial rules of the ISO/IEC Directives, Part 2 (see www.iso.org/directives).

Attention is drawn to the possibility that some of the elements of this document may be the subject of patent rights. ISO shall not be held responsible for identifying any or all such patent rights. Details of any patent rights identified during the development of the document will be in the Introduction and/or on the ISO list of patent declarations received (see www.iso.org/patents).

Any trade name used in this document is information given for the convenience of users and does not constitute an endorsement.

For an explanation on the meaning of ISO specific terms and expressions related to conformity assessment, as well as information about ISO's adherence to the WTO principles in the Technical Barriers to Trade (TBT) see the following URL: Foreword - Supplementary information.

The committee responsible for this document is ISO/TC 172, *Optics and photonics*, Subcommittee SC 5, *Microscopes and endoscopes*.

This second edition cancels and replaces the first edition (ISO 12853:1997), which has been technically revised in order to:

— specify the Scope in more detail;

— add further examples to the field of application (see 3.1.2);

— update the design information (e.g. dimension of overall mechanical depth added and new Figure 1);

— add the optical system to the design information (see 3.2.1).

© ISO 2015 – All rights reserved

INTERNATIONAL STANDARD ISO 12853:2015(E)

Microscopes — Information provided to the user

1 Scope

This International Standard specifies the minimum required information to be provided to the user by the microscope manufacturer. This International Standard is not applicable to inverted microscopes, advanced technique microscopes, and digital display microscopes.

2 Normative references

The following documents, in whole or in part, are normatively referenced in this document and are indispensable for its application. For dated references, only the edition cited applies. For undated references, the latest edition of the referenced document (including any amendments) applies.

ISO 8578, *Microscopes — Marking of objectives and eyepieces*

3 Data provided by the manufacturer

3.1 General information

The mandatory data, indicated (m), shall be provided by the manufacturer when the respective microscope assemblies feature the properties described. Provision of further microscope data, indicated (r), is recommended but not required.

3.1.1 Details of origin

3.1.1.1 (m) Manufacturer

3.1.1.2 (r) Country of origin, if required

3.1.2 (r) Field of application

EXAMPLE Schools and courses, laboratories, research, industry.

3.1.3 (m) Imaging and illumination methods

EXAMPLE Transmitted light, reflected light, brightfield, darkfield, phase contrast, differential interference contrast, polarization, fluorescence.

3.1.4 (r) Accessories

EXAMPLE Photographic equipment, alternative light sources, manipulators, photometric equipment, image processing equipment, video equipment.

3.2 Design information

3.2.1 Optical system

3.2.1.1 (m) Type of optical system

EXAMPLE Finite, infinite.

© ISO 2015 – All rights reserved

3.2.2 Stand

3.2.2.1 Dimension of stand, expressed in millimetres (see Figure 1):

a) (m) l_1, l_2 base dimensions (measured in *x* and *y* directions);

b) (m) l_3 overall mechanical height (without attachments);

c) (m) l_5 distance from exit pupil to base plane (65 mm interpupillary distance);

d) (m) l_7 distance from exit pupil to focus drive (65 mm interpupillary distance);

e) (r) l_4 maximum height of stage surface from base plane;

f) (r) l_6 distance from focus drive to base plane;

g) (r) l_8 distance between the exit pupil and the objective's optical axis;

h) (r) l_9 overall mechanical depth;

i) (r) l_{10} depth of lamp-house.

3.2.2.2 (r) Mass of the stand, expressed in kilograms (including body tube, but without attachments).

3.2.2.3 (r) Interchangeability of components at the stand.

EXAMPLE Viewing tube, stage, substage, lamp housing, nosepiece.

3.2.2.4 Adjustment integrated in the stand:

a) (m) coarse adjustment affecting the stage or the body tube;

b) (m) operating range of coarse adjustment range, in millimetres;

c) (m) fine adjustment affecting the stage or the body tube;

d) (r) operating range of fine adjustment, in millimetres;

e) (r) movement of fine adjustment per scale division or rotation, in micrometres;

f) (r) movement of coarse adjustment per rotation, in millimetres.

3.2.2.5 (r) Slots integrated in the stand.

3.2.2.6 (m) Tube factor *q* different from 1 × (if tube lens is located in the stand).

3.2.3 Microscope tube

a) (m) Monocular, binocular, or trinocular tube;

b) (m) interpupillary distance adjustment range, in millimetres;

c) (m) tube factor *q* different from 1 × (if the tube lens is located in the tube);

d) (m) inclination angle α of a viewing direction (see Figure 1);

e) (m) inside diameter of the eyepiece tube(s) (23,2 mm or 30 mm);

f) (r) dioptre adjustment;

© ISO 2015 – All rights reserved

g) (r) tube length compensation;

h) (r) focal length of the tube lens (if the tube lens is corrected for infinite primary image distance);

i) (r) splitting ratio(s) of the beam splitter(s);

j) (r) distance l_8 between the exit pupil and the objective's optical axis (see Figure 1).

Dimensions in millimetres

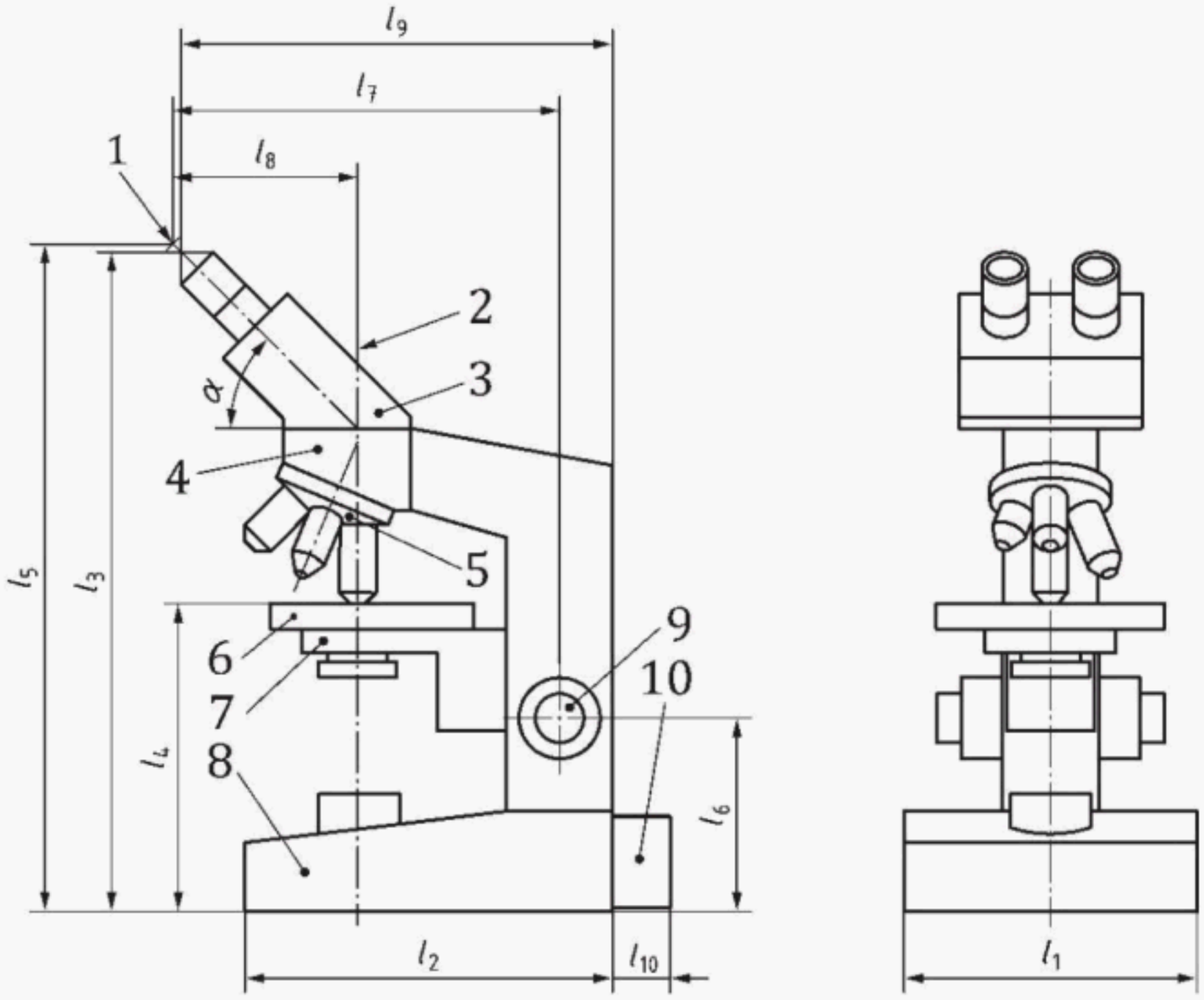

Key

1 exit pupil
2 optical axis
3 viewing tube
4 body tube
5 nosepiece
6 stage
7 substage
8 base of stand
9 focus drive
10 lamp house

Figure 1 — Dimensions of the stand

3.2.4 Nosepiece

a) (m) Number of mounting holes for objectives;

b) (m) objective centration;

c) (r) dimensions of screw thread other than the RMS thread.

© ISO 2015 – All rights reserved

3.2.5 Objectives

The following data of the objectives, suitable for use with related microscope, shall be listed in accordance with ISO 8578:

a) (m) magnification;

b) (m) numerical aperture;

c) (m) state of correction, field of view, and colour;

d) (m) immersion medium (other than air);

e) (m) tube length, in millimetres;

f) (m) cover glass thickness, in millimetres;

g) (m) contrast methods;

h) (m) suitability for polarized-light microscopy;

i) (m) iris diaphragm;

j) (m) free working distance, in millimetres;

k) (m) correction collar.

3.2.6 Eyepieces

The following data of the objectives, suitable for use with related microscope, shall be listed in accordance with ISO 8578:

a) (m) magnification;

b) (m) field number;

c) (m) diameter of eyepiece (23,2 mm or 30 mm);

d) (r) type of correction;

e) (r) interchangeability of graticules;

f) (r) suitability for spectacle wearers;

g) (r) dioptre adjustment.

© ISO 2015 – All rights reserved

3.2.7 Condenser

a) (m) Maximum numerical aperture;

b) (m) suitability for contrast methods;

c) (r) type of correction;

d) (r) range of objectives at a given field of view;

e) (r) free working distance, in millimetres;

f) (r) illuminating aperture diaphragm;

g) (r) filter holder;

h) (r) interchangeability;

i) (r) slide thickness, in millimetres.

3.2.8 Illuminating system

3.2.8.1 (r) Substage.

EXAMPLE Interchangeability, centring possibility for the condenser, filter holder, polarizing device, illuminated field diaphragm for transmitted light.

3.2.8.2 (r) Vertical illuminator for incident light.

EXAMPLE Illuminating aperture diaphragm, illuminated field diaphragm, slots for accessories, polarizing device, centring possibility of diaphragms.

3.2.9 Light source

a) (m) Arrangement of the light source (incorporated in the stand or lamp housing attached to the stand);

b) (m) type of light source (halogen, LED, mercury arc, xenon arc, etc.);

c) (m) model number;

d) (m) voltage and wattage of light source;

e) (m) type of current (a.c. or d.c.);

f) (r) colour temperature of the light source at rated voltage;

g) (r) rated lifetime of the light source.

3.2.10 Power supply

a) (m) Main supply voltage (V a.c.);

b) (m) main supply frequency (50 Hz and/or 60 Hz);

c) (m) power consumption (VA);

d) (m) fuse (type rated amperage);

e) (m) built-in or external;

f) (m) output adjustable or fixed.

© ISO 2015 – All rights reserved

Bibliography

[1] ISO 10934-1, *Optics and optical instruments — Vocabulary for microscopy — Part 1: Light microscopy*

© ISO 2015 – All rights reserved

ICS 37.020

Price based on 6 pages

© ISO 2015 – All rights reserved

This page deliberately left blank

NO COPYING WITHOUT BSI PERMISSION EXCEPT AS PERMITTED BY COPYRIGHT LAW

British Standards Institution (BSI)

BSI is the national body responsible for preparing British Standards and other standards-related publications, information and services.

BSI is incorporated by Royal Charter. British Standards and other standardization products are published by BSI Standards Limited.

About us

We bring together business, industry, government, consumers, innovators and others to shape their combined experience and expertise into standards -based solutions.

The knowledge embodied in our standards has been carefully assembled in a dependable format and refined through our open consultation process. Organizations of all sizes and across all sectors choose standards to help them achieve their goals.

Information on standards

We can provide you with the knowledge that your organization needs to succeed. Find out more about British Standards by visiting our website at bsigroup.com/standards or contacting our Customer Services team or Knowledge Centre.

Buying standards

You can buy and download PDF versions of BSI publications, including British and adopted European and international standards, through our website at bsigroup.com/shop, where hard copies can also be purchased.

If you need international and foreign standards from other Standards Development Organizations, hard copies can be ordered from our Customer Services team.

Subscriptions

Our range of subscription services are designed to make using standards easier for you. For further information on our subscription products go to bsigroup.com/subscriptions.

With British Standards Online (BSOL) you'll have instant access to over 55,000 British and adopted European and international standards from your desktop. It's available 24/7 and is refreshed daily so you'll always be up to date.

You can keep in touch with standards developments and receive substantial discounts on the purchase price of standards, both in single copy and subscription format, by becoming a BSI Subscribing Member.

PLUS is an updating service exclusive to BSI Subscribing Members. You will automatically receive the latest hard copy of your standards when they're revised or replaced.

To find out more about becoming a BSI Subscribing Member and the benefits of membership, please visit bsigroup.com/shop.

With a Multi-User Network Licence (MUNL) you are able to host standards publications on your intranet. Licences can cover as few or as many users as you wish. With updates supplied as soon as they're available, you can be sure your documentation is current. For further information, email bsmusales@bsigroup.com.

Revisions

Our British Standards and other publications are updated by amendment or revision.

We continually improve the quality of our products and services to benefit your business. If you find an inaccuracy or ambiguity within a British Standard or other BSI publication please inform the Knowledge Centre.

Copyright

All the data, software and documentation set out in all British Standards and other BSI publications are the property of and copyrighted by BSI, or some person
or entity that owns copyright in the information used (such as the international standardization bodies) and has formally licensed such information to BSI for commercial publication and use. Except as permitted under the Copyright, Designs
and Patents Act 1988 no extract may be reproduced, stored in a retrieval system or transmitted in any form or by any means – electronic, photocopying, recording or otherwise – without prior written permission from BSI. Details and advice can be obtained from the Copyright & Licensing Department.

Useful Contacts:

Customer Services
Tel: +44 845 086 9001
Email (orders): orders@bsigroup.com
Email (enquiries): cservices@bsigroup.com

Subscriptions
Tel: +44 845 086 9001
Email: subscriptions@bsigroup.com

Knowledge Centre
Tel: +44 20 8996 7004
Email: knowledgecentre@bsigroup.com

Copyright & Licensing
Tel: +44 20 8996 7070
Email: copyright@bsigroup.com

BSI Group Headquarters

389 Chiswick High Road London W4 4AL UK

bsi.

...making excellence a habit.™