BS ISO 15643:2020

BSI Standards Publication

Road construction and maintenance equipment — Bituminous binder sprayers and synchronous bituminous binder sprayers-chip spreaders — Terminology and commercial specifications

bsi.

National foreword

This British Standard is the UK implementation of ISO 15643:2020. It supersedes BS ISO 15643:2002+A1:2012, which is withdrawn.

The UK participation in its preparation was entrusted to Technical Committee B/513, Construction equipment and plant and site safety.

A list of organizations represented on this committee can be obtained on request to its committee manager.

This publication does not purport to include all the necessary provisions of a contract. Users are responsible for its correct application.

© The British Standards Institution 2020
Published by BSI Standards Limited 2020

ISBN 978 0 539 01475 4

ICS 93.080.10

Compliance with a British Standard cannot confer immunity from legal obligations.

This British Standard was published under the authority of the Standards Policy and Strategy Committee on 30 November 2020.

Amendments/corrigenda issued since publication

Date	Text affected

INTERNATIONAL STANDARD

ISO 15643

Second edition
2020-10-30

Road construction and maintenance equipment — Bituminous binder sprayers and synchronous bituminous binder sprayers-chip spreaders — Terminology and commercial specifications

Équipements pour la construction et l'entretien des routes — Répandeuses de liants bitumineux et répandeuses-gravillonneurs synchrones — Terminologie et spécifications commerciales

Reference number
ISO 15643:2020(E)

© ISO 2020

COPYRIGHT PROTECTED DOCUMENT

© ISO 2020, Published in Switzerland

All rights reserved. Unless otherwise specified, no part of this publication may be reproduced or utilized otherwise in any form or by any means, electronic or mechanical, including photocopying, or posting on the internet or an intranet, without prior written permission. Permission can be requested from either ISO at the address below or ISO's member body in the country of the requester.

ISO copyright office
Ch. de Blandonnet 8 • CP 401
CH-1214 Vernier, Geneva, Switzerland
Tel. +41 22 749 01 11
Fax +41 22 749 09 47
copyright@iso.org
www.iso.org

Contents

Page

Foreword ..... **iv**

1 Scope **1**

2 Normative references **1**

3 Terms and definitions **1**

4 Description of sprayer components **3**
4.1 Transport vehicle 3
4.2 Tank 3
4.3 Binder transfer device 3
4.4 Spray bar 3
4.5 Control station 3

5 Commercial specifications of bituminous binder sprayers and spraying part of synchronised combined unit **4**
5.1 General 4
5.2 Binder sprayer components list 4
5.3 Vehicle characteristics 6
5.4 Tank: performance and characteristics 7
5.4.1 General characteristics 7
5.4.2 Binder tank performance 7
5.5 Burner 9
5.6 Binder transfer unit: bitumen pumping and transmission characteristics 10
5.7 Spray bar: performance and characteristics 11
5.8 Control station performance 15
5.8.1 Positioning, control and adjustment equipment 15
5.8.2 Automatic measuring and control equipment 15

6 Commercial specifications of spreading part of synchronised combined units **15**
6.1 Components list of spreading part of combined units 15
6.2 Control station performance 16
6.2.1 Positioning, control and adjustment equipment 16
6.2.2 Automatic measuring and control equipment 17
6.3 Chip hopper: performance and characteristics 17
6.4 Chip spreader: performance and characteristics 18

Bibliography **21**

© ISO 2020 – All rights reserved

Foreword

ISO (the International Organization for Standardization) is a worldwide federation of national standards bodies (ISO member bodies). The work of preparing International Standards is normally carried out through ISO technical committees. Each member body interested in a subject for which a technical committee has been established has the right to be represented on that committee. International organizations, governmental and non-governmental, in liaison with ISO, also take part in the work. ISO collaborates closely with the International Electrotechnical Commission (IEC) on all matters of electrotechnical standardization.

The procedures used to develop this document and those intended for its further maintenance are described in the ISO/IEC Directives, Part 1. In particular, the different approval criteria needed for the different types of ISO documents should be noted. This document was drafted in accordance with the editorial rules of the ISO/IEC Directives, Part 2 (see www.iso.org/directives).

Attention is drawn to the possibility that some of the elements of this document may be the subject of patent rights. ISO shall not be held responsible for identifying any or all such patent rights. Details of any patent rights identified during the development of the document will be in the Introduction and/or on the ISO list of patent declarations received (see www.iso.org/patents).

Any trade name used in this document is information given for the convenience of users and does not constitute an endorsement.

For an explanation of the voluntary nature of standards, the meaning of ISO specific terms and expressions related to conformity assessment, as well as information about ISO's adherence to the World Trade Organization (WTO) principles in the Technical Barriers to Trade (TBT), see www.iso.org/iso/foreword.html.

This document was prepared by Technical Committee ISO/TC 195, *Building construction machinery and equipment*.

This second edition cancels and replaces the first edition (ISO 15643:2002), which have been technically revised. It also incorporates the Amendment ISO 15643:2002/Amd 1:2012.

The main changes compared to the previous edition are as follows:

— adjusted the use of the terms "spread" and "spray" throughout the document;

— added Figure 1 c) — Trailed binder sprayer;

— added chip spreaders;

— corrected the references for most of the figures.

Any feedback or questions on this document should be directed to the user's national standards body. A complete listing of these bodies can be found at www.iso.org/members.html.

© ISO 2020 – All rights reserved

INTERNATIONAL STANDARD ISO 15643:2020

Road construction and maintenance equipment — Bituminous binder sprayers and synchronous bituminous binder sprayers-chip spreaders — Terminology and commercial specifications

1 Scope

This document establishes the terminology and the content of commercial literature specifications for bituminous binder sprayers and synchronous bituminous binder sprayers-chip spreaders (i.e. synchronised combined units) including their components and their technical characteristics.

This document covers cold and hot bituminous binder sprayers.

2 Normative references

The following documents are referred to in the text in such a way that some or all of their content constitutes requirements of this document. For dated references, only the edition cited applies. For undated references, the latest edition of the referenced document (including any amendments) applies.

ISO 15644, *Road construction and maintenance equipment — Chippings spreaders — Terminology and commercial specifications*

3 Terms and definitions

For the purposes of this document, the terms and definitions given in ISO 15644 and the following apply.

ISO and IEC maintain terminological databases for use in standardization at the following addresses:

— ISO Online browsing platform: available at https://www.iso.org/obp

— IEC Electropedia: available at http://www.electropedia.org/

3.1
bituminous binder sprayer
machine used to apply a film of bituminous binder on a pavement at a predetermined application rate

Note 1 to entry: The particular sprayer types may be defined by associating the operating principle, the shape of the components, the type of binder, and by specifying the spraying performances.

3.2
synchronised combined unit
synchronous bituminous binder sprayer-chip spreader
machine which consists of a combination of *bituminous binder sprayer* (3.1) and chip spreader, used to make synchronised application of bituminous binder and chips on a pavement at predetermined application rate for a complete road surface treatment

3.3
displacement pump sprayer
bituminous binder sprayer (3.1) in which bituminous binder transfer from the storage tank to the spray bar is provided by a pump

Note 1 to entry: The pump's output is proportional to its rotating speed which may be controlled by the vehicle movement speed.

© ISO 2020 – All rights reserved

3.14
nominal application rate
application rate at *maximum output of a pumping unit* (3.13) moving at a speed of 4 km/h with a binder of a density of 1 g/cm^3 and a viscosity of 100 mm^2/s and with maximum *spray bar width* (3.12)

Note 1 to entry: It is expressed in kilograms per square metre.

3.15
binder carrying capacity
difference between the laden and kerb mass of a sprayer or *synchronised combined unit* (3.2)

3.16
spraying height
height measured between the average plane of the pavement and the orifice of the nozzles

Note 1 to entry: It is expressed in millimetres.

Note 2 to entry: See h_2 in Figure 8.

4 Description of sprayer components

4.1 Transport vehicle

The vehicle, in the form of a truck, trailer or semi-trailer, carries all the components and provides movement of the sprayer during spraying and during road transfers.

4.2 Tank

The tank is used to store the binder during work and transport.

It may have a facility to heat the binder and may have a system to prevent loss of heat, e.g. a heat-insulated sprayer.

4.3 Binder transfer device

The binder transfer device provides transfer of the binder from the tank to the spray bar in order to apply a specific quantity to the pavement.

4.4 Spray bar

The spray bar distributes the binder uniformly across the pavement.

4.5 Control station

The control station contains all the control, adjustment, measuring and automatic control equipment. There are two types, as follows.

a) Manual control: the operator adjusts all the operating parameters to obtain the required application rate.

b) Automatic control: using predetermined operating parameters, automation ensures accuracy of the application rate.

© ISO 2020 – All rights reserved

3.14
nominal application rate
application rate at *maximum output of a pumping unit* (3.13) moving at a speed of 4 km/h with a binder of a density of 1 g/cm^3 and a viscosity of 100 mm^2/s and with maximum *spray bar width* (3.12)

Note 1 to entry: It is expressed in kilograms per square metre.

3.15
binder carrying capacity
difference between the laden and kerb mass of a sprayer or *synchronised combined unit* (3.2)

3.16
spraying height
height measured between the average plane of the pavement and the orifice of the nozzles

Note 1 to entry: It is expressed in millimetres.

Note 2 to entry: See h_2 in Figure 8.

4 Description of sprayer components

4.1 Transport vehicle

The vehicle, in the form of a truck, trailer or semi-trailer, carries all the components and provides movement of the sprayer during spraying and during road transfers.

4.2 Tank

The tank is used to store the binder during work and transport.

It may have a facility to heat the binder and may have a system to prevent loss of heat, e.g. a heat-insulated sprayer.

4.3 Binder transfer device

The binder transfer device provides transfer of the binder from the tank to the spray bar in order to apply a specific quantity to the pavement.

4.4 Spray bar

The spray bar distributes the binder uniformly across the pavement.

4.5 Control station

The control station contains all the control, adjustment, measuring and automatic control equipment. There are two types, as follows.

a) Manual control: the operator adjusts all the operating parameters to obtain the required application rate.

b) Automatic control: using predetermined operating parameters, automation ensures accuracy of the application rate.

© ISO 2020 – All rights reserved

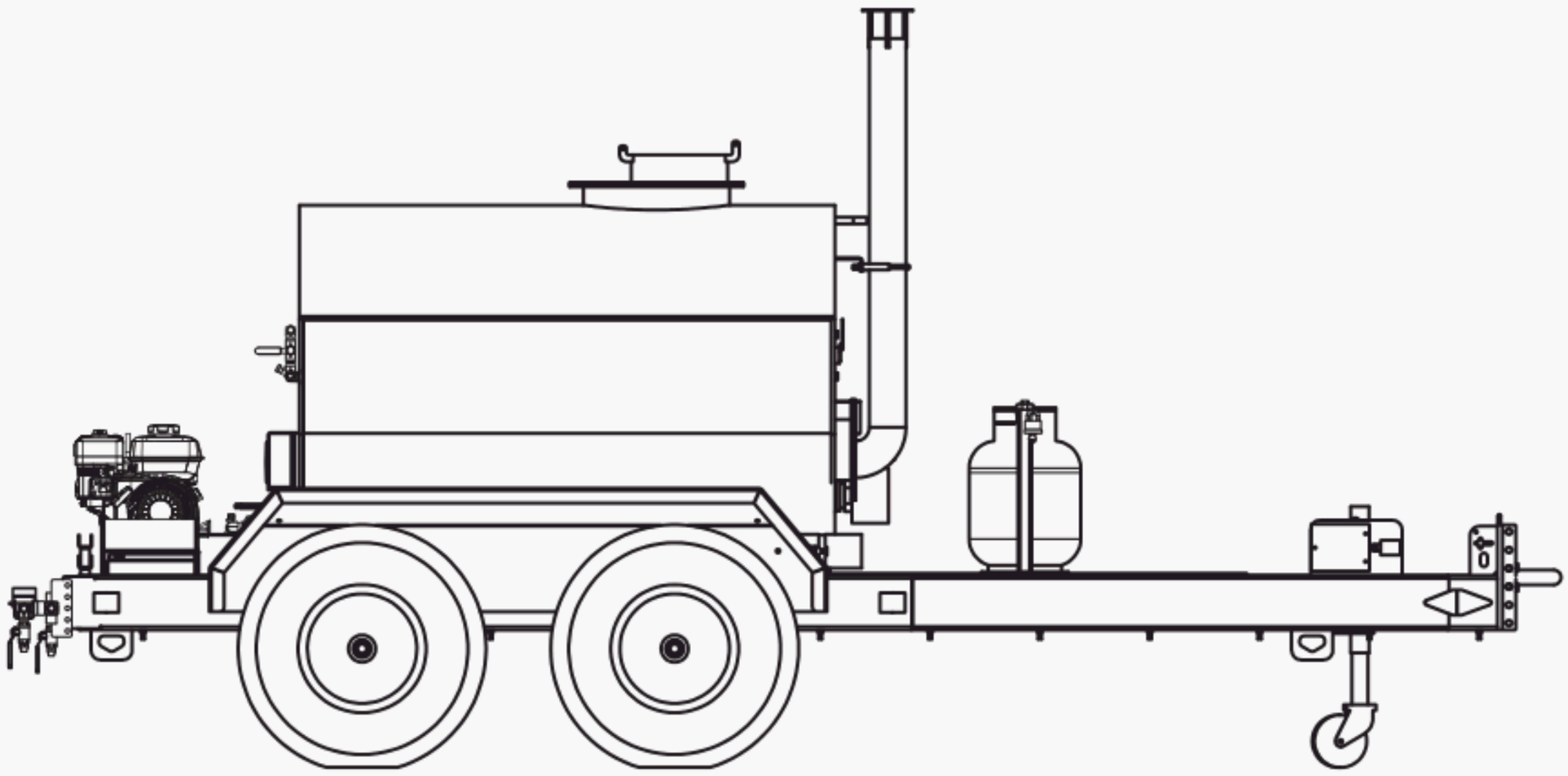

c) Trailed bituminous binder sprayer

Key

1 vehicle
2 tank
3 binder transfer unit
4 spray bar
l_1 front overhang
l_3 rear overhang
h_1 height
5 measuring instruments placed in driver's cab or on the rear part of the vehicle platform
6 measuring instruments placed in driver's cab or on the rear part of the vehicle platform
l_2 wheel base
l_4 length

Figure 1 — Bituminous binder sprayer

© ISO 2020 – All rights reserved

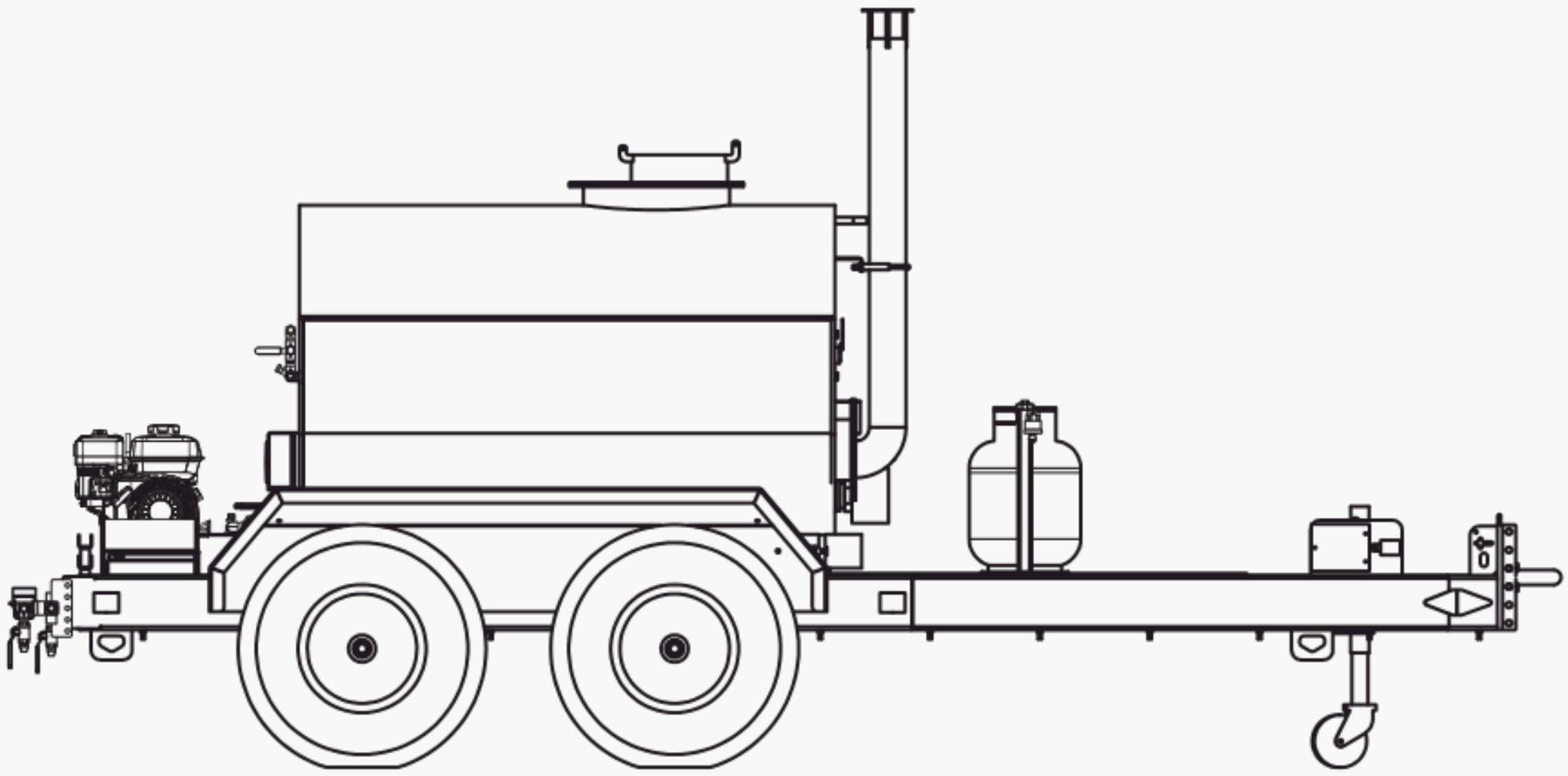

c) Trailed bituminous binder sprayer

Key

1 vehicle
2 tank
3 binder transfer unit
4 spray bar
l_1 front overhang
l_3 rear overhang
h_1 height
5 measuring instruments placed in driver's cab or on the rear part of the vehicle platform
6 measuring instruments placed in driver's cab or on the rear part of the vehicle platform
l_2 wheel base
l_4 length

Figure 1 — Bituminous binder sprayer

© ISO 2020 – All rights reserved

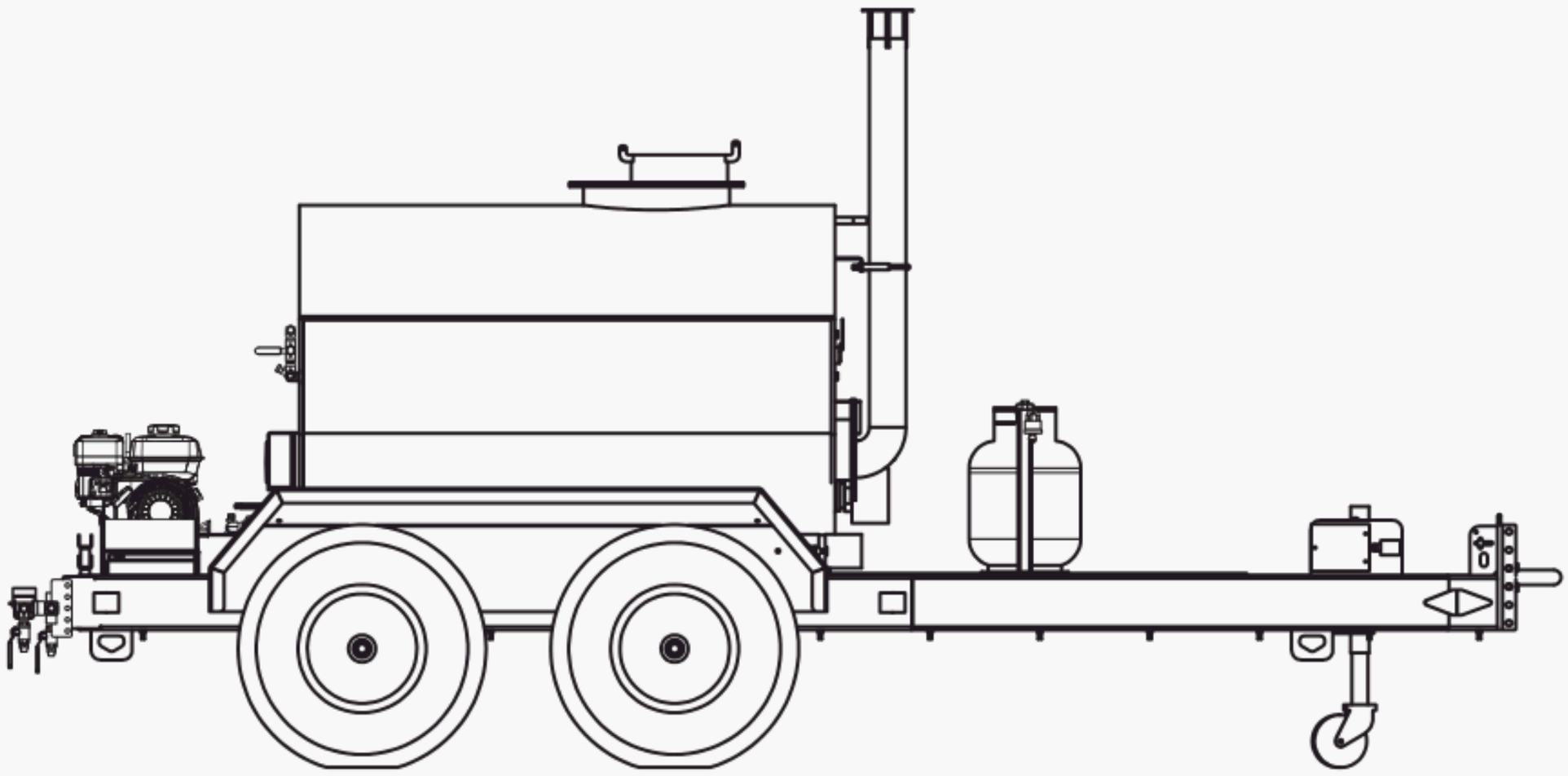

c) Trailed bituminous binder sprayer

Key

1 vehicle
2 tank
3 binder transfer unit
4 spray bar
l_1 front overhang
l_3 rear overhang
h_1 height
5 measuring instruments placed in driver's cab or on the rear part of the vehicle platform
6 measuring instruments placed in driver's cab or on the rear part of the vehicle platform
l_2 wheel base
l_4 length

Figure 1 — Bituminous binder sprayer

© ISO 2020 – All rights reserved

- access ladder to inspection hole (see key 11 in Figure 3);
- guard rail (see key 12 in Figure 3);

— heating device (see key 13 in Figure 3):

- direct heating:
  - by open flame (see key 1 in Figure 4);
  - by electricity (see key 2 in Figure 4);
- indirect heating by thermal oil (see key 3 in Figure 4).

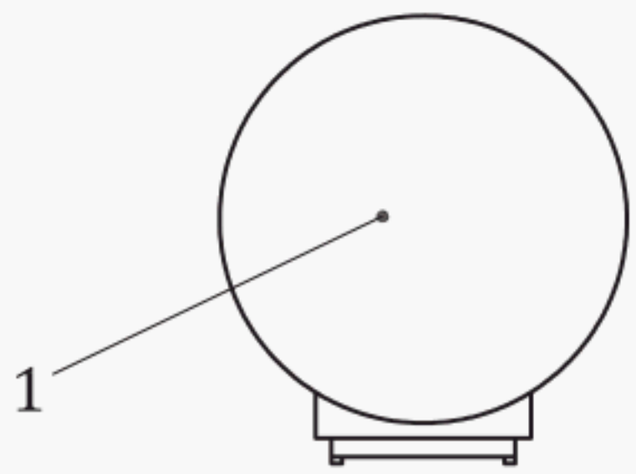

a) Rear view of a circular tank

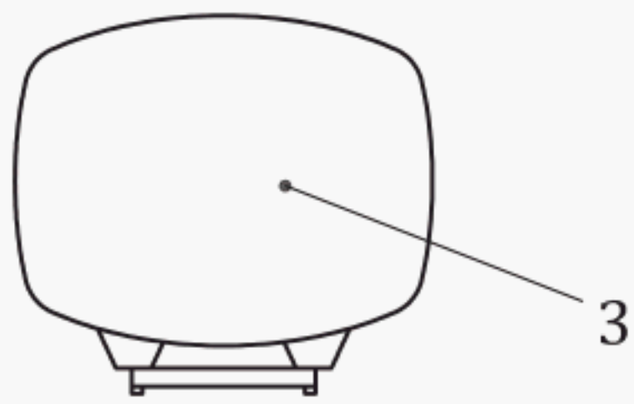

b) Rear view of prismatic with rounded corners tank

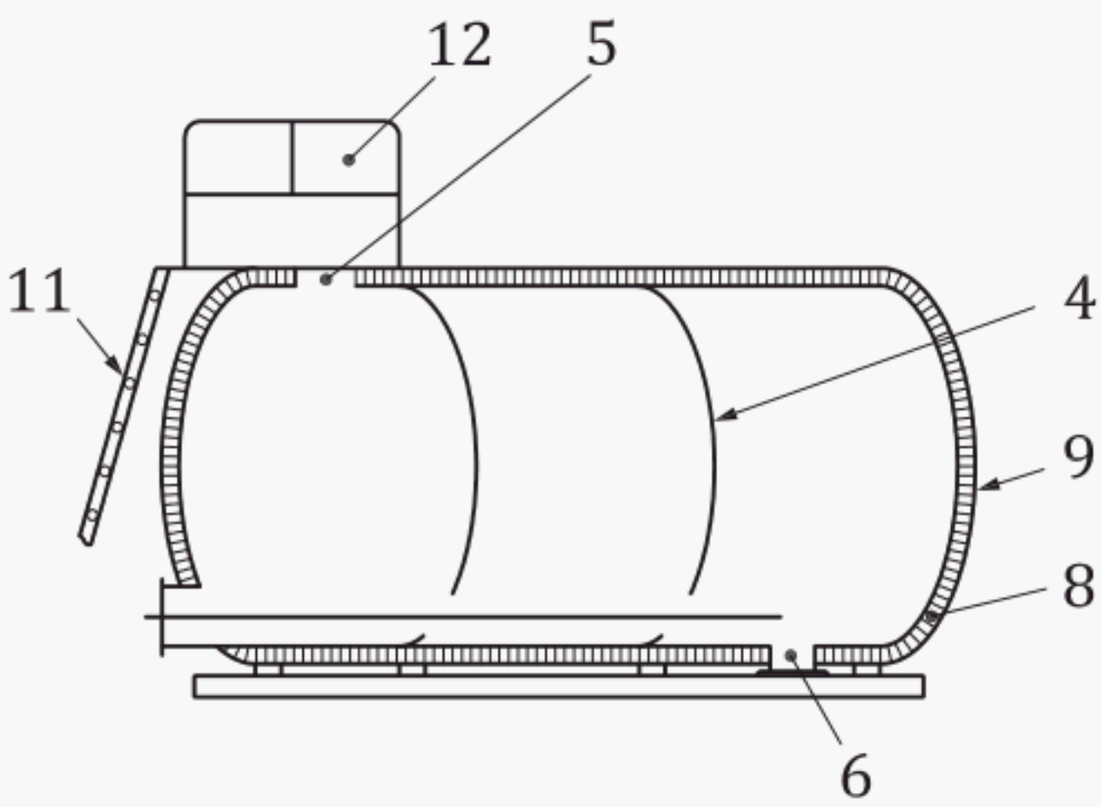

c) Side view of an elliptical tank

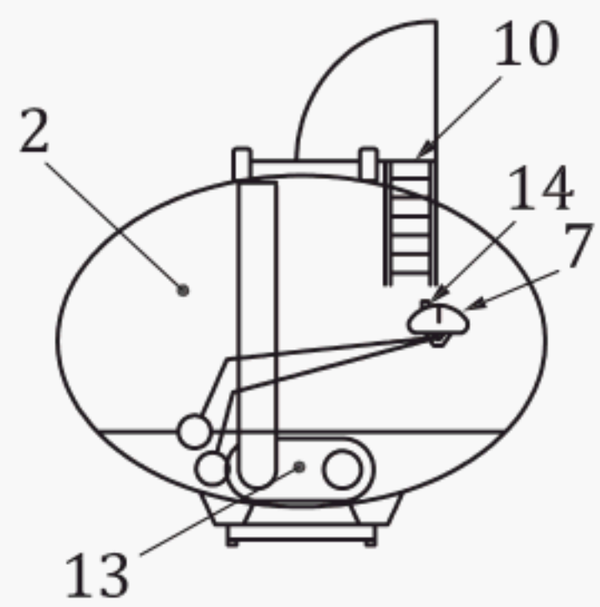

d) Rear view of an elliptical tank

Key

1 circular tank
2 elliptical tank
3 prismatic tank with round corners
4 wash plate partition
5 inspection hole
6 cleaning orifice
7 level indicator
8 thickness of thermal insulation
9 thermal insulation
10 access platform
11 ladder for access to inspection hole
12 guard rail
13 heating device
14 detector for minimum/maximum level of binder

Figure 3 — Bituminous binder tank performance

© ISO 2020 – All rights reserved

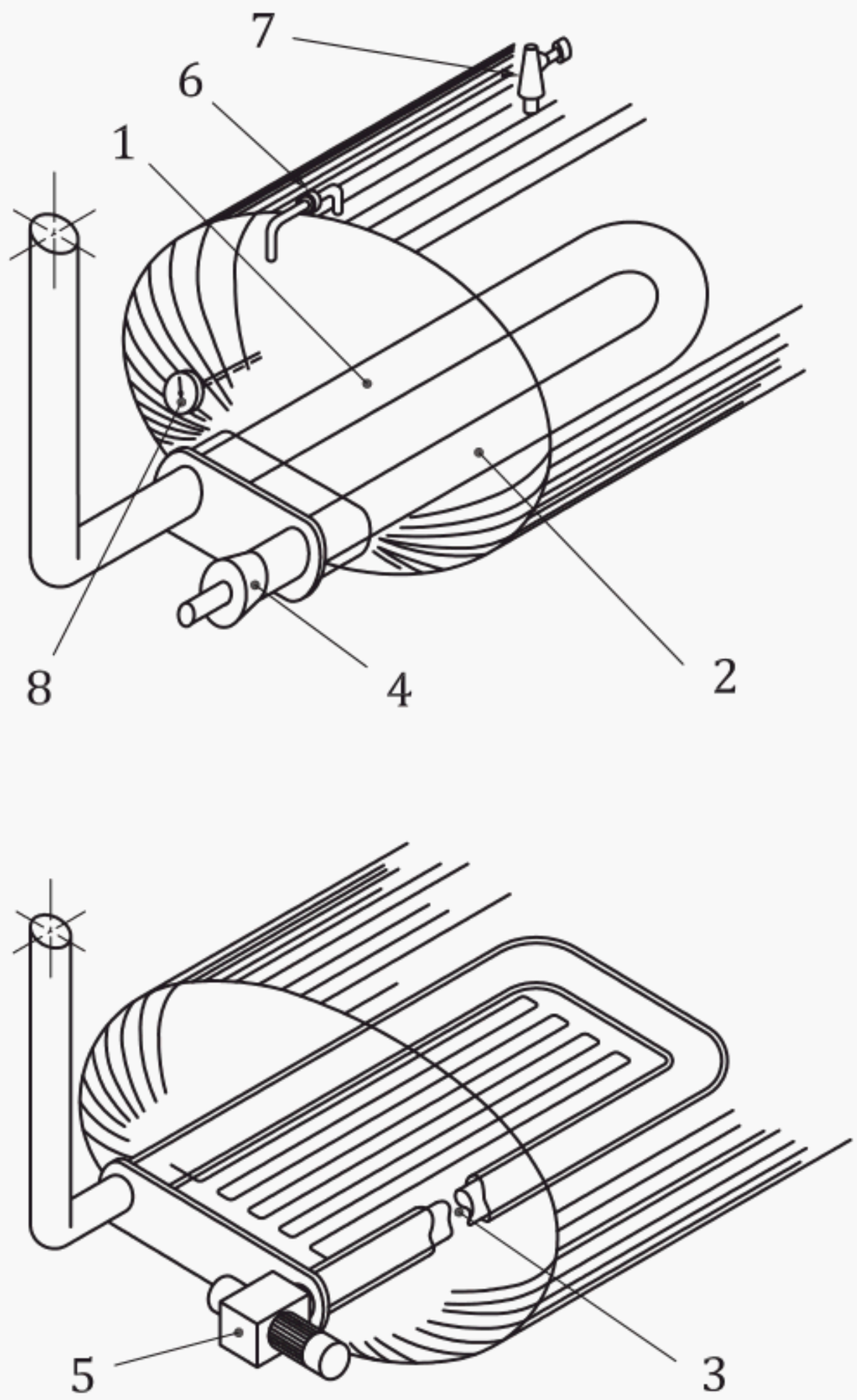

Key

1	direct heating by open flame	5	heating with automatic burner
2	direct electric heating	6	venting device
3	indirect heating installation by thermal oil	7	pressure and vacuum relief valve
4	heating with manual burner	8	thermostat

Figure 4 — Heating installation for directly or indirectly heated sprayer

5.5 Burner

The following characteristics shall be specified:

— manual burner control (see key 4 in Figure 4);

— automatic burner control (see key 5 in Figure 4);

— detector for minimum binder level (see key 14 in Figure 3);

— detector for maximum binder level (see key 14 in Figure 3);

— venting device (see key 6 in Figure 4);

— pressure and vacuum relief valve (see key 7 in Figure 4);

© ISO 2020 – All rights reserved

— thermometer;

— thermostat (see key 8 in Figure 4).

5.6 Binder transfer unit: bitumen pumping and transmission characteristics

The following characteristics shall be specified:

— displacement pump (see key 1 in Figure 5):

  — rotation speed, min^{-1},

  — output, dm^3/min;

— pump heating;

— filter (see key 2 in Figure 5);

— transmission:

  — mechanical (see key 3 in Figure 5);

  — hydrostatic (alternatively);

— power take-off on engine (see key 4 in Figure 5);

— power take-off on gearbox (see key 5 in Figure 5);

— auxiliary engine (see key 2 in Figure 6);

— compressor (see key 3 in Figure 6).

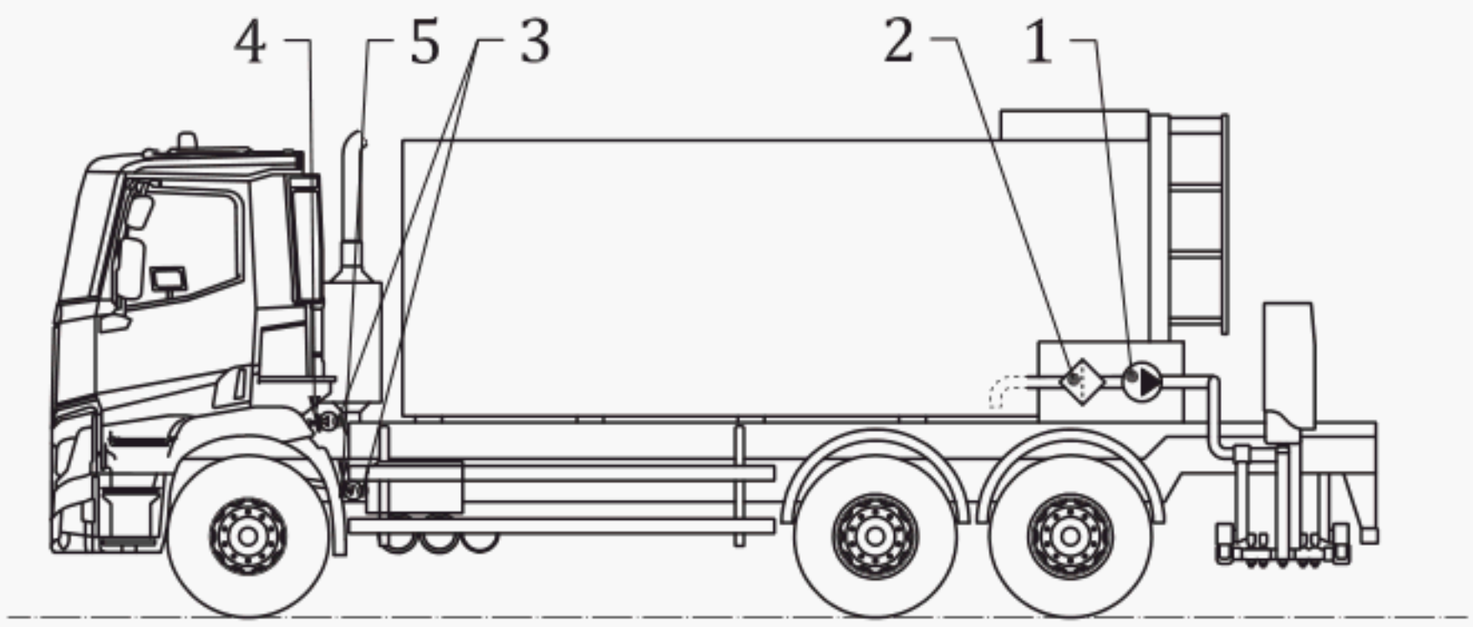

Key

1 bitumen displacement pump
2 bitumen filter
3 bitumen pump drive
4 power take-off on engine
5 power take-off on gearbox

Figure 5 — Displacement pump sprayer

© ISO 2020 – All rights reserved

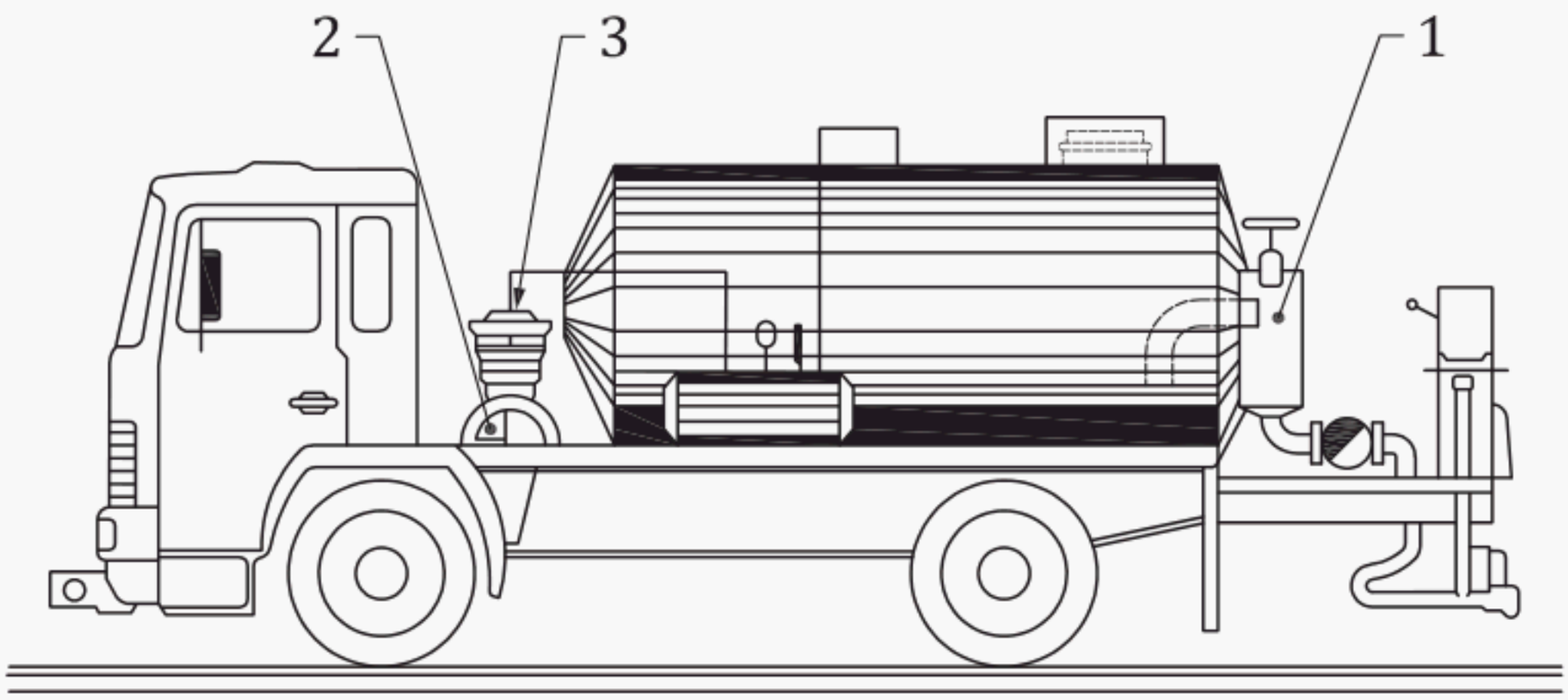

Key

1 bitumen filter

2 auxiliary engine for driving compressor

3 air compressor

Figure 6 — Constant pressure sprayer with air compressor for bitumen feeding

5.7 Spray bar: performance and characteristics

The following characteristics shall be specified:

— design type of spray bar set-up (see Figure 7);

— bar raising method:

  — mechanical;

  — pneumatic;

  — hydraulic;

— spraying height (see Figure 8), h_2, mm;

— height of spray bar in transport, mm;

— minimum width of bar in transport position, b_1, mm;

— maximum width of bar in working position, b_2, mm;

— bar width (see Figure 8), b_3, mm;

— automatic correction of spray bar height during spraying, or without correction;

— pressure in the bar during operation, MPa;

— bar heated by:

  — circulation of binder;

  — thermal oil;

  — electric resistor;

— spraying width:

  — full portion width (see Figure 8), b_4, mm;

© ISO 2020 – All rights reserved

  - medium width (see Figure 8), b_5, mm;
  - covered width (see Figure 8), b_6, mm;
- nozzles (see key 1 in Figure 8):
  - number of nozzles;
  - nozzles control (see key 2 in Figure 8);
  - type of diffuser (individual or collective for two nozzles or more):
    - mechanical;
    - pneumatic;
    - hydraulic;
  - spacing of nozzles (Figure 8), b_7, mm;
  - binder jet shape: coniform or flat (see key 3 in Figure 8);
  - end flow correcting nozzle (see key 4 in Figure 8);
  - position of nozzles:
    - embedded in the spray bar;
    - outside the spray bar;
  - orientation of nozzles (Figure 8), α°.

© ISO 2020 – All rights reserved

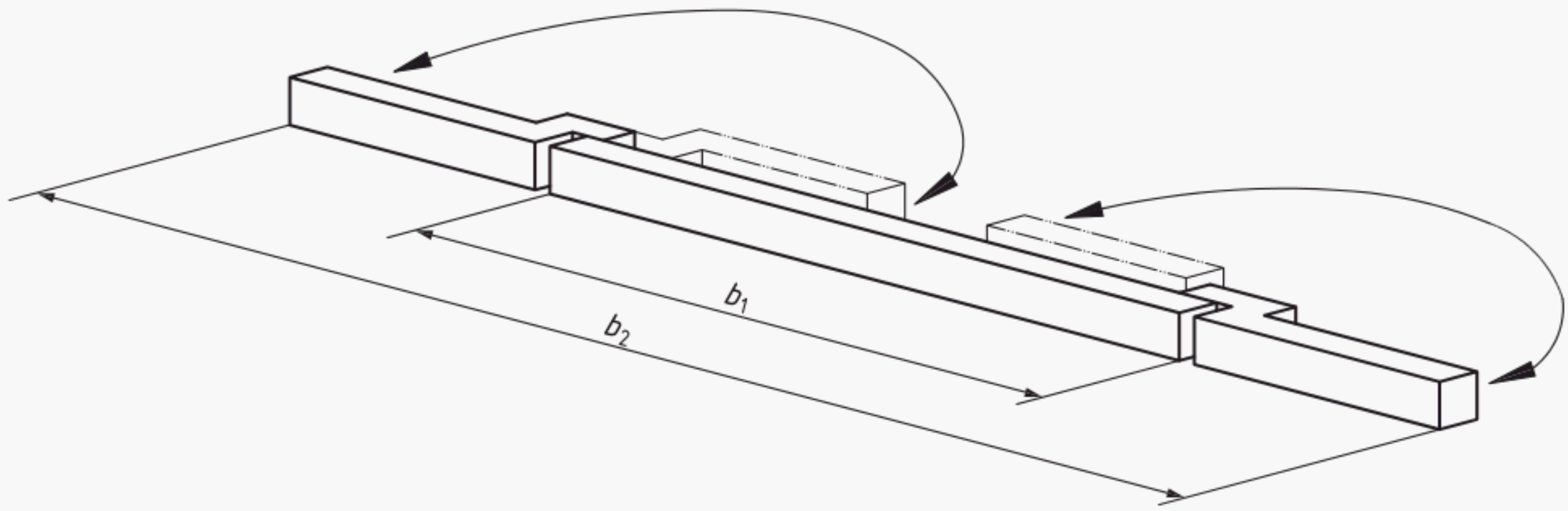

a) Spray bar with central unit and two folding extensions

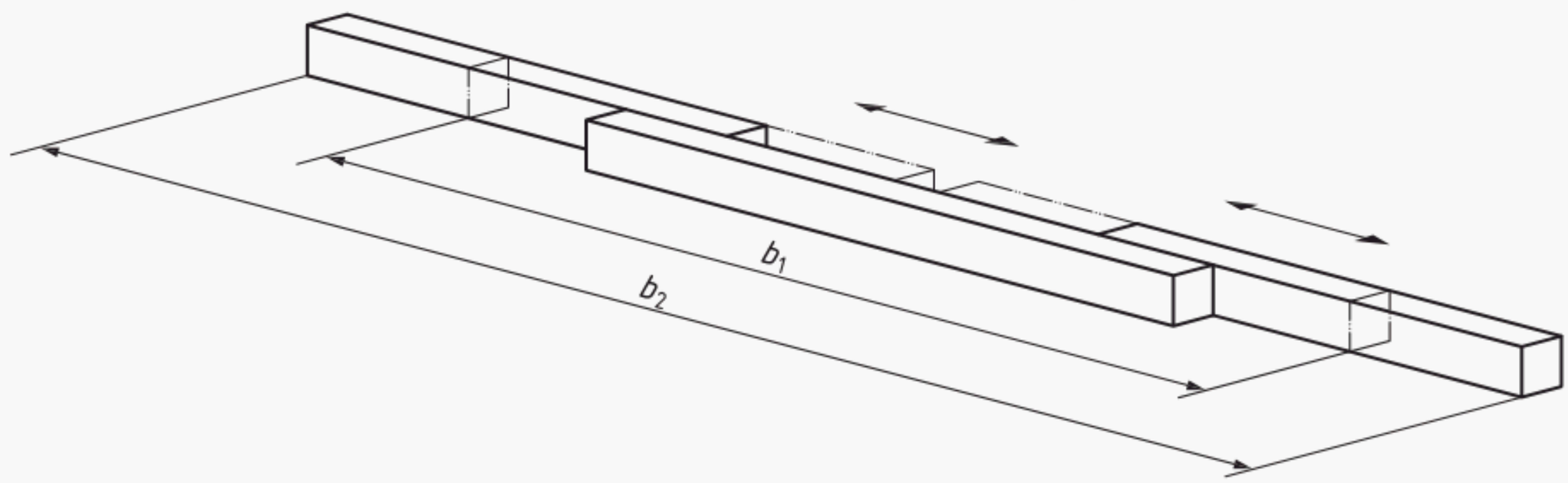

b) Spray bar with central unit and two pull-out extensions

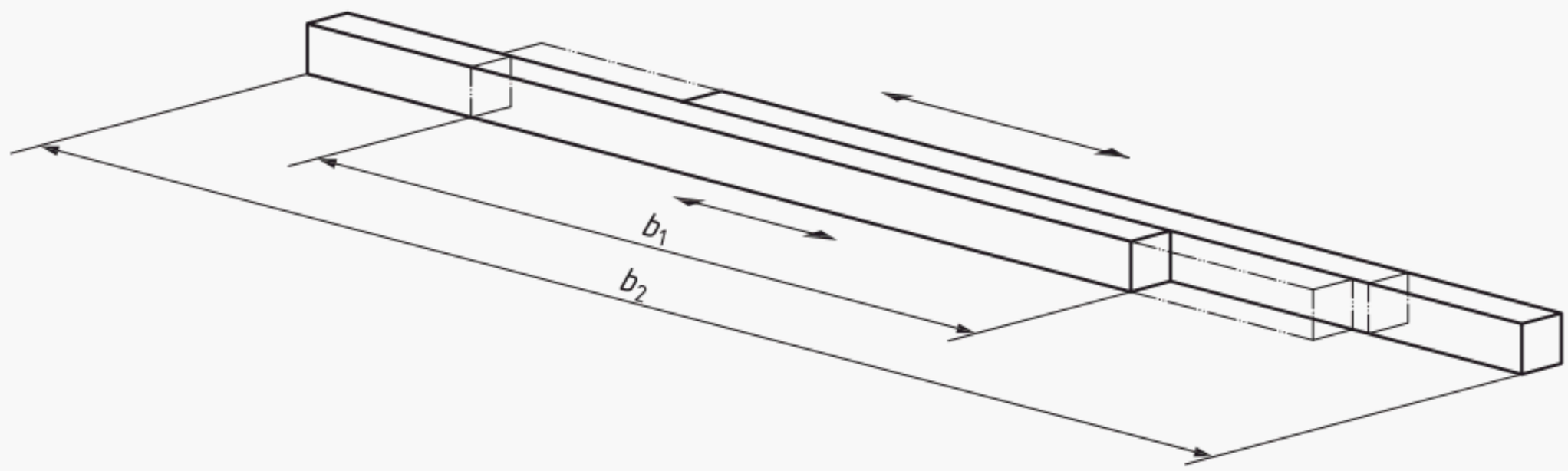

c) Spray bar with two pull-out extensions

Key

b_1 minimum width of bar in transport position

b_2 maximum width of bar in working position

Figure 7 — Different designs of spray bar set-up

© ISO 2020 – All rights reserved

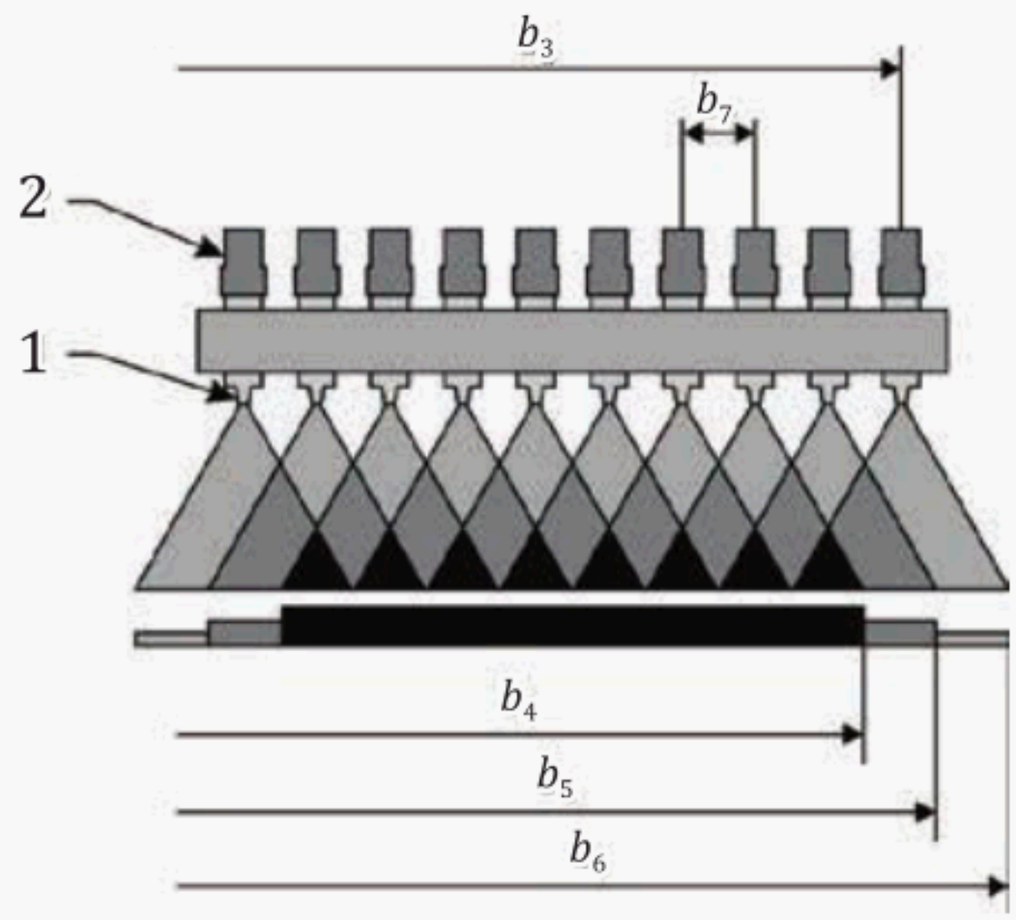

a) Spray bar composed of central unit and two extensions

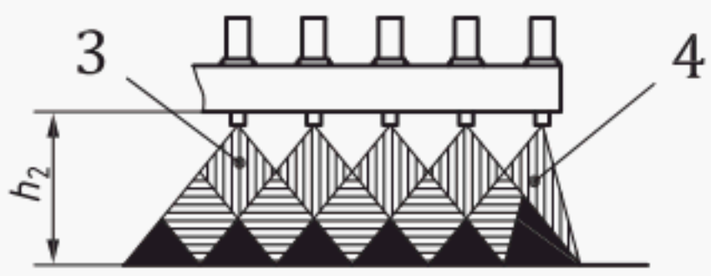

b) Extension bar with correcting nozzle

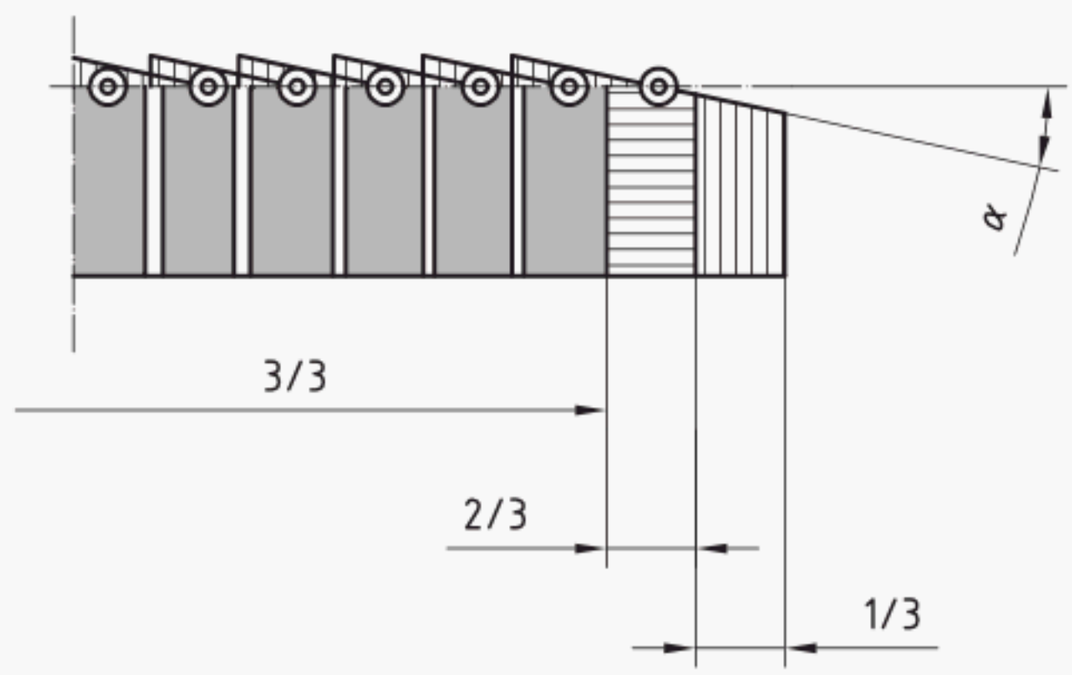

c) Spray bar with the width of the pavement covered with three (3/3), two (2/3) and one (1/3) nozzle(s)

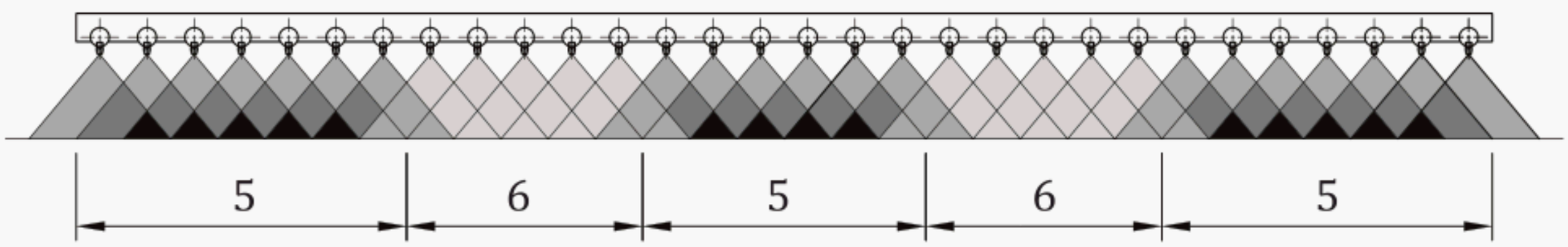

d) Example of spray bar for various dosages for bleeding application

Key

1	nozzle	b_3	bar width
2	nozzle control	b_4	full portion spraying width
3	flat binder jet shape	b_5	medium spraying width
4	end flow correcting nozzle	b_6	covered spraying width
5	nominal dosage (e.g. 1,5 kg/m^2)	b_7	spacing of nozzles
6	complementary dosage (e.g. 1,3 kg/m^2)	h_2	spraying height
α	angle of nozzle placing in top view		

Figure 8 — Spacing of nozzles and binder jet shape

© ISO 2020 – All rights reserved

5.8 Control station performance

5.8.1 Positioning, control and adjustment equipment

The type of equipment shall be specified for adjustment of:

— spray bar height;

— opening of nozzles;

— general control;

— individual control;

— transverse movement of the spray bar;

— spraying width.

5.8.2 Automatic measuring and control equipment

The following equipment shall be specified:

— nominal application rate, kg/m^2;

— pump speed indicator, min^{-1};

— truck speed indicator, km/h;

— spray bar pressure gauge, MPa;

— binder temperature in tank, °C;

— binder density, g/cm^3;

— binder viscosity, mm^2/s;

— automatic correction device for spray bar height, mm;

— automatic proportioning control and adjustment box;

— control to move the vehicle forward at regular speed;

— means of displaying, printing and storing parameters during adjustment and spraying;

— remote control box.

6 Commercial specifications of spreading part of synchronised combined units

6.1 Components list of spreading part of combined units

The components of the spreading part of synchronised combined units and their dimensions shall be specified according to 6.2 and 6.3.

Examples of synchronised combined units are shown in Figures 9, 10 and 11.

© ISO 2020 – All rights reserved

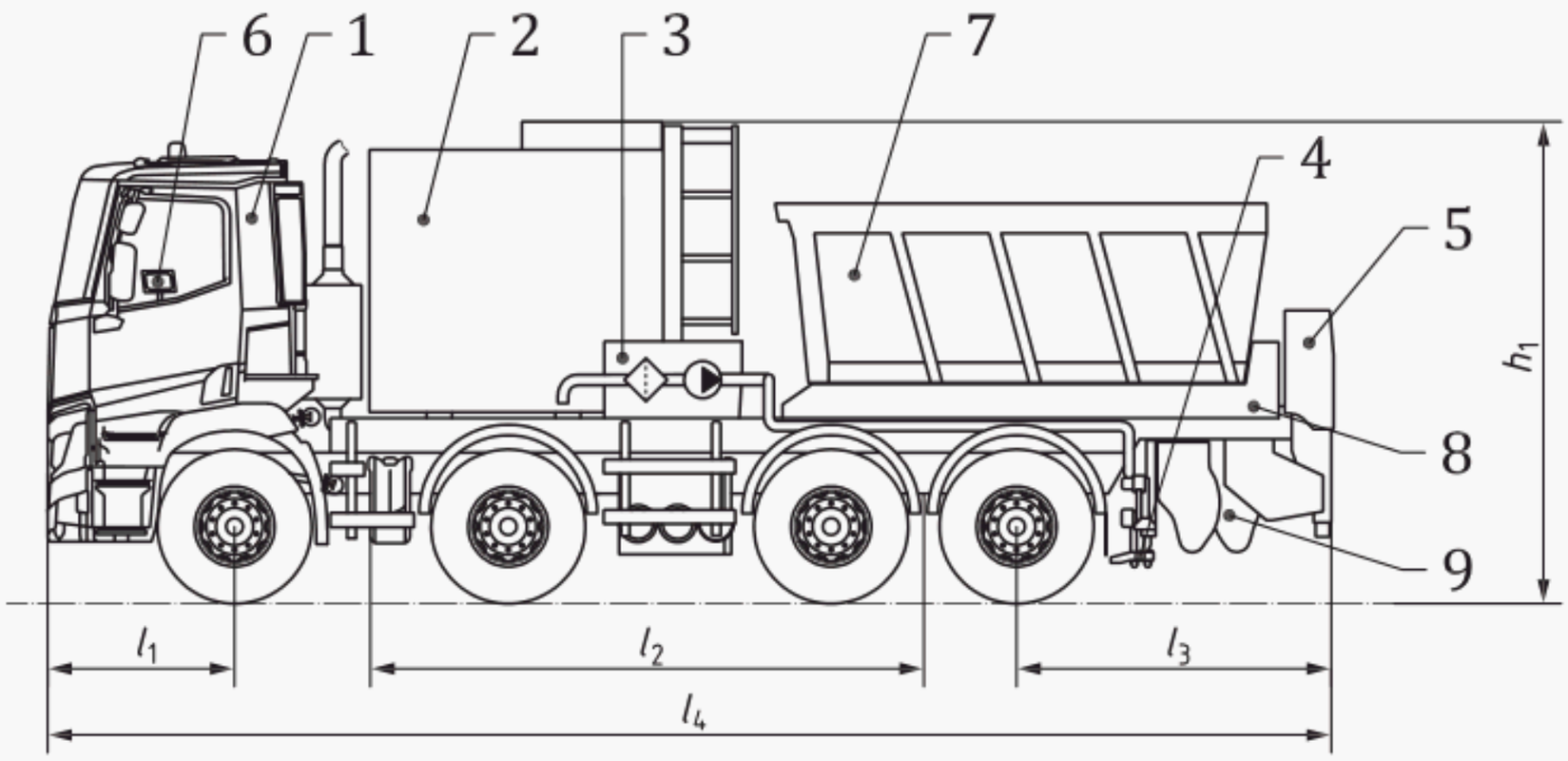

Key

1	vehicle	7	chip hopper
2	tank	8	receiving hopper
3	binder transfer unit	9	chip spreader
4	spray bar	h_1	overall height
5	measuring instruments placed in driver's cab or on the rear part of the vehicle platform	l_1	front overhang
		l_2	wheel base
6	measuring instruments placed in driver's cab or on the rear part of the vehicle platform	l_3	rear overhang,
		l_4	overall length

Figure 9 — Truck-mounted synchronised combined unit

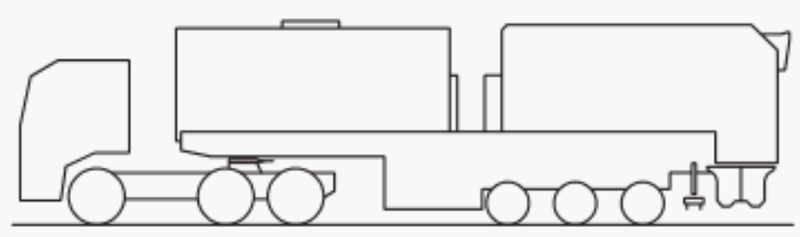

Figure 10 — Semi-trailer synchronised combined unit

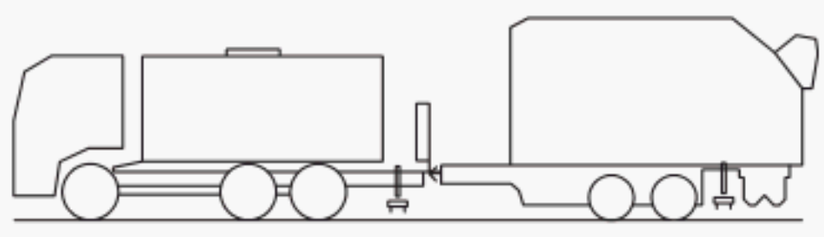

Figure 11 — Bituminous binder sprayer and towed spreader

6.2 Control station performance

6.2.1 Positioning, control and adjustment equipment

In addition to 5.8.1, the following equipment related to aggregates shall be specified for adjustment of:

— opening of gates;

— general control;

— individual control.

© ISO 2020 – All rights reserved

6.2.2 Automatic measuring and control equipment

In addition to 5.8.2, the following parameters related to aggregates shall be specified:

— nominal application rate, l/m^2 or kg/m^2;

— truck speed indicator, km/h;

— size of aggregates, mm;

— shape of aggregates.

6.3 Chip hopper: performance and characteristics

The chip hopper shall be specified by the type of aggregate distribution system:

— inclined hopper bottom (see Figure 12), or

— tipping hopper (see Figure 13), or

— horizontal hopper with extracting system (see Figure 14),

and shall be specified by the additional specifications:

— hopper capacity, m^3;

— centre of gravity.

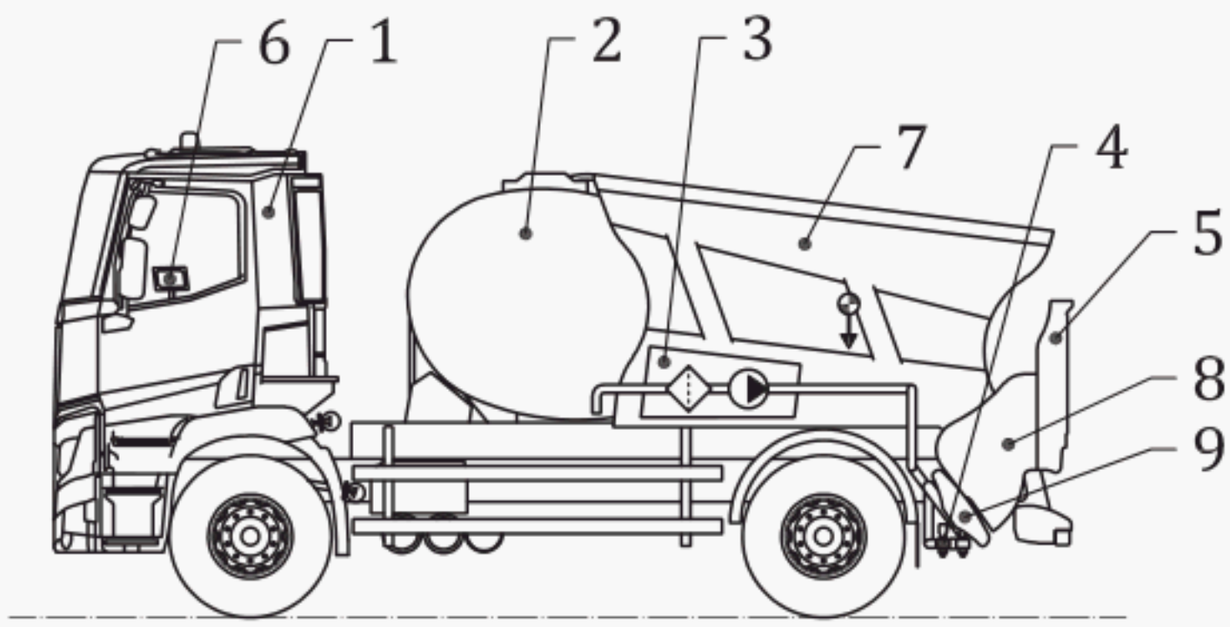

Key

1 vehicle
2 tank
3 binder transfer unit
4 spray bar
5 measuring instruments placed on the rear part of the vehicle platform
6 measuring instruments placed in driver's cab
7 chip hopper
8 receiving hopper
9 chip spreader

Figure 12 — Chip discharge by inclined hopper bottom

© ISO 2020 – All rights reserved

6.2.2 Automatic measuring and control equipment

In addition to 5.8.2, the following parameters related to aggregates shall be specified:

— nominal application rate, l/m^2 or kg/m^2;

— truck speed indicator, km/h;

— size of aggregates, mm;

— shape of aggregates.

6.3 Chip hopper: performance and characteristics

The chip hopper shall be specified by the type of aggregate distribution system:

— inclined hopper bottom (see Figure 12), or

— tipping hopper (see Figure 13), or

— horizontal hopper with extracting system (see Figure 14),

and shall be specified by the additional specifications:

— hopper capacity, m^3;

— centre of gravity.

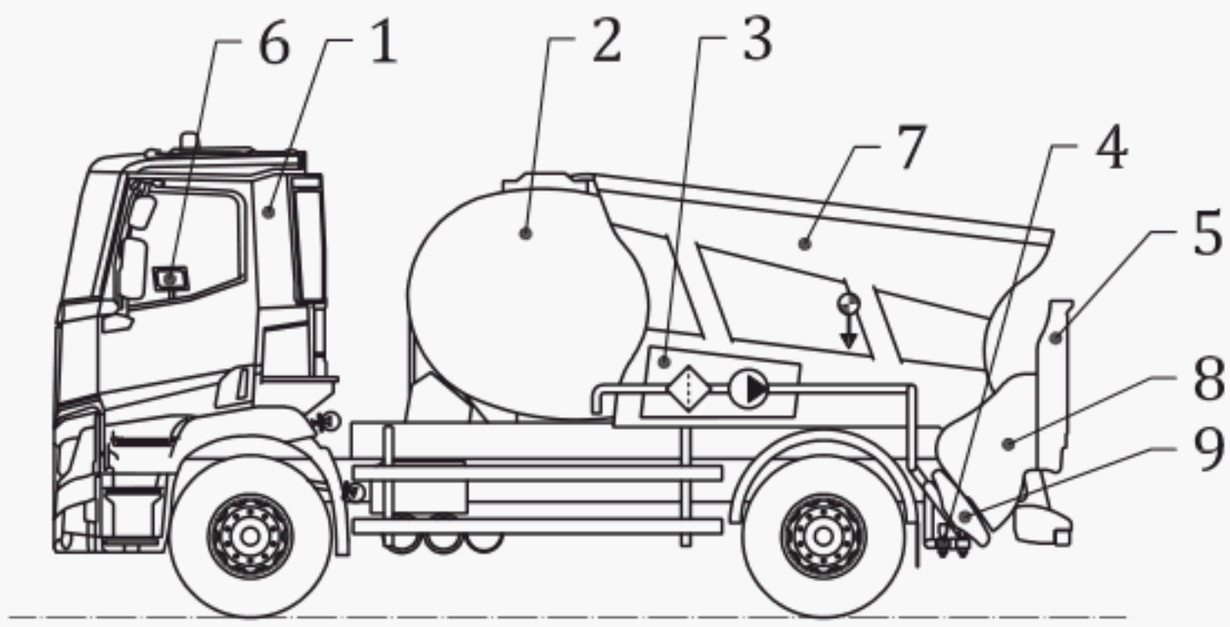

Key

1 vehicle
2 tank
3 binder transfer unit
4 spray bar
5 measuring instruments placed on the rear part of the vehicle platform
6 measuring instruments placed in driver's cab
7 chip hopper
8 receiving hopper
9 chip spreader

Figure 12 — Chip discharge by inclined hopper bottom

© ISO 2020 – All rights reserved

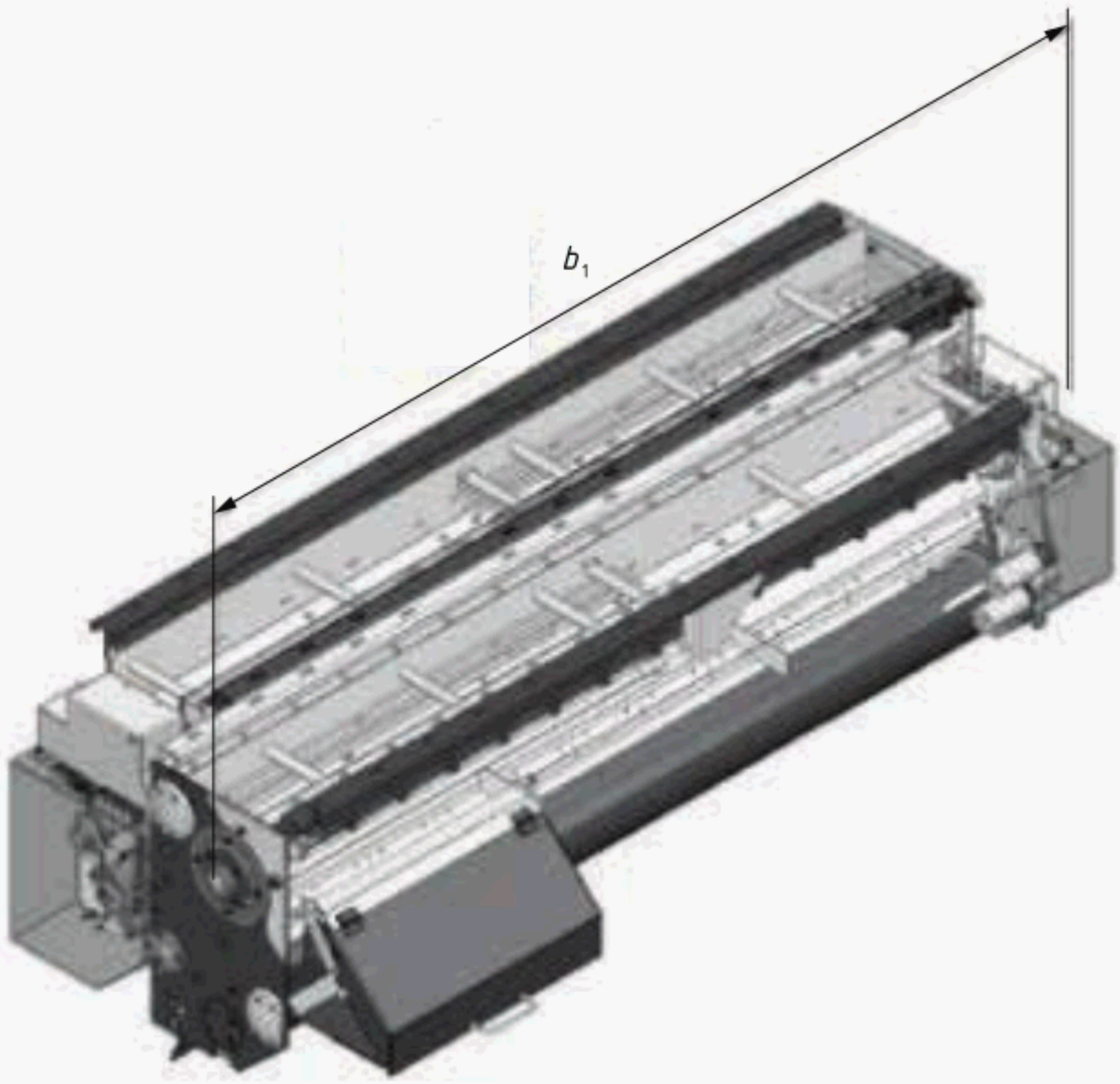

a) Transport position

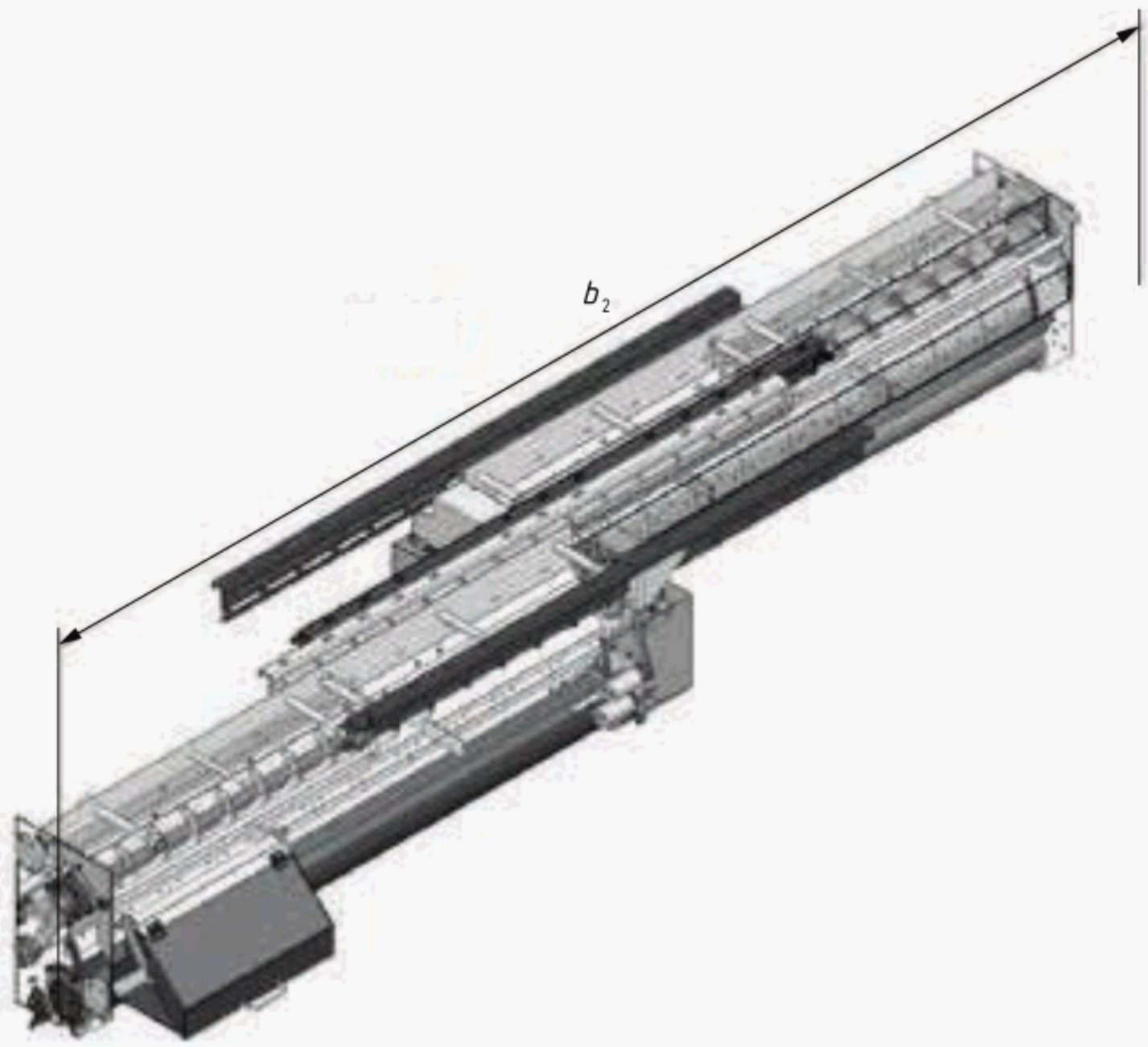

b) Working position

© ISO 2020 – All rights reserved

Key

b_1 minimum width of bar in transport position

b_2 maximum width of bar in working position

Figure 15 — Telescopic chip spreader

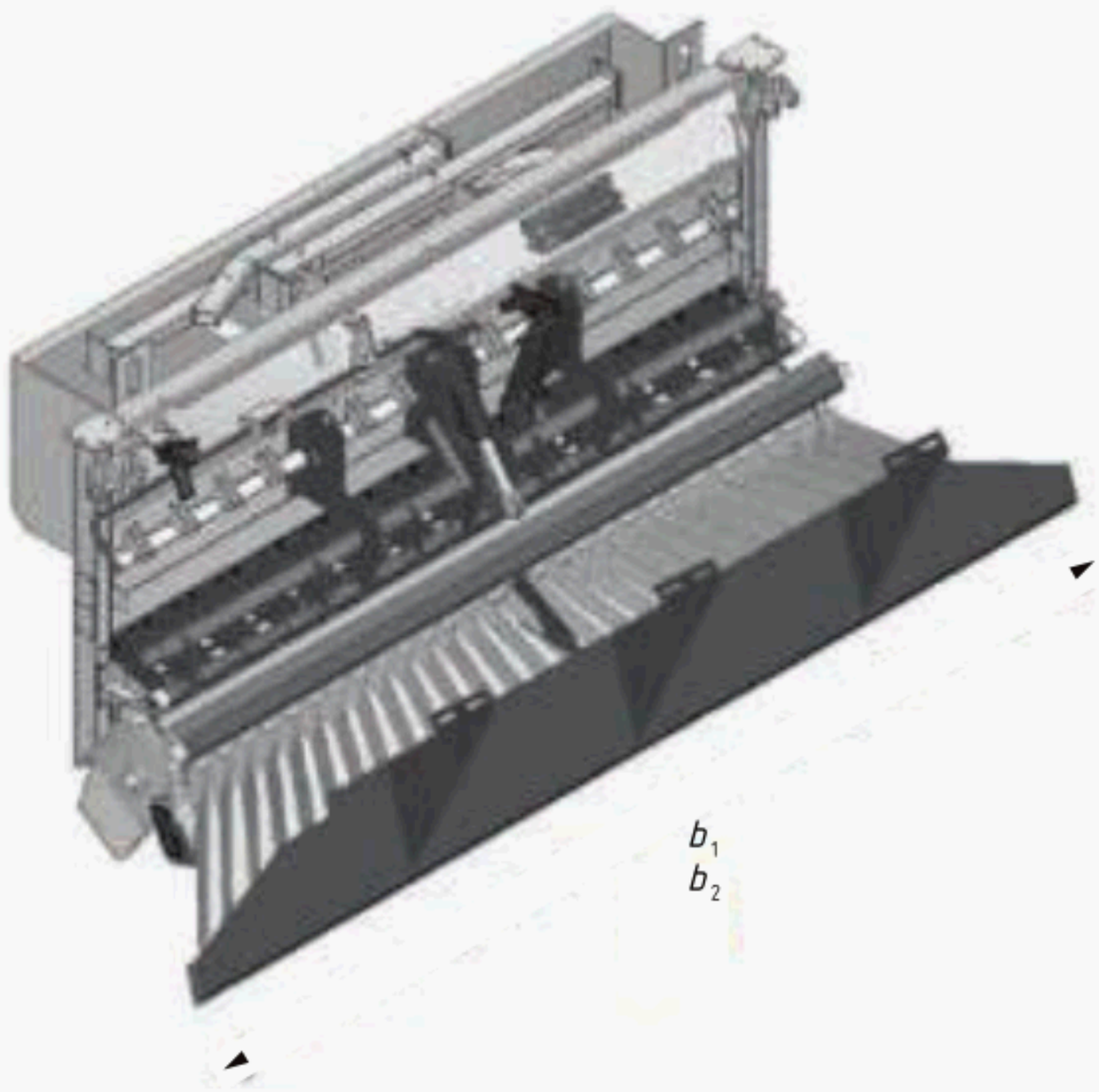

Key

b_1 minimum width of bar in transport position

b_2 maximum width of bar in working position

Figure 16 — Foldable chip spreader

© ISO 2020 – All rights reserved

Bibliography

[1] EN 13020:2016, *Road surface treatment machines — Safety requirements*

© ISO 2020 – All rights reserved

NO COPYING WITHOUT BSI PERMISSION EXCEPT AS PERMITTED BY COPYRIGHT LAW

British Standards Institution (BSI)

BSI is the national body responsible for preparing British Standards and other standards-related publications, information and services.

BSI is incorporated by Royal Charter. British Standards and other standardization products are published by BSI Standards Limited.

About us

We bring together business, industry, government, consumers, innovators and others to shape their combined experience and expertise into standards -based solutions.

The knowledge embodied in our standards has been carefully assembled in a dependable format and refined through our open consultation process. Organizations of all sizes and across all sectors choose standards to help them achieve their goals.

Information on standards

We can provide you with the knowledge that your organization needs to succeed. Find out more about British Standards by visiting our website at bsigroup.com/standards or contacting our Customer Services team or Knowledge Centre.

Buying standards

You can buy and download PDF versions of BSI publications, including British and adopted European and international standards, through our website at bsigroup.com/shop, where hard copies can also be purchased.

If you need international and foreign standards from other Standards Development Organizations, hard copies can be ordered from our Customer Services team.

Copyright in BSI publications

All the content in BSI publications, including British Standards, is the property of and copyrighted by BSI or some person or entity that owns copyright in the information used (such as the international standardization bodies) and has formally licensed such information to BSI for commercial publication and use.

Save for the provisions below, you may not transfer, share or disseminate any portion of the standard to any other person. You may not adapt, distribute, commercially exploit or publicly display the standard or any portion thereof in any manner whatsoever without BSI's prior written consent.

Storing and using standards

Standards purchased in soft copy format:

- A British Standard purchased in soft copy format is licensed to a sole named user for personal or internal company use only.
- The standard may be stored on more than one device provided that it is accessible by the sole named user only and that only one copy is accessed at any one time.
- A single paper copy may be printed for personal or internal company use only.

Standards purchased in hard copy format:

- A British Standard purchased in hard copy format is for personal or internal company use only.
- It may not be further reproduced – in any format – to create an additional copy. This includes scanning of the document.

If you need more than one copy of the document, or if you wish to share the document on an internal network, you can save money by choosing a subscription product (see 'Subscriptions').

Reproducing extracts

For permission to reproduce content from BSI publications contact the BSI Copyright and Licensing team.

Subscriptions

Our range of subscription services are designed to make using standards easier for you. For further information on our subscription products go to bsigroup.com/subscriptions.

With **British Standards Online (BSOL)** you'll have instant access to over 55,000 British and adopted European and international standards from your desktop. It's available 24/7 and is refreshed daily so you'll always be up to date.

You can keep in touch with standards developments and receive substantial discounts on the purchase price of standards, both in single copy and subscription format, by becoming a **BSI Subscribing Member.**

PLUS is an updating service exclusive to BSI Subscribing Members. You will automatically receive the latest hard copy of your standards when they're revised or replaced.

To find out more about becoming a BSI Subscribing Member and the benefits of membership, please visit bsigroup.com/shop.

With a **Multi-User Network Licence (MUNL)** you are able to host standards publications on your intranet. Licences can cover as few or as many users as you wish. With updates supplied as soon as they're available, you can be sure your documentation is current. For further information, email cservices@bsigroup.com.

Revisions

Our British Standards and other publications are updated by amendment or revision.

We continually improve the quality of our products and services to benefit your business. If you find an inaccuracy or ambiguity within a British Standard or other BSI publication please inform the Knowledge Centre.

Useful Contacts

Customer Services
Tel: +44 345 086 9001
Email: cservices@bsigroup.com

Subscriptions
Tel: +44 345 086 9001
Email: subscriptions@bsigroup.com

Knowledge Centre
Tel: +44 20 8996 7004
Email: knowledgecentre@bsigroup.com

Copyright & Licensing
Tel: +44 20 8996 7070
Email: copyright@bsigroup.com

BSI Group Headquarters

389 Chiswick High Road London W4 4AL UK

bsi.