BS ISO 16763:2016

BSI Standards Publication

Graphic technology — Post-press — Requirements for bound products

bsi.

...making excellence a habit.™

BS ISO 16763:2016

BSI Standards Publication

Graphic technology — Post-press — Requirements for bound products

bsi.

...making excellence a habit.™

BS ISO 16763:2016

INTERNATIONAL STANDARD

ISO 16763

First edition
2016-03-01

Graphic technology — Post-press — Requirements for bound products

Technologie graphique — Exigences pour la finition — Produits reliés

Reference number
ISO 16763:2016(E)

© ISO 2016

COPYRIGHT PROTECTED DOCUMENT

© ISO 2016, Published in Switzerland

All rights reserved. Unless otherwise specified, no part of this publication may be reproduced or utilized otherwise in any form or by any means, electronic or mechanical, including photocopying, or posting on the internet or an intranet, without prior written permission. Permission can be requested from either ISO at the address below or ISO's member body in the country of the requester.

ISO copyright office
Ch. de Blandonnet 8 • CP 401
CH-1214 Vernier, Geneva, Switzerland
Tel. +41 22 749 01 11
Fax +41 22 749 09 47
copyright@iso.org
www.iso.org

Contents

Page

Foreword ..... **iv**
Introduction ..... **v**
1 Scope **1**
2 Normative references **1**
3 Terms and definitions **1**
3.1 Conversion processes 1
3.2 Binding methods 2
3.3 Product and structure 3
3.4 Component and binding material 4
3.5 Binding quality evaluation 5
4 Process requirements **5**
4.1 General 5
4.2 Cutting for folding 6
4.2.1 Preparation 6
4.2.2 Cutting accuracy 6
4.3 Folding 7
4.3.1 Fold types 7
4.3.2 Folding control 8
4.3.3 Folding quality 8
4.4 Assembling into blocks 8
4.4.1 Gathering 8
4.4.2 Pasting on endpapers 8
4.4.3 Inserting 9
4.5 Binding 9
4.5.1 Adhesive binding 9
4.5.2 Thread sewing 10
4.5.3 Thread sealing 11
4.5.4 Lock-stitching 11
4.5.5 Saddle-stitching 11
4.5.6 Single-sheet binding (spiral, wire-o, comb) 12
4.6 Trimming 13
4.7 Case-bound book production 14
4.7.1 General 14
4.7.2 Rounding and backing 14
4.7.3 Inserting a bookmark 14
4.7.4 Back-lining 14
4.7.5 Attaching headbands 14
4.7.6 Case construction 14
4.7.7 Casing-in 16
4.7.8 Joint forming 17
4.7.9 Adding a jacket 17
4.8 Paper-bound book production 17
4.8.1 Size of the cover 17
4.8.2 Weight of the cover 18
4.8.3 Cover application 18
5 Binding quality control **18**
5.1 General 18
5.2 Sampling 18
5.3 Inspection of the final products 18
Annex A (normative) **Method to measure degree of warping of finished products** **20**
Bibliography **21**

© ISO 2016 – All rights reserved

Foreword

ISO (the International Organization for Standardization) is a worldwide federation of national standards bodies (ISO member bodies). The work of preparing International Standards is normally carried out through ISO technical committees. Each member body interested in a subject for which a technical committee has been established has the right to be represented on that committee. International organizations, governmental and non-governmental, in liaison with ISO, also take part in the work. ISO collaborates closely with the International Electrotechnical Commission (IEC) on all matters of electrotechnical standardization.

The procedures used to develop this document and those intended for its further maintenance are described in the ISO/IEC Directives, Part 1. In particular the different approval criteria needed for the different types of ISO documents should be noted. This document was drafted in accordance with the editorial rules of the ISO/IEC Directives, Part 2. www.iso.org/directives

Attention is drawn to the possibility that some of the elements of this document may be the subject of patent rights. ISO shall not be held responsible for identifying any or all such patent rights. Details of any patent rights identified during the development of the document will be in the Introduction and/or on the ISO list of patent declarations received. www.iso.org/patents

Any trade name used in this document is information given for the convenience of users and does not constitute an endorsement.

For an explanation on the meaning of ISO specific terms and expressions related to conformity assessment, as well as information about ISO's adherence to the WTO principles in the Technical Barriers to Trade (TBT) see the following URL: Foreword - Supplementary information

The committee responsible for this document is ISO/TC 130, *Graphic technology*.

© ISO 2016 – All rights reserved

Introduction

Bound products, such as booklets, brochures, case-bound or paper-bound books, etc., are commonly used in daily life across countries. Post-press is the last but not the least process in the production flow of bound products, which includes pre-press, printing and post-press. This International Standard introduces the use of the standardization approach to accomplish the conversion of printed sheets into end products and to achieve the desired result.

Post-press production has a significant effect on the appearance, usability and durability of bound products. The aim of this International Standard is to address the major quality elements in post-press production of such products.

Post-press production of bound products involves four major processes: cutting, folding, assembling and binding. As the process steps are interrelated and sequential, any deviations from current practice can lead to deficiencies in the end product. Accordingly, this International Standard specifies technical requirements and tolerances for the outcomes of processing operations in order to avoid quality deficiencies. Although material specification is not covered in this International Standard because this is not normally the responsibility of the finisher, it is recommended that, if a long life is required for the bound product, ISO 9706 gives guidance.

This International Standard is expected to benefit both manufacturers and customers in the printing and publishing industries in terms of the production and assessment of bound products.

The use of this International Standard is intended to

— enhance overall process control of the production of bound products,

— enhance production efficiency and accuracy in post-press processes,

— reduce occurrence of remakes resulting from inadequate working methods, and

— promote transparency of the quality requirements of post-press operations in a universally understood manner.

This International Standard does not cover special effect or surface decorations.

© ISO 2016 – All rights reserved

INTERNATIONAL STANDARD ISO 16763:2016(E)

Graphic technology — Post-press — Requirements for bound products

1 Scope

This International Standard specifies quality requirements and tolerances of bound products and intermediate components. It is applicable to products requiring industrial binding, for example, books, magazines, catalogues and brochures.

2 Normative references

The following documents, in whole or in part, are normatively referenced in this document and are indispensable for its application. For dated references, only the edition cited applies. For undated references, the latest edition of the referenced document (including any amendments) applies.

ISO 534, *Paper and board — Determination of thickness, density and specific volume*

ISO 536, *Paper and board — Determination of grammage*

3 Terms and definitions

For the purposes of this document, the following terms and definitions apply.

3.1 Conversion processes

3.1.1
backing
shaping a ridge or shoulder on each side of the spine of a book block after rounding, ideally complemented by gluing a material stripe on the spine with the same width as the spine

3.1.2
binding
holding signatures or sheets together along one edge by means of staples, adhesives, thread, wire or other means

Note 1 to entry: Most of the time, the binding process also includes attaching a cover to the bound block.

3.1.3
casing in
gluing endpapers to the inside of the case to anchor the bound and trimmed book block into the case

3.1.4
cutting
using a mechanical device (e.g. blade) to reduce sheets to a size that is suitable for further processing

3.1.5
creasing
indenting lines into substrates, such as cardboard or paper, to guide subsequent folding operations and to prevent cracking

© ISO 2016 – All rights reserved

3.1.6
folding
bending a printed or blank substrate upon itself in order to achieve specified dimensions and folding layouts

Note 1 to entry: It is important that the correct imposition is used at the printing stage in order to obtain the sequence of pages in a bound product, as well as to compensate the creep.

3.1.7
gathering
assembling either by collating of signatures to form a multi-layer block or by inserting one signature inside another signature to form a single-layer block

3.1.8
gluing-off
applying glue on the spine of a thread sewn or thread sealed book block

3.1.9
inserting
assembling signatures one inside another or putting loose inserts into print products

3.1.10
back-lining
covering the glued spine by a material stripe with an extension on front and back side of the book block

3.1.11
rounding
forming, by mechanical or manual manipulation, the spine of a book block into a convex shape prior to backing

3.1.12
trimming
cutting off the edges of a blank or printed substrate or book block to achieve the required format

3.2 Binding methods

3.2.1
adhesive binding
converting process used to join, by gluing individual pages or signatures and covers into a final product

Note 1 to entry: There are different types of adhesive binding that result from the different processes of spine preparation prior to the application of adhesive; commonly used types are notch binding and perfect binding.

3.2.2
lock-stitching
sewing method where two threads, an upper and a lower, are used to link together in stitching

Note 1 to entry: This method is used mainly for identity cards and passports.

3.2.3
notch binding
type of adhesive binding where slots are cut into the spine edges of the gathered signatures to facilitate the penetration of adhesive

3.2.4
perfect binding
type of adhesive binding in which gathered signatures or sheets are connected to a book block by applying glue on the binding edge after executing spine preparation techniques

Note 1 to entry: In the broad sense, perfect binding is also used as an alternate term for adhesive binding.

© ISO 2016 – All rights reserved

3.2.5
saddle-stitching
binding method where a set of folded and inserted signatures is bound with stitches or staples driven down through the centre fold of the spine

Note 1 to entry: This method is used mainly for menus, brochures and magazines.

3.2.6
single-sheet binding
type of non-adhesive binding in which the single sheets are held together by a plastic or metal binding tool (spiral, wire-o and comb), showing a particular good lay-flat behaviour.

Note 1 to entry: This method is used mainly for products that need to lay flat when opened, such as board books, cookbooks, notebooks, calendars and manuals.

3.2.7
thread sealing
sealing method used as an economical alternative to thread sewing, where the signatures are bound with single thread staples containing a thermoplastic coating during the folding process

3.2.8
thread sewing
binding method where the gathered signatures are sewn together with thread before being inserted into a cover or book case

Note 1 to entry: There are two thread sewing methods: sewing with stitches on a straight line and sewing with stitches on a staggered line.

3.3 Product and structure

3.3.1
binding edge
edge of a book block along which signatures or pages are bound by means of staples, adhesives, thread, wire or other means

3.3.2
binding margin
white space that is left blank between the binding edge and the printed area of a page

3.3.3
case-bound book
set of blank, written or printed pages bound in a case made of solid boards glued onto the end paper of a book block

3.3.4
bound product
book or book block, made up of one or more folded sheets or single sheets, held together by a particular binding method, with or without a cover

3.3.5
brochure
set of blank, written or printed pages bound together in a cover made of cardboard (soft-cover)

3.3.6
fore edge
front edge of a book or book block that is opposite, and parallel, to its binding edge

3.3.7
head
top edge of a book or a book block

© ISO 2016 – All rights reserved

3.3.8
joint
one of two grooves that run head to tail on the outside of the case, front and back, in the gap between spine inlay and case boards

3.3.9
Omega staples
variant of wire staples with shaped eyelets to be used as file holes

Note 1 to entry: Loop stitch is same as Omega staple.

3.3.10
shoulder
outer edge on each side of the rounded spine of a book block that is formed by the backing process

3.3.11
spine
back of a book block or outer portion of a book where the pages are held together, opposite to the fore edge

3.3.12
squares
edges of the book case extending beyond the book block at the head, tail and fore edges

3.3.13
tail
bottom edge of a book or a book block

3.4 Component and binding material

3.4.1
book block
part of a case-bound book or brochure, consisting of a trimmed or untrimmed bound block of sheets, prior to the application of the book case or cover

3.4.2
bookmark
fabric ribbon, one end of which is normally glued onto the top of the spine, inserted between the pages of a book to mark the reader's place

3.4.3
case
hardcover of a book composed of front and rear boards, spine inlay and covering material

3.4.4
cover
flexible or rigid cardboard connected to the book block to protect and strengthen it

3.4.5
covering material
flexible material, which can be paper or fabric, attached to the case boards and the spine inlay of a case

3.4.6
end paper
folded sheet used at the front and back of a book block to connect it with the case using glue

3.4.7
headband
decorative fabric band glued onto the upper and lower edges of the spine of a book block

© ISO 2016 – All rights reserved

3.4.8
multi-layer block
book block assembled by collation of signatures in page order

3.4.9
overhang
part of the covering material that extends beyond the edges of the case boards and spine inlay before turning-in

3.4.10
signature
printed sheet, single or multiple folded to be used as part of a book block

3.4.11
single-layer block
book block consisting of a single signature or assembled by inserting signatures into one another, which can be bound to form a thin magazine, a booklet or document with a limited number of pages

3.4.12
spine inlay
stripe of cardboard or solid board attached with gaps between the front and rear boards of a case

3.4.13
turn-in
overhang that is turned over the edges of the case boards and spine inlay onto their inside surface of the case

3.5 Binding quality evaluation

3.5.1
glue penetration
uncontrolled and inhomogeneous penetration of glue between the sheets of a book block

3.5.2
grain direction
direction in which the majority of the fibres in a piece of paper, cardboard or solid board are aligned and the direction in which the warp threads run in cloth

Note 1 to entry: The grain direction in a sheet of machine-made paper is also referred to as the machine direction.

Note 2 to entry: The sheet is called long grain if the larger dimension is parallel to the machine direction (MD). The sheet is called short grain if the larger dimension is parallel to the cross direction (CD).

Note 3 to entry: In book binding, the right grain direction is preferentially parallel to the binding edge.

4 Process requirements

4.1 General

Post-press production of bound products is carried out in a series of process operations. A typical workflow is shown in Figure 1 and, for each operation, the number of the clause describing it is given in parentheses.

© ISO 2016 – All rights reserved

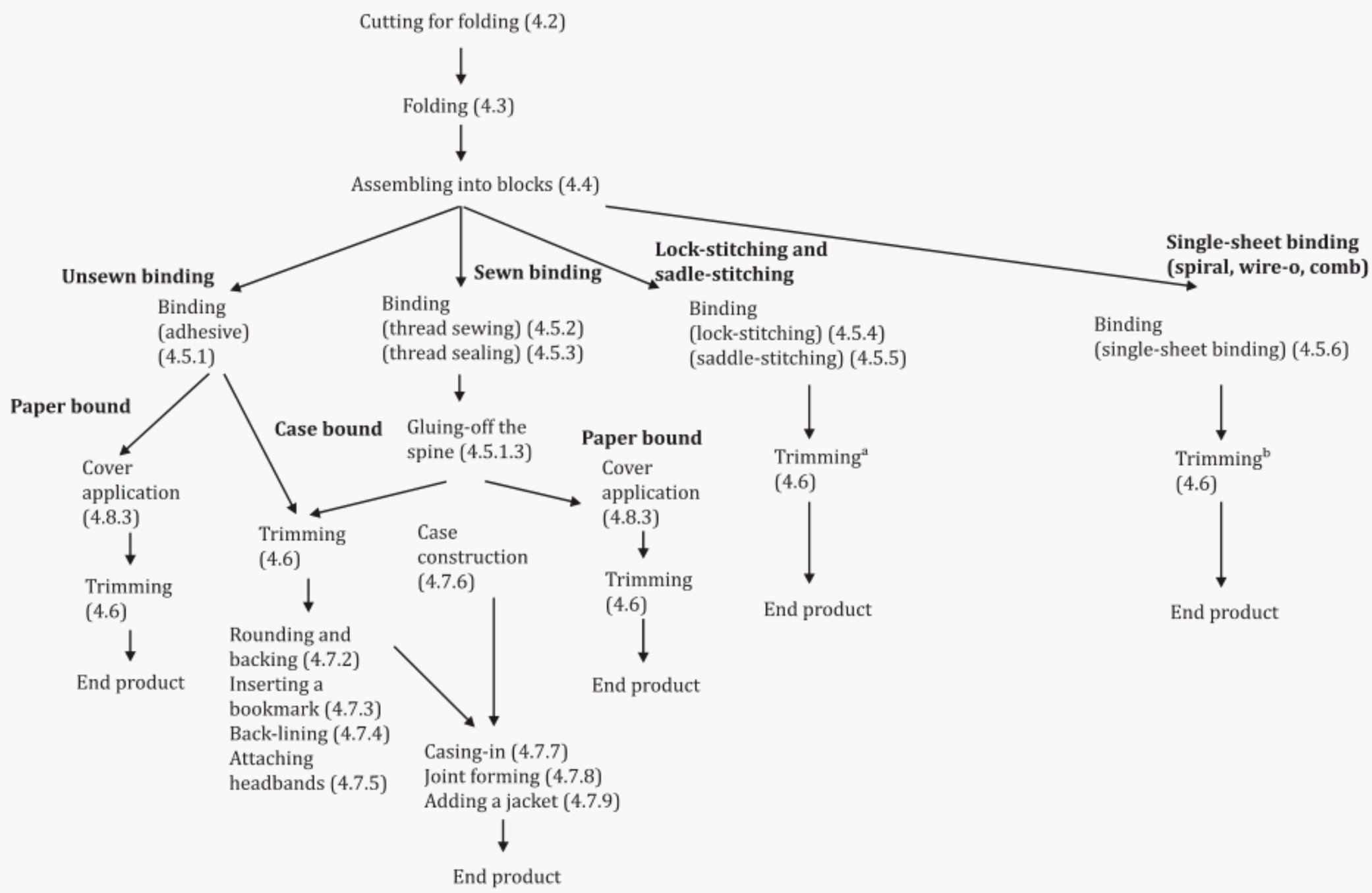

Key

a For some lock-stitched blocks, cover application (if necessary) takes place before trimming.

b For single-sheet binding, trimming (if necessary) takes place before binding.

NOTE The number in parentheses in each box refers to the number of the relevant clause in this International Standard.

Figure 1 — Workflow chart for bound products

All processes shall be performed in a way that no markings, ink transfer, wrinkles, cracks, etc. occur. There shall be prior information exchange between parties on all aspects of quality of the end or final product. This includes information on the standardized climatic condition of the region of use.

4.2 Cutting for folding

4.2.1 Preparation

Prior to the cutting operation, tests for cutting pressure shall be performed to ensure the avoidance of marking in subsequent processes.

4.2.2 Cutting accuracy

4.2.2.1 Piles of sheets

A first master edge (usually identifiable by the printed register mark) shall be defined, either parallel or perpendicular to the printed content, and a second master edge shall be defined; the angle between them shall be 90° ± 0,2°. If the angle between the master edges cannot be guaranteed, the following edge and squareness tolerances shall apply.

 © ISO 2016 – All rights reserved

The squareness and dimensions of a cut pile shall be determined by taking the measurement of two sample sheets (one from the top and one from the bottom of the pile). The squareness of the sheet shall be determined by measuring both the horizontal and vertical edges (W1, W2, H1, H2) and the diagonal lines (X, Y) as shown in Figure 2, where the squareness tolerance is given by the values of W1 – W2, H1 – H2 and X – Y, each value shall be ±0,5 mm. For dimensional accuracy tolerance, the value shall be 1,0 mm per 1 000 mm.

A calibrated measuring device shall be used to take measurements.

Figure 2 — Measurement of edges and diagonal lines for squareness

4.2.2.2 Web-fed cutting

In cutting for web-fed production, the position of the cutting edge and any perforation shall be within 1,0 mm of the design cutting position.

4.2.2.3 Cutting quality

After any cutting operation and removal of the waste from the cut edges, the material shall match the desired shape and dimensions and be free from pressure marks, knife marks, ink transfer, breaks and burring due to a blunt cutting instrument.

4.3 Folding

4.3.1 Fold types

The appropriate fold type and imposition schema for a signature is provided as part of the job information.

© ISO 2016 – All rights reserved

4.3.2 Folding control

Folded products should show no cracking along the fold or any wrinkles.

NOTE To prevent cracking, pre-creasing along fold lines can be carried out and, to prevent wrinkles, perforation can be carried out.

4.3.3 Folding quality

Measurement for folding accuracy shall be taken on the last folding position using reopened unbound signatures under a graduated magnifier. The deviation tolerances between the last folding position and the folding marks for different numbers of folds shown in Table 1 shall apply. For papers of higher grammage, fewer folds should be made. The grammage of paper shall be determined as described in ISO 536.

Table 1 — Deviation tolerance for folding accuracy

Number of folds	Deviation tolerance mm	Applicability of the tolerance
1 fold	0,60	Substrates up to 200 g/m^2
2 folds	0,70	Substrates up to 180 g/m^2
3 folds	0,90	Substrates up to 150 g/m^2
4 folds	1,00	Substrates up to 100 g/m^2

NOTE If papers have a high bulk, the folding accuracy will be affected. The basis weight is intended as a guide. If papers with higher basis weights are to be folded more often than indicated in Table 1, larger folding deviations may result.

4.4 Assembling into blocks

4.4.1 Gathering

During gathering, signatures shall be aligned both to the leading edge and to the spine with a deviation tolerance of ±0,5 mm. The correctness of the sequence of signatures shall be checked (either visually by collating marks or automatically by an inspection system).

NOTE Gathering can be performed in more than one process to form multi-layer blocks or single-layer blocks.

If an overlap is required for a gathering operation, the trim-cut overlap should be appropriate to the device used.

NOTE The trim-cut overlap is usually a minimum of 5 mm.

4.4.2 Pasting on endpapers

The fold of each endpaper on the first and last signatures respectively should have an offset of (1,5 ± 0,5) mm from the outermost fold of the signature. The adhesive line shall be straight and have a maximum width of 5,0 mm, clear of ink or varnish. The endpaper shall be aligned with the signature on the head. See Figure 3.

© ISO 2016 – All rights reserved

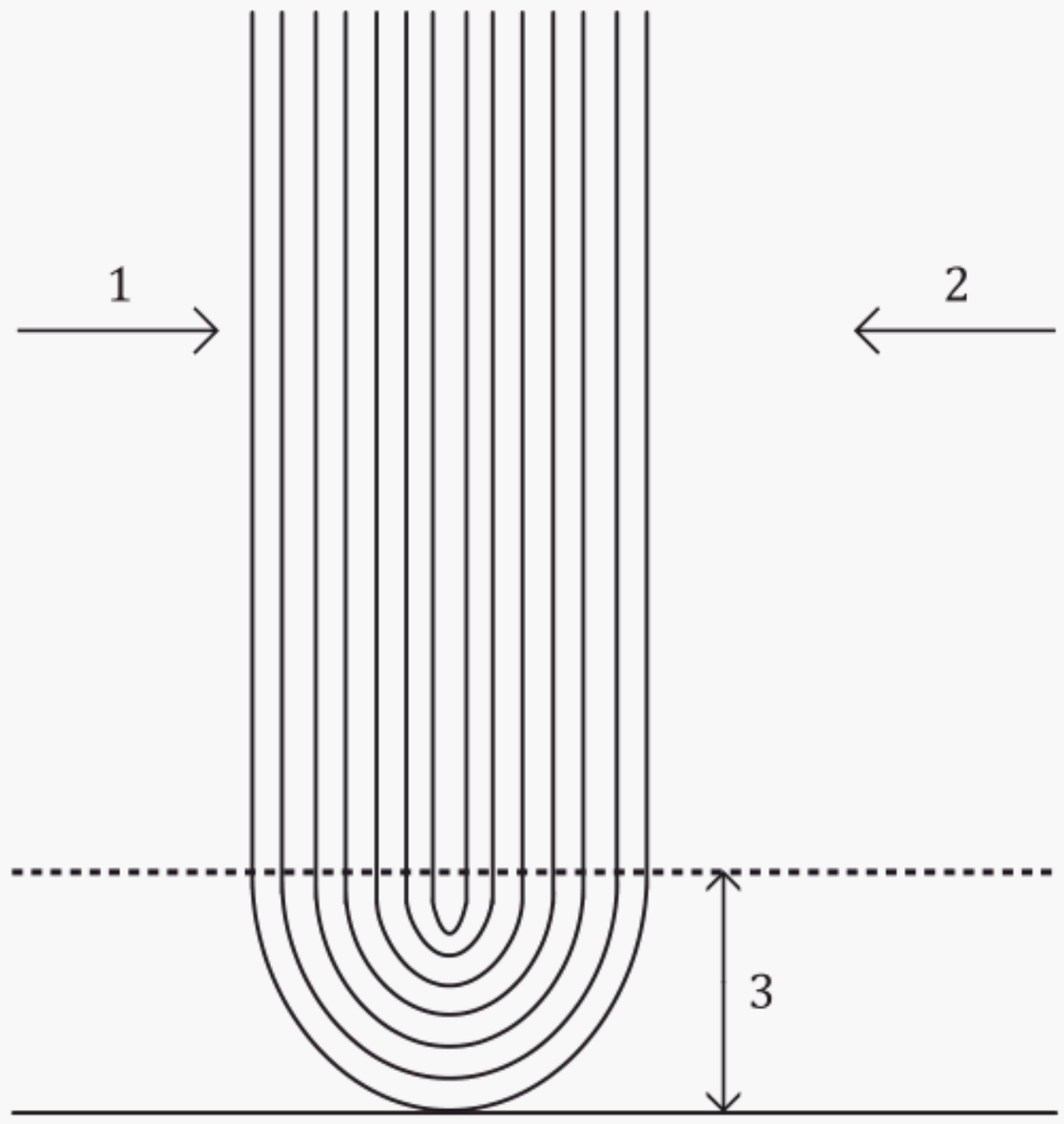

Key

1 folded signature

2 endpaper

3 offset

Figure 3 — Position of the endpaper

4.4.3 Inserting

When other folded sheets or loose inserts need to be inserted into a block, the following criteria shall be observed.

a) The size of any insert shall not be larger than the size of the normal signatures in the end product.

b) Different inserts, for example a single insert, an odd-sized insert or fold-outs, may be glued or sewn into the block by machine or manually.

c) The size of any fold-outs shall be at least 2,0 mm smaller than the final product size, so as to avoid any over-cut in trimming. The four sides of the fold-outs should be parallel to those of the block.

d) Odd-sized inserts shall be placed between full-sized signatures.

4.5 Binding

4.5.1 Adhesive binding

4.5.1.1 Notch binding

Notches cut into the folds of the gathered signatures shall have the depth and spacing compatible with the paper type and the composition of the adhesive. Usually, each notch should go through the folds and may be from 15 mm to 18 mm in length, with a spacing of 3,0 mm to 5,0 mm.

© ISO 2016 – All rights reserved

4.5.1.2 Perfect binding

In perfect binding, the folds of the gathered signatures shall be milled off. If single sheets are being bound, then they can be built up to form the block without the need to grind anything off. Depending on the paper thickness and the number of pages per signature, the depth of milling shall ensure the separation of the block into individual sheets. Notching and roughening may be applied to improve the adhesion. During all these processes the alignment of the signatures shall be kept. The milling shall be even across the spine. There should be no printing, varnishing or previously applied glue in the area reserved for gluing, which should also be free of dust.

4.5.1.3 Application of spine and side glue

The coating layer of the adhesive should be bubble-free and uniform with a thickness in accordance with the technical specification of the glue manufacturer.

The operating temperature of the adhesive and any other operational requirements shall be in accordance with the technical specification of the glue manufacturer.

Glue penetration of more than 1,0 mm on a significant number of pages should be avoided.

The thickness of the side glue should be kept as low as possible. Excess glue shall not be visible anywhere in the final product.

4.5.2 Thread sewing

Thread sewing should be used for products of high durability, frequent usage and also for papers with a high basis weight.

The thread used shall be stronger than the substrate. The stitches shall be evenly distributed on the spine fold. The stitching holes shall align with the centre fold with a deviation tolerance of ±0,5 mm. The tension in the thread should be such that the signatures are bound tightly together without there being any wrinkles or tearing. Any torn thread or missing stitches shall be avoided.

Any signature of the thread sewn book block shall be aligned to the head with a tolerance of ±0,5 mm.

For a good bonding of the signatures of a book block, the number of stitching groups should correspond to the spine length, the stitching arrangement in Table 2 is recommended.

Staggered stitching should be used to avoid spine build-up, if necessary.

The thread sewing process shall be followed by the process of gluing-off the spine. The requirements of 4.5.1.3 apply.

Table 2 — The stitching arrangement for different spine lengths of a book block

Spine length of book block mm	Maximum distance from the head and to the tail left without stitches mm	Minimum number of stitching groups
>420	25	8
297 – 420	25	6
210 – 296	20	4
148 – 209	15	3
105 – 147	15	2

When the spine length of a book block is equal to or less than 105 mm and the block thickness is no more than 6 mm, lock-stitching is recommended.

© ISO 2016 – All rights reserved

4.5.3 Thread sealing

Thread sealing is carried out following the folding process, where thread staples with a thermoplastic coating shall be pushed from the inside to the outside of the sheet prior to the last fold and then the thread ends shall be laid out backwards and fused to the spine of the sheet by pressure and heat. The staples shall align with the binding edge with a tolerance of ±0,5 mm. The staple length should be more than 12 mm, the spacing between the staples should be less than 38 mm.

The thread sealing process shall be followed by the process of gluing-off the spine with a lining stripe. The requirements of 4.5.1.3 apply.

NOTE Thread sealing is considered as an alternative to thread sewing or perfect binding.

4.5.4 Lock-stitching

Lock-stitching (saddle or side) should be used for combining a low number of signatures or sheets with a maximum spine thickness of 6,0 mm. Although thread is used in these methods, the methods are not described as thread sewing. There should be three to four stitches per 10 mm. For side lock-stitching, there should be a space of 4,0 mm ± 1,0 mm between the centre fold and the stitching line.

4.5.5 Saddle-stitching

Saddle-stitching may be applied to the binding of single-layer blocks. The maximum block thickness is related to the staple format. Blocks stitched with flat staples should have a maximum thickness of 8,0 mm. Blocks stitched with Omega staples should have a maximum thickness of 6,0 mm with a loop diameter of 6,0 mm.

The gauge of the wire used for the staples should be dependent upon the block thickness (see Table 3). The distance between each staple (outer staples if there are more than two) and the nearest edge a or c should be equal with a tolerance of 3,0 mm (see Figure 4). The distance between the two staples b should be greater than one third of the height of the product. For the Omega format, the position tolerance should be ±2,0 mm and the Omega staple formation tolerance should be ±1,0 mm.

© ISO 2016 – All rights reserved

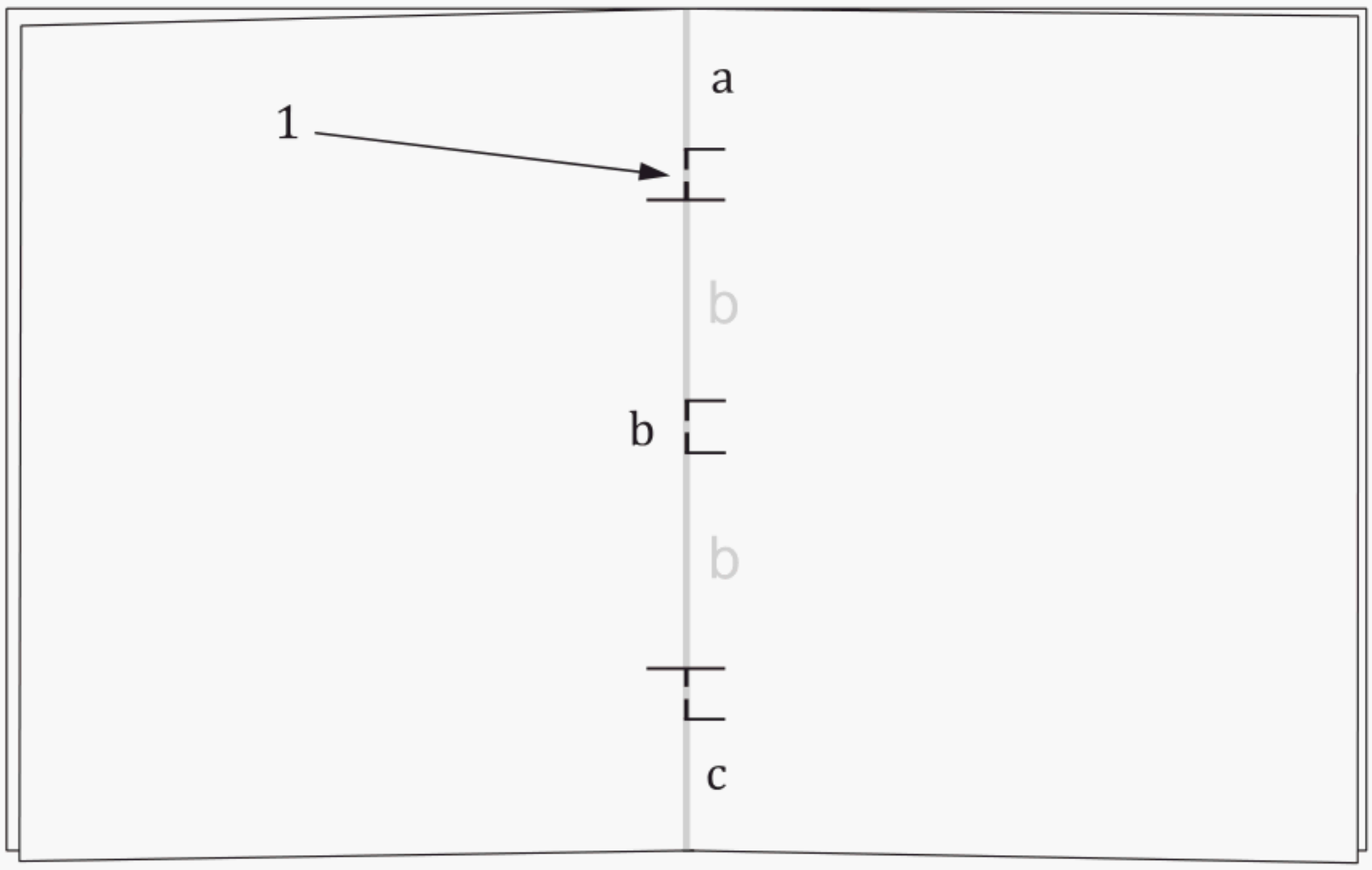

Key

1 staple

Figure 4 — Positioning of staples in saddle-stitched products (showing optional third staple)

Each staple should have its two legs bent over with a maximum space of 3,0 mm between the ends of the wire. The staples shall align with the centre fold with a tolerance of ±0,5 mm. A creasing of the cover is recommended when using thicker cover stock and lamination is recommended to prevent tearing of the cover around the staples.

Table 3 — Minimum wire gauge for staples

Book block thickness mm	Wire gauge BWG	Wire diameter mm
<5	26	0,46
5 – 10	25	0,51
>10	22	0,71

NOTE BWG = Birmingham Wire Gauge, a British wire measurement system that is widely used throughout the world.

4.5.6 Single-sheet binding (spiral, wire-o, comb)

Single-sheet binding includes spiral, wire-o and comb binding. During the binding process, the book block shall be punched or drilled with a series of small holes (square or round) along the binding edge and a metal or plastic coil shall be threaded through the holes in spiral binding; a set of double wire loops shall be inserted into the holes in wire-o binding or a plastic comb shall be inserted into the holes in comb binding, so as to hold the cover and the pages together. The holes in the cover shall be in alignment with that in the pages.

For a reliable binding result, the specifications of the plastic or wire used should correspond to the thickness of the gathered pages and a side clearance should be maintained to ensure easy opening and to avoid tearing of the paper. Recommended parameters are given in Table 4 and Table 5. The loops of

 © ISO 2016 – All rights reserved

the binding shall be fully closed and not distorted through excess pressure in the closing process. The ends of the plastic or wire shall not protrude from the product.

Table 4 — Specification for wire-o binding

Wire gauge mm	Product thickness mm	Loop diameter mm	Pitch mm	Side clearance mm
4,8	3,0	4 × 4	8,47	2,0
6,4	4,0	4 × 4	8,47	2,5
7,9	6,0	4 × 4	8,47	3,0
9,5	7,5	4 × 4	8,47	3,0
11,1	8,5	5 × 4	8,47	3,0
12,7	10,0	5 × 4	8,47	3,0
14,3	12,0	5 × 4	8,47	3,0
15,9	13,5	5 × 5	12,7	3,5
19,0	14,5	5 × 5	12,7	3,5
22,2	17,5	6 × 6	12,7	4,0
25,4	22,0	6 × 6	12,7	4,0
31,8	27,0	6 × 6	12,7	5,0

Table 5 — Specification for spiral binding

Coil gauge mm	Product thickness mm	Coil diameter mm	Pitch mm	Side clearance mm
4,8	3,0	4,7	8,47	2,0
6,4	4,0	6,3	8,47	2,5
7,9	6,0	7,9	8,47	3,0
9,5	7,5	9,5	8,47	3,0
11,1	8,5	11,0	8,47	3,0
12,7	10,0	12,7	8,47	3,0
14,3	12,0	14,3	8,47	3,0
15,9	13,5	16,0	12,7	3,5
19,0	14,5	19,0	12,7	3,5
22,2	17,5	22,2	12,7	4,0
25,4	22,0	25,4	12,7	4,0
31,8	27,0	30,0	12,7	5,0

For comb binding, follow the recommendations of the system provider.

4.6 Trimming

Trimming with a guillotine or a three-knife trimmer shall avoid marks from the pressing bar and the cutting table. Trimming shall be performed after sufficient drying of the glue. After trimming, the book or book block shall have its spine free of wrinkles, and 90° angles in each of the four corners of both the front and back. The trim size and squareness tolerances shall be ±0,5 mm for thicknesses up to 30 mm and ±1,0 mm for thicknesses greater than 30 mm. For measurement, see Figure 2 in 4.2.2.1. The dimensions from front to back should be equal with a tolerance of ±0,5 mm for thicknesses up to 30 mm and ±1,0 mm for thicknesses greater than 30 mm. Brochures with protruding flaps shall be trimmed without damaging the flaps.

© ISO 2016 – All rights reserved

4.7 Case-bound book production

4.7.1 General

Sequence of individual processes may vary according to different manufactural recommendation.

4.7.2 Rounding and backing

Where applicable, book blocks shall be evenly rounded from head to tail and backed to form shoulders on both sides. The height of the shoulders shall be equal to or slightly less than the thickness of the case board. Rounding and backing should be performed on book blocks with a thickness of over 13 mm, or if no rigid spine inlay is used.

NOTE Some product types, such as photo books, are typically produced without rounding and backing.

4.7.3 Inserting a bookmark

If a bookmark is used, the ribbon shall be inserted into the block and glued close to the middle of the spine approximately 20 mm from the head. The length of the ribbon shall be at least 10 mm longer than the diagonal line of the book block. If there is more than one bookmark, they should be positioned evenly throughout the book block.

4.7.4 Back-lining

Fabrics, paper or compounds should be used as back-lining material to reinforce the spine of the block. The back-lining material shall be evenly and firmly attached to the spine. The first lining should extend beyond the book block, while further linings should have the same width as the book block. The height of the lining can be either the same as the book block (application before trimming) or smaller (application after trimming). The lining material should be appropriate for the size and weight of the book block and the intended stiffness of the spine.

4.7.5 Attaching headbands

When headbands are applied, the width shall be equal to the width of the spine with a tolerance of ±0,5 mm. They shall be attached squarely and firmly to the spine and be clearly visible.

4.7.6 Case construction

4.7.6.1 Case boards

Front and rear boards (see Figure 5) shall be cut squarely and smoothly, with the grain direction running parallel to the spine. The height of the boards shall be the height of the book block plus the squares on the head and the tail. The width of the boards shall be the width of the book block plus the square on the fore edge minus the space between the spine inlay and case boards that is left for creating a joint.

The board thickness may be between 1,5 mm and 3,5 mm or even larger, which should be appropriate for the size and weight of the book block. The thickness shall be measured according to ISO 534. Squares on boards should correspond to the size of the book block and the thickness of the board. The correlated variables listed in Table 6 should be applied.

© ISO 2016 – All rights reserved

Table 6 — Book block size, board thickness and squares width

Book block size	Under A5 (B6) mm	A5 (B6) to A4 (B5) mm	Above A4 (B5) mm
Board thickness	≥1,5	≥2,0	≥3,5
Square width	3,0 ± 0,5	3,5 ± 0,5	4,0 ± 0,5

4.7.6.2 Spine inlay

The spine inlay (see Figure 5) shall be cut squarely with the grain direction running parallel to the spine. Its width may be roughly calculated by the spine width plus two thicknesses of the board, but shall be verified using a book block showing all essential properties of the book block to be used later. Its length shall be equal to the height of the case board with a tolerance of −0,5 mm (it shall not be longer than the board). Selection of the material for the spine inlay shall be made in accordance with the shape of the spine (rounded or square). For a square spine, the spine inlay should be the same as the case board, while, for a rounded spine, a suitable cardboard with a lower basis weight can be considered.

4.7.6.3 Covering materials

The height of the covering material shall be equal to the height of the case boards plus the thickness of the boards plus a head and tail overhang. The width of the covering material shall be equal to the width of two boards plus two thicknesses of the board plus two fore edge overhangs plus the width of the spine inlay and the spaces between the inlay and the two boards (see Figure 5).

4.7.6.4 Casemaking

Front and rear boards and the spine inlay shall be firmly fixed to the covering material with glue. The spaces between the spine inlay and the boards shall be uniform and approximately 6,0 mm to 13 mm wide, depending on the thickness of the boards and the intended product properties. The covering material shall be turned in tightly and uniformly, approximately 15 mm to 20 mm wide on all sides, and shall adhere neatly and tightly to the edges of the boards. The corners of the covering material shall be cut at a 45° angle and the distance between board corner and cut edge shall be high enough to completely cover the boards (see Figure 5), so that after turning-in no grey board is visible.

© ISO 2016 – All rights reserved

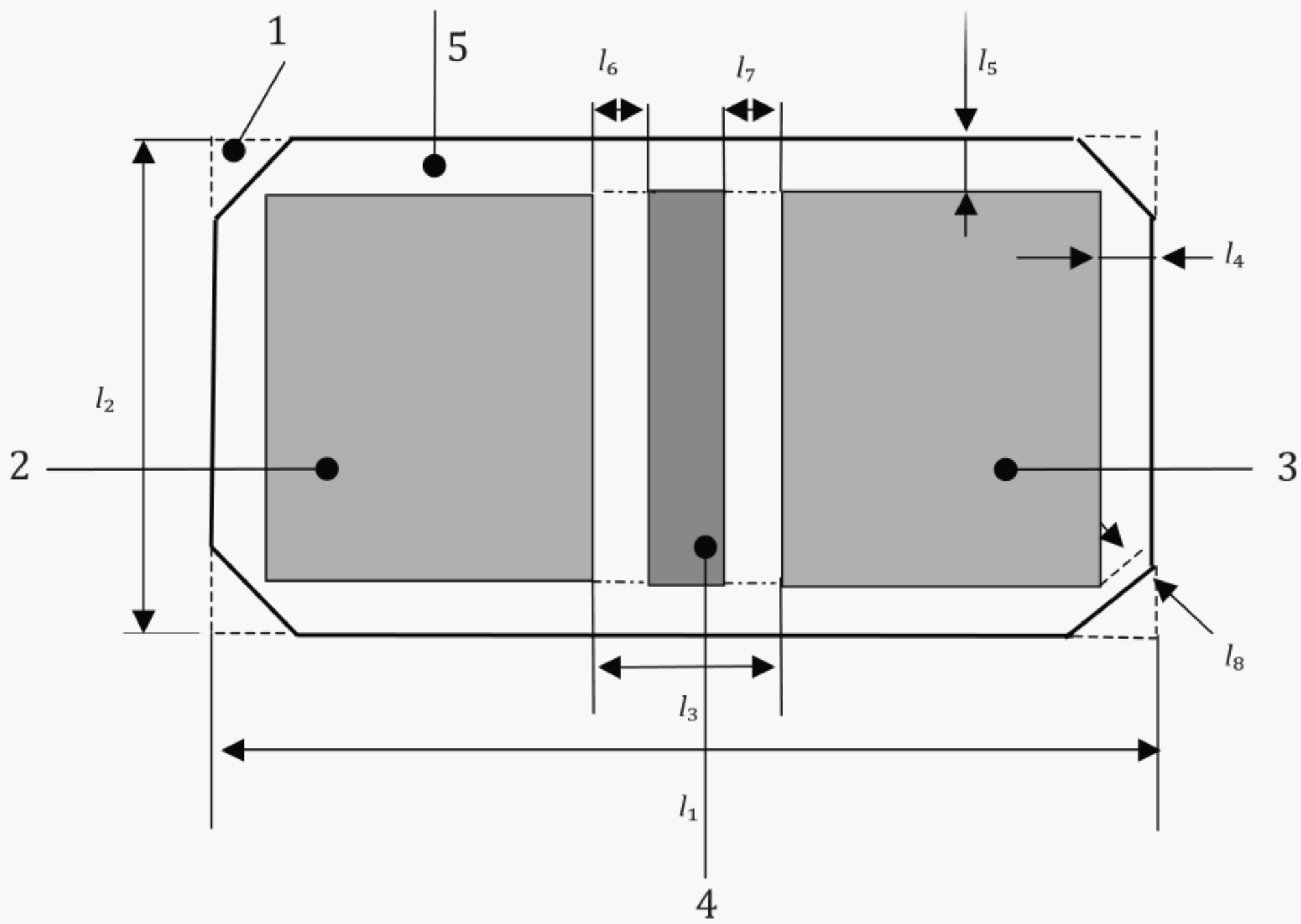

Key

1 cut edge
2 front board
3 rear board
4 spine inlay
5 covering material

l_1 width of covering material
l_2 height of covering material
l_3 space between two boards
l_4 width of turn-in on fore edge
l_5 width of turn-in on head and tail
l_6 space between spine inlay and front board
l_7 space between spine inlay and rear board
l_8 distance between board cover and cut edge

Figure 5 — Case construction

4.7.7 Casing-in

The book block shall be positioned with its spine correctly aligned to the spine inlay of the case. Endpapers shall be pasted down fully and smoothly onto the case boards and be free of wrinkles and bubbles. All squares should be uniform around the perimeter of the book block with a tolerance of ±1,0 mm. The joint shall be formed squarely and securely. See Figure 6.

© ISO 2016 – All rights reserved

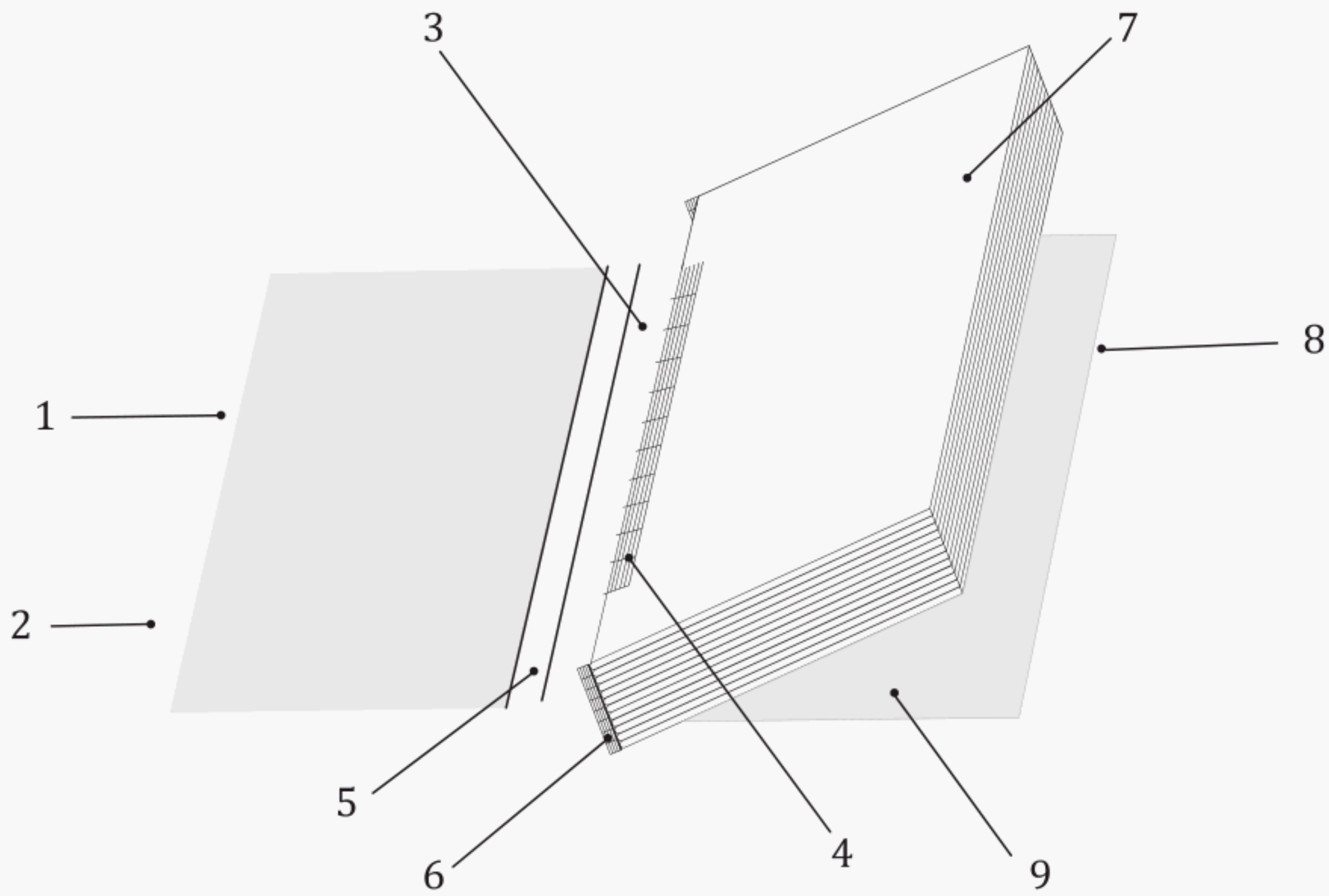

Key

1 covering material
2 case board
3 spine inlay
4 back-lining material
5 joint
6 headband
7 block
8 square
9 endpaper

Figure 6 — Casing-in

4.7.8 Joint forming

The joint of the case should be formed by pressure and heat to achieve a bonding between the joint and the extension of the back-lining material.

4.7.9 Adding a jacket

Where a paper dust jacket is added to a casebound book as a detachable outer cover, its height shall be equal to the height of the case with a tolerance of −1,0 mm. The width of the dust jacket shall be equal to the width of the case plus at least 40 mm for each flap. The jacket shall be wrapped around the book with flaps folded along the fore edge. If a cover band is used, it should be as wide as the paper dust jacket and its height should be at least 50 mm.

4.8 Paper-bound book production

4.8.1 Size of the cover

The cover material shall extend beyond the applied spine glue and be larger in width and height than the block so that after trimming edges are all flush. If the cover includes flaps, the width of the cover

© ISO 2016 – All rights reserved

material shall include the width of the flaps. For many cover applications, a minimum flap width of 30 mm is recommended.

NOTE See also 4.6.

4.8.2 Weight of the cover

The weight of the cover material should be proportional to the size, thickness and weight of the book block; the thicker the book block, the heavier the cover material. The recommended relationship between thickness of the book block and the cover basis weight is given in Table 7.

Table 7 — Thickness of the book block and the basis weight of the cover paper

Book block thickness	Cover basis weight g/m^2
Up to 15 mm	120 – 250
From 15 mm to 30 mm	150 – 320
Above 30 mm	200 – 400

4.8.3 Cover application

To allow a precise wrapping of the cover around the book block, the cover should be prepared by creasing at the position of the spine edges. Additionally, two more creases might be executed to create a hinge on front and rear cover, positioned with a distance of 6,0 mm to 8,0 mm from the spine edge.

The cover shall be attached squarely and firmly to the book block after the application of spine and side glue (perfect binding or gluing-off).

The grain direction of the cover material should be parallel to the spine.

5 Binding quality control

5.1 General

There shall be immediate communication between parties on all irregularities occurring during the manufacturing of bound products. See also 4.1. It is recommended to verify the quality attributes, listed in 5.3, within standardized or customized quality assurance measures, as far as possible.

5.2 Sampling

Sampling should be performed on semi and final products. The sampling of final products should be performed according to either ISO 186 or ISO 2859-1.

5.3 Inspection of the final products

The binding quality of final products shall meet the specifications in the job information requirements. The following aspects shall be used even if not a part of the original job information requirements.

a) The book block shall have form stability and a warping figure that is within tolerance for the standardized climatic conditions of the region of use. For measurement of warping, see Annex A. The warping degree measured should not exceed 2,0 mm per 100 mm of width.

b) No excess of adhesive shall be visible on any part of the final product.

c) All visible surfaces shall have no scratches or marks.

 © ISO 2016 – All rights reserved

d) The adhesion between the cover and the book block shall be strong enough to ensure that the attempt to remove the cover from the book block results in a rupture of the cover material.

e) The adhesion of the spine glue shall be strong enough to ensure that no sheets separate from the book block under conditions of intended use.

f) The content of the book block shall be as intended according to the order of pages and additions.

g) The transition of charts, images, maps and text from page to page should meet accurately for reading; any deviation should not exceed 1,5 mm.

NOTE At this point in the process chain, it is impossible to correct this error. For an evaluation of this issue, semi products (signatures) are necessary.

h) The trimmed edges shall be smooth and without knife marks or turned-over edges.

i) The cover or book case shall be flat and without wrinkles, bubbles or damages.

j) Case-bound books should have firm joints from the head to the tail and uniform squares on all edges. Covering material shall adhere squarely to the case boards and to the inlay.

k) The endpapers should adhere to the case boards and the block without wrinkles and bubbles.

l) Saddle-stitched brochures shall have staples positioned in the folding edge, and there shall be no cracked or misshaped staples.

© ISO 2016 – All rights reserved

Annex A
(normative)

Method to measure degree of warping of finished products

A.1 General

Paper has a certain physical variability and is hydroscopic, any paper based products finished from binding processes shall not be delivered till they have become stable.

To obtain stability, the finished products, after going through all stages of process, shall be stacked in a place at a temperature of 20 °C ± 5 °C and a relative humidity between 35 % and 75 % for 24 h. The measurement of possible warping shall be taken after this handling period of time.

A.2 Measurement

If warping appears, it may cause either of the two following results in a finished product:

— the concave cover;

— the convex cover.

See Figure A.1.

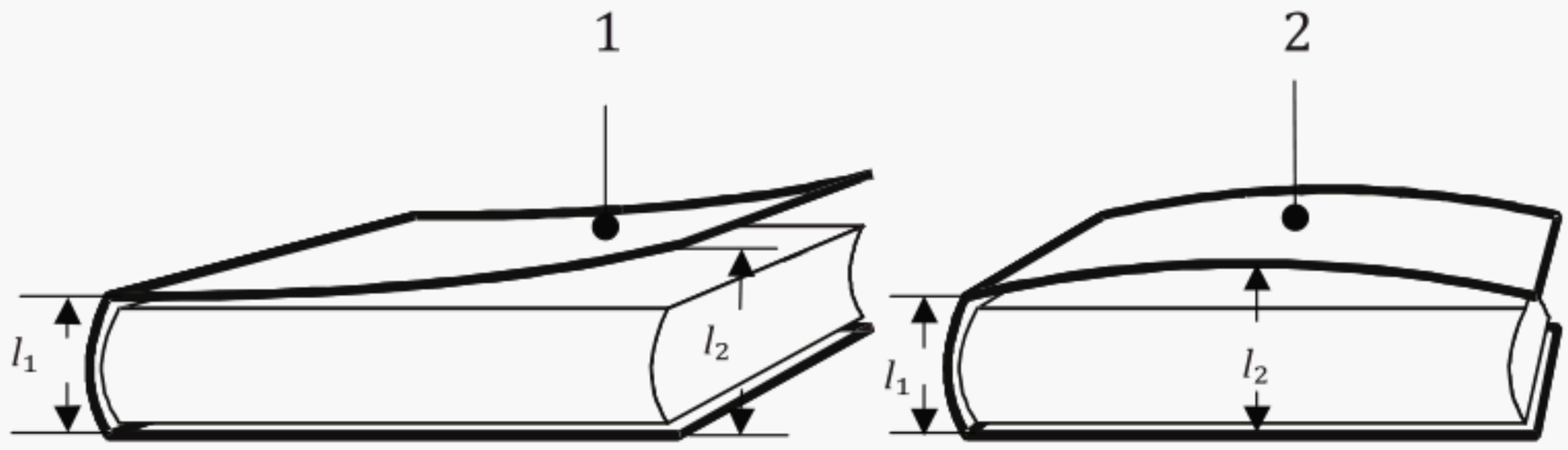

Key

1 concave cover

2 convex cover

l_1 thickness of the spine

l_2 length from the highest point of the concave or convex cover to the bottom

Figure A.1 — Warping of a final product

To determine the degree of warping in both ways, the first step is to measure the thickness of the spine (l_1), then measure the length from the highest point of the concave or convex cover to the bottom (l_2), see Figure A.1. The difference between these two measured values ($l_2 - l_1$) is the warping degree.

© ISO 2016 – All rights reserved

Bibliography

[1] ISO 186, *Paper and board — Sampling to determine average quality*

[3] ISO 2859-1, *Sampling procedures for inspection by attributes — Part 1: Sampling schemes indexed by acceptance quality limit (AQL) for lot-by-lot inspection*

[2] ISO 9706, *Information and documentation — Paper for documents — Requirements for permanence*

[4] ISO 11800, *Information and documentation — Requirements for binding materials and methods used in the manufacture of books*

[5] ISO 14416, *Information and documentation — Requirements for binding of books, periodicals, serials and other paper documents for archive and library use — Methods and materials*

[6] ISO 12637-4, *Graphic technology — Vocabulary — Part 4: Postpress terms*

[7] ANS/NISO/LBI Z39.78-2000, *Library Binding*

[8] ABNT NBR 14869:2002, *Graphic Technology — Textbooks — Specifications*

[9] ABNT NBR 15201-2006, *Printing technology — Textbooks — Classification of defects and testing methods*

[10] TAGA Italia — TAGA.DOC.10 — *Linee Guida e raccomandazinoni per le lavorazioni di legatoria*

[11] Chinese Press and Publication Industry Standard, CY/T27-1999, *Quality requirements and inspection procedures for hard cover binding*

[12] *VISCOM Richtlinien Verarbeitungsdifferenzen und Toleranzwerte in der Druckweiterverarbeitung*

[13] Kipphan H. *Handbook of print media*. Springer, 2001

© ISO 2016 – All rights reserved

ICS 37.100.01

Price based on 21 pages

© ISO 2016 – All rights reserved

This page deliberately left blank

NO COPYING WITHOUT BSI PERMISSION EXCEPT AS PERMITTED BY COPYRIGHT LAW

British Standards Institution (BSI)

BSI is the national body responsible for preparing British Standards and other standards-related publications, information and services.

BSI is incorporated by Royal Charter. British Standards and other standardization products are published by BSI Standards Limited.

About us

We bring together business, industry, government, consumers, innovators and others to shape their combined experience and expertise into standards -based solutions.

The knowledge embodied in our standards has been carefully assembled in a dependable format and refined through our open consultation process. Organizations of all sizes and across all sectors choose standards to help them achieve their goals.

Information on standards

We can provide you with the knowledge that your organization needs to succeed. Find out more about British Standards by visiting our website at bsigroup.com/standards or contacting our Customer Services team or Knowledge Centre.

Buying standards

You can buy and download PDF versions of BSI publications, including British and adopted European and international standards, through our website at bsigroup.com/shop, where hard copies can also be purchased.

If you need international and foreign standards from other Standards Development Organizations, hard copies can be ordered from our Customer Services team.

Subscriptions

Our range of subscription services are designed to make using standards easier for you. For further information on our subscription products go to bsigroup.com/subscriptions.

With **British Standards Online (BSOL)** you'll have instant access to over 55,000 British and adopted European and international standards from your desktop. It's available 24/7 and is refreshed daily so you'll always be up to date.

You can keep in touch with standards developments and receive substantial discounts on the purchase price of standards, both in single copy and subscription format, by becoming a **BSI Subscribing Member**.

PLUS is an updating service exclusive to BSI Subscribing Members. You will automatically receive the latest hard copy of your standards when they're revised or replaced.

To find out more about becoming a BSI Subscribing Member and the benefits of membership, please visit bsigroup.com/shop.

With a **Multi-User Network Licence (MUNL)** you are able to host standards publications on your intranet. Licences can cover as few or as many users as you wish. With updates supplied as soon as they're available, you can be sure your documentation is current. For further information, email bsmusales@bsigroup.com.

Revisions

Our British Standards and other publications are updated by amendment or revision.

We continually improve the quality of our products and services to benefit your business. If you find an inaccuracy or ambiguity within a British Standard or other BSI publication please inform the Knowledge Centre.

Copyright

All the data, software and documentation set out in all British Standards and other BSI publications are the property of and copyrighted by BSI, or some person or entity that owns copyright in the information used (such as the international standardization bodies) and has formally licensed such information to BSI for commercial publication and use. Except as permitted under the Copyright, Designs and Patents Act 1988 no extract may be reproduced, stored in a retrieval system or transmitted in any form or by any means – electronic, photocopying, recording or otherwise – without prior written permission from BSI. Details and advice can be obtained from the Copyright & Licensing Department.

Useful Contacts:

Customer Services
Tel: +44 845 086 9001
Email (orders): orders@bsigroup.com
Email (enquiries): cservices@bsigroup.com

Subscriptions
Tel: +44 845 086 9001
Email: subscriptions@bsigroup.com

Knowledge Centre
Tel: +44 20 8996 7004
Email: knowledgecentre@bsigroup.com

Copyright & Licensing
Tel: +44 20 8996 7070
Email: copyright@bsigroup.com

BSI Group Headquarters

389 Chiswick High Road London W4 4AL UK

bsi.