BS ISO 18325:2015

BSI Standards Publication

Geosynthetics — Test method for the determination of water discharge capacity for prefabricated vertical drains

bsi.

...making excellence a habit.™

National foreword

This British Standard is the UK implementation of ISO 18325:2015.

The UK participation in its preparation was entrusted to Technical Committee B/553, Geosynthetics.

A list of organizations represented on this committee can be obtained on request to its secretary.

This publication does not purport to include all the necessary provisions of a contract. Users are responsible for its correct application.

© The British Standards Institution 2015.
Published by BSI Standards Limited 2015

ISBN 978 0 580 80710 7

ICS 59.080.70

Compliance with a British Standard cannot confer immunity from legal obligations.

This British Standard was published under the authority of the Standards Policy and Strategy Committee on 30 November 2015.

Amendments/corrigenda issued since publication

Date	Text affected

INTERNATIONAL STANDARD

ISO 18325

First edition
2015-11-15

Geosynthetics — Test method for the determination of water discharge capacity for prefabricated vertical drains

Géosynthétiques — Méthode d'essai pour la détermination de la capacité de décharge d'eau des drains verticaux préfabriqués

Reference number
ISO 18325:2015(E)

© ISO 2015

COPYRIGHT PROTECTED DOCUMENT

© ISO 2015, Published in Switzerland

All rights reserved. Unless otherwise specified, no part of this publication may be reproduced or utilized otherwise in any form or by any means, electronic or mechanical, including photocopying, or posting on the internet or an intranet, without prior written permission. Permission can be requested from either ISO at the address below or ISO's member body in the country of the requester.

ISO copyright office
Ch. de Blandonnet 8 • CP 401
CH-1214 Vernier, Geneva, Switzerland
Tel. +41 22 749 01 11
Fax +41 22 749 09 47
copyright@iso.org
www.iso.org

Contents

Page

Foreword ..... **iv**
Introduction ..... **v**
1 Scope **1**
2 Normative references **1**
3 Terms and definitions **1**
4 Principle **2**
5 Apparatus and materials **2**
6 Test specimens **5**
6.1 Handling 5
6.2 Selection 5
6.3 Number and dimensions 5
6.4 Specimen condition 5
7 Test procedure **5**
8 Calculations and expressions of results **7**
9 Test report **7**
Annex A (informative) **Determination of the correction factor R_T for conversion to a water temperature of 20 °C** **8**
Bibliography **10**

© ISO 2015 – All rights reserved

Foreword

ISO (the International Organization for Standardization) is a worldwide federation of national standards bodies (ISO member bodies). The work of preparing International Standards is normally carried out through ISO technical committees. Each member body interested in a subject for which a technical committee has been established has the right to be represented on that committee. International organizations, governmental and non-governmental, in liaison with ISO, also take part in the work. ISO collaborates closely with the International Electrotechnical Commission (IEC) on all matters of electrotechnical standardization.

The procedures used to develop this document and those intended for its further maintenance are described in the ISO/IEC Directives, Part 1. In particular the different approval criteria needed for the different types of ISO documents should be noted. This document was drafted in accordance with the editorial rules of the ISO/IEC Directives, Part 2 (see www.iso.org/directives).

Attention is drawn to the possibility that some of the elements of this document may be the subject of patent rights. ISO shall not be held responsible for identifying any or all such patent rights. Details of any patent rights identified during the development of the document will be in the Introduction and/or on the ISO list of patent declarations received (see www.iso.org/patents).

Any trade name used in this document is information given for the convenience of users and does not constitute an endorsement.

For an explanation on the meaning of ISO specific terms and expressions related to conformity assessment, as well as information about ISO's adherence to the WTO principles in the Technical Barriers to Trade (TBT) see the following URL: Foreword - Supplementary information

The committee responsible for this document is ISO/TC 221, *Geosynthetics*.

© ISO 2015 – All rights reserved

Introduction

Prefabricated vertical drains (PVDs) are used to accelerate the settlement of soils under a given surcharge loading. Discharge capacity is, therefore, one of the most important properties for PVDs. The discharge capacity decreases gradually due to alteration in shape of core materials under soil pressure and deformation of the geotextile filter into the core structure as time passes.

In highly compressible soils (e.g. peat and gyttja) the relative compression that takes place during the consolidation process, may cause more or less significant buckling of the drains.

In less compressible soils (settlements lower than 20 %), the buckled test is not relevant.

© ISO 2015 – All rights reserved

INTERNATIONAL STANDARD ISO 18325:2015(E)

Geosynthetics — Test method for the determination of water discharge capacity for prefabricated vertical drains

1 Scope

This International Standard specifies a test method for determining the water discharge capacity of prefabricated vertical drains (PVDs), which can be used for conformance and acceptance testing.

This is an index test.

2 Normative references

The following documents, in whole or in part, are normatively referenced in this document and are indispensable for its application. For dated references, only the edition cited applies. For undated references, the latest edition of the referenced document (including any amendments) applies.

ISO 5813, *Water quality — Determination of dissolved oxygen — Iodometric method*

ISO 9862, *Geosynthetics — Sampling and preparation of test specimens*

EN 15237, *Execution of special geotechnical works — Vertical drainage*

3 Terms and definitions

For the purposes of this document, the following terms and definitions apply.

3.1
prefabricated vertical drain
PVD
drainage composite with a rectangular cross-section, with a width of typically 100 mm installed vertically into soil to provide drainage for accelerated consolidation of soils usually consisting of a central core with a channel system surrounded by a filter sleeve or with a filter adhered to it

Note 1 to entry: Other wordings like wick drain, band drain, strip drain are also used.

3.2
confined length
length of the part of the specimen exposed to pressure

3.3
filter length
length of the filter around or on the specimen

3.4
index discharge capacity of a PVD
q_w
volume of water which flows out of the PVD per unit time under a specified hydraulic gradient

Note 1 to entry: It is expressed in ml/s.

© ISO 2015 – All rights reserved

3.5
hydraulic gradient
i
ratio of the total head loss across the specimen to the filter length in the flow direction

Note 1 to entry: The filter length would be shorter than the core length and longer than the confined length.

4 Principle

The factors affecting the discharge capacity of PVDs measured according to this International Standard are limited to the intrusion of the filter into the core linked to the filter stiffness, the drainage core stiffness, creep and geometry of the core to some extent and creep of the geotextile filter to some extent, confining pressure, and hydraulic gradient.

PVD is enveloped by a flexible rubber membrane to simulate the deformation of the geotextile filter into the core structure and the discharge capacity is determined in straight and buckled conditions.

5 Apparatus and materials

5.1 Discharge capacity apparatus

5.1.1 The discharge capacity apparatus satisfies the following requirements.

a) The apparatus shall be capable of maintaining a constant head loss at different water levels, at least those corresponding to hydraulic gradients of 0,1 and 1,0, simulating the pressure arising from the earth mass when PVDs are mounted vertically within the ground to serve as discharging interstitial water, and testing PVDs in straight and buckled conditions.

b) The apparatus is mainly comprised of a pressure cell, a water supply portion (see Figure 1) and buckling device (see Figure 2). The buckling device is used to simulate the deformation of PVDs due to the relative compression in highly compressible soils. The pressure cell shall be capable of inserting the buckling device and maintain mounted specimens in straight and buckled conditions.

c) The distance between the two slots used to insert the specimen in the cell shall be (300 ± 10) mm.

5.1.2 A system allowing to adjust the head loss up to 500 mm shall be used.

5.1.3 The buckling device satisfies the following requirements.

a) The device is capable of buckling the specimen and maintaining the shape of the buckled specimen. It is mainly comprised of supporters, guide frames, central and fixing pins and pushing rod (see Figure 2).

b) The guide frame shall be fixed and supported inside the pressure cell.

c) The guide frames shall consist of two holes and one slit to tie fixing pins and move the central pin. The distance between two holes shall be (60 ± 0,1) mm and the length of slit should be greater than 60 mm in order to set up 60 mm and 55 mm of A and B respectively.

d) The diameters of fixing pins and central pin shall be (5 ± 0,5) mm.

NOTE Other pin diameters can be selected with the agreement of all concerned persons or parties, provided that the pin diameter used is given in the test report.

© ISO 2015 – All rights reserved

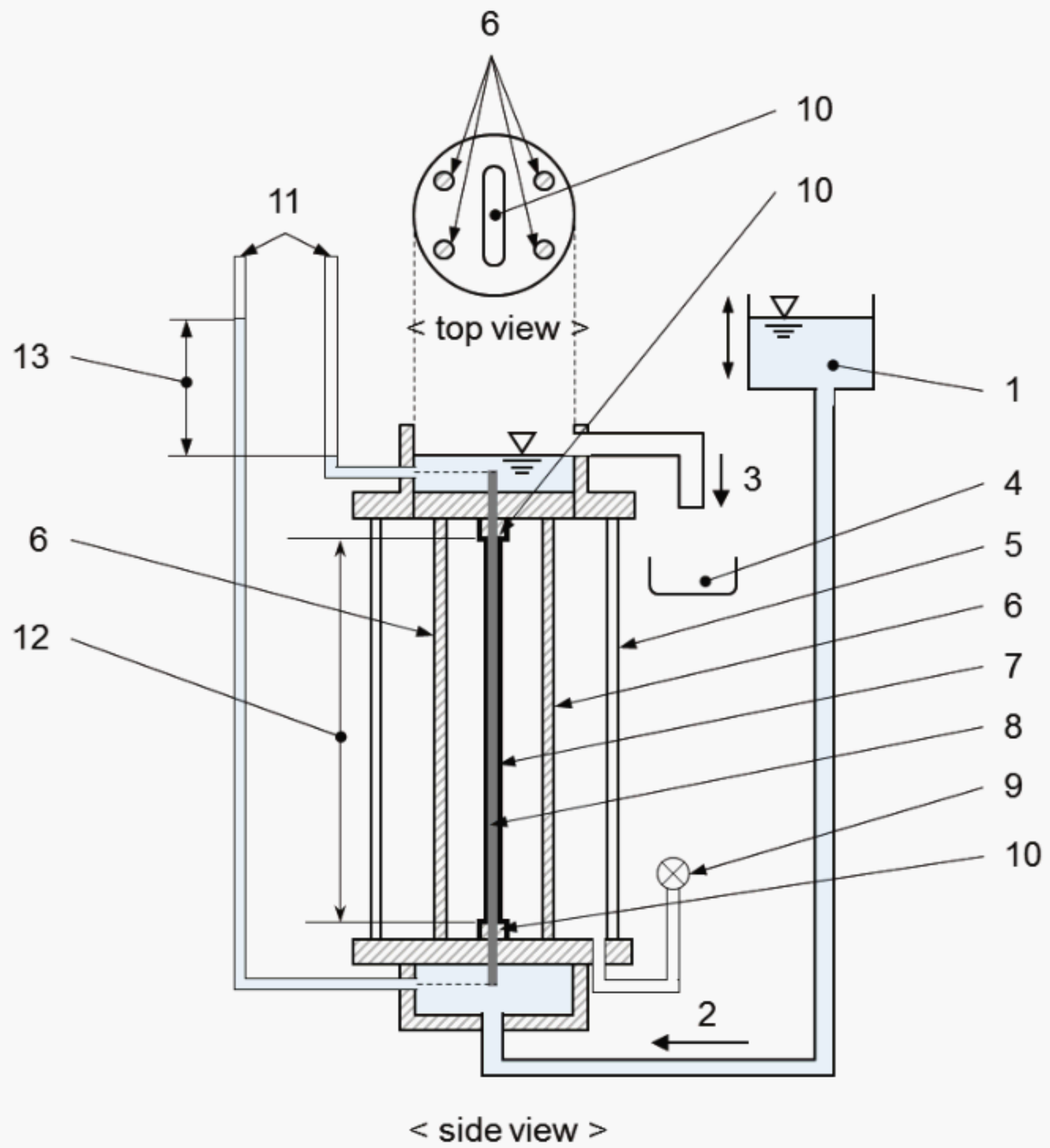

Key

1 water reservoir
2 water inlet
3 water outlet
4 equipment for determining the amount of water
5 pressure cell
6 supporters
7 flexible membrane
8 specimen (PVD)
9 pressure controller
10 slots
11 manometers
12 confined length, (300 ± 10) mm
13 head loss (Δh)

Figure 1 — Example of discharge capacity apparatus

© ISO 2015 – All rights reserved

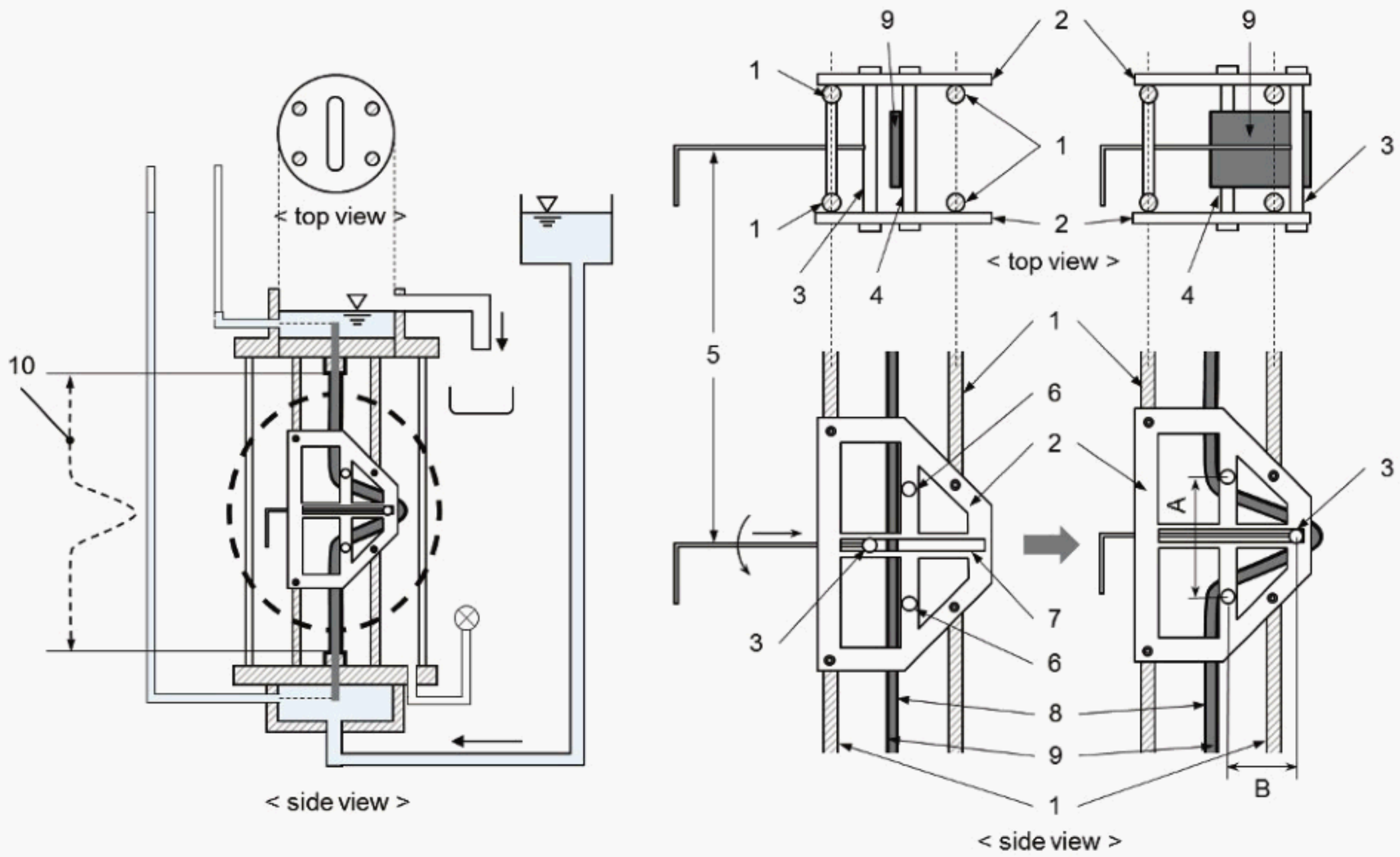

Key

1	supporters	7	slit
2	guide frames	8	flexible membrane
3	central pin	9	specimen (PVD)
4	fixing pins	10	confined length
5	pushing rod	A	60 mm
6	holes	B	55 mm

Figure 2 — Example of buckling device

5.2 Flexible membrane

A cylinder- or oval shaped membrane with a thickness less than 0,7 mm made of synthetic rubber shall be used.

The membrane shall be sufficiently flexible to not limit geotextile deformation and intrusion into the drain channels.

5.3 Water

The water shall be at a temperature between 18 °C and 22 °C and the water temperature should preferably be at or above the ambient temperature of the test laboratory. The oxygen content shall not exceed 10 mg/kg, when measured at the point where the water enters the apparatus. The water shall be filtered if suspended solids are visible to the naked eye or if solids accumulate on or in the specimen thus reducing the flow with time.

© ISO 2015 – All rights reserved

As the temperature correction (see Annex A) relates only to laminar flow, it is advisable to work at temperatures as close as possible to 20 °C to minimize inaccuracies associated with inappropriate correction factors, should the flow be non-laminar.

NOTE The biological activity in the water is the one of facts for air bubbles, which will affect the index discharge capacity in a negative way. Some biocides have been shown to reduce the biological activity. Demineralized water of grade 2 according to ISO 3696 can also be used to prevent this risk of biological activity.

5.4 Pressure controller

The pressure controller shall be provided for controlling the pressure of (10 ~ 300) kPa applied to the mounted specimen to an accuracy of ± 5 %. It shall be capable of maintaining the proposed pressure on the PVDs without any deformation which would influence the test results.

5.5 Equipment for determining the amount of water

When the amount of water is determined by measurements of volume, a measuring vessel for determining the volume to an accuracy of 1 % is required. When the volume is determined by weighing, it shall be determined to an accuracy of 1 %.

5.6 Dissolved-oxygen meter, or apparatus in accordance with ISO 5813.

5.7 Stopwatch, for measuring time to an accuracy of 0,1 s.

5.8 Thermometer, to determine the water temperature used for the flow measurements to an accuracy of 0,2 °C.

6 Test specimens

6.1 Handling

The sample shall not be folded and shall be handled as infrequently as possible to avoid disturbance to its structure. The sample shall be kept in a flat position without any load.

6.2 Selection

Take specimens from the sample in accordance with ISO 9862.

6.3 Number and dimensions

Cut three test specimens from the sample with the length parallel to the machine direction. The full width of the product shall be tested.

6.4 Specimen condition

The specimens shall be clean, free from surface deposits and without visible damage or folding marks.

7 Test procedure

7.1 Cut the test specimens from the sample exposed to a temperature of (20 ± 2) °C for 24 h. The specimens shall be longer than the confined length. The geotextile portion that is unexposed to the pressure should be cut to ensure smooth entry and exit of water flow through the specimen.

© ISO 2015 – All rights reserved

7.2 Place the specimens under water containing a wetting agent at laboratory temperature, gently stir to remove air bubbles and leave to saturate for at least 12 h. Use an aryl alkyl sodium sulfonate at a concentration of 0,1 % by volume as the wetting agent.

7.3 For specimen installation in straight condition, use the procedure described in 7.3.1 and 7.3.2.

7.3.1 Wrap the specimen with flexible membrane except top and bottom parts. Place the specimen in the pressure cell and insert it into the slots. The specimen shall be mounted in a straight line.

7.3.2 Cover the top and bottom parts of specimen with flexible membrane so as to ensure no wrinkles are formed. See that the membrane wrapped to the specimen is watertight without leakage. The confined length of the PVD exposed to pressure shall be (300 ± 10) mm for tests in straight condition.

7.4 For specimen installation in buckled condition, use the procedure described in 7.4.1 to 7.4.4.

7.4.1 Fix the guide frames to the supporters in the pressure cell. Insert two fixing pins into the holes and tie them to a value of A of (60 ± 1) mm in guide frames. Insert the central pin into the slit and place to the left end.

7.4.2 Wrap the specimen with flexible membrane except top and bottom parts. Place the specimen behind the fixing pins and in front of the central pin of guide frames in the pressure cell and insert it into the slots (see Figure 2). Move the centre of specimen at a constant speed of (120 ± 10) mm/min using the central pin until B becomes 55 mm (using the pushing rod with rotating handle). Insert the central pin in the guide frame.

7.4.3 Cover the top and bottom parts of specimen with flexible membrane so as to ensure no wrinkles are formed. Check that the membrane wrapped to the specimen is watertight without leakage.

7.4.4 Measure the confined length of the buckled specimen using a metal ruler.

7.5 Put a pressure on the cell of 50 kPa and check if the cell and the flexible membrane are watertight.

7.6 Allow water to flow through the specimen in order to remove air at a hydraulic gradient smaller than 1,0 before each measurement of the amount of water.

7.7 When pressurized, a sudden increase in pressure may cause damage to the surface of the flexible membrane. Therefore, pressure shall preferably be increased by 50 kPa up to the specified pressure in 2 min. The applied pressures are 200 kPa for straight condition and 120 kPa for buckled condition to be consistent with EN 15237. The variation of pressure during the desired measurement period shall be less than 5 %.

NOTE Other pressure levels can be applied with the agreement of all concerned persons or parties. In this case the pressure levels applied are to be described in the test report.

7.8 Fill the water reservoir to the level corresponding to the hydraulic gradient of 0,1 and then allow water to flow through the specimen.

7.9 Collect the amount of water passing through the mounted specimen and record the volume of water collected and the water temperature. The volume of the collected water is measured for hydraulic gradients of 0,1 and 1 in the pressure loading periods of 360 s, 1 h, 24 h and 7 days. The measurement shall be started within 5 min after adjusting the hydraulic gradient and the flow is stabilized.

A minimum of three measurements at each loading period shall be carried out.

© ISO 2015 – All rights reserved

The volume of water collected should be at least 1,0 l and, for materials with very high flow rates, the collection time shall be at least 10 s.

It is strongly recommended that the system be kept submerged during waiting time between measurements with a small water flow through the system to prevent the system from drying out.

8 Calculations and expressions of results

The index discharge capacity of a PVD at 20 °C is calculated as:

$$q_w = \frac{V \cdot R_T}{t}$$

where

q_w is the index discharge capacity at a specified hydraulic gradient (ml/s);

V is the volume of water (ml);

t is a measuring time (s);

R_T is the correction factor to a water temperature of 20 °C (see Annex A).

9 Test report

The test report shall include the following information:

a) the number and year of publication of this International Standard, i.e. ISO 18325:2015;

b) the test laboratory and, if required, the test operator;

c) details of the test equipment including pin diameter;

d) a statement as to whether straight line or buckled line condition was used;

e) the confined length of specimen exposed to the pressure;

f) the individual and mean index discharge capacity values for each pressure;

g) the hydraulic gradients tested;

h) the applied pressure;

i) the duration of test time;

j) the water temperature range;

k) the water type (stilled, de-aerated, de-ionized, filtered) and dissolved oxygen values;

l) any deviation from this International Standard;

m) any anomaly in the hydraulic behaviour of the product.

© ISO 2015 – All rights reserved

Annex A
(informative)

Determination of the correction factor R_T for conversion to a water temperature of 20 °C

$$R_T = \frac{\eta_T}{\eta_{20}} = \frac{1,762}{1 + 0,033\,7T + 0,000\,22T^2} \qquad \text{(dimensionless)}$$

where

η_T is the dynamic viscosity at T °C (mPa·s), given by:

$$\eta_T = \frac{1,78}{1 + 0,033\,7T + 0,000\,22T^2}$$

T is the water temperature (°C);

η_{20} is the dynamic viscosity at 20 °C (mPa·s);

R_T is the correction factor for converting to a water temperature of 20 °C.

© ISO 2015 – All rights reserved

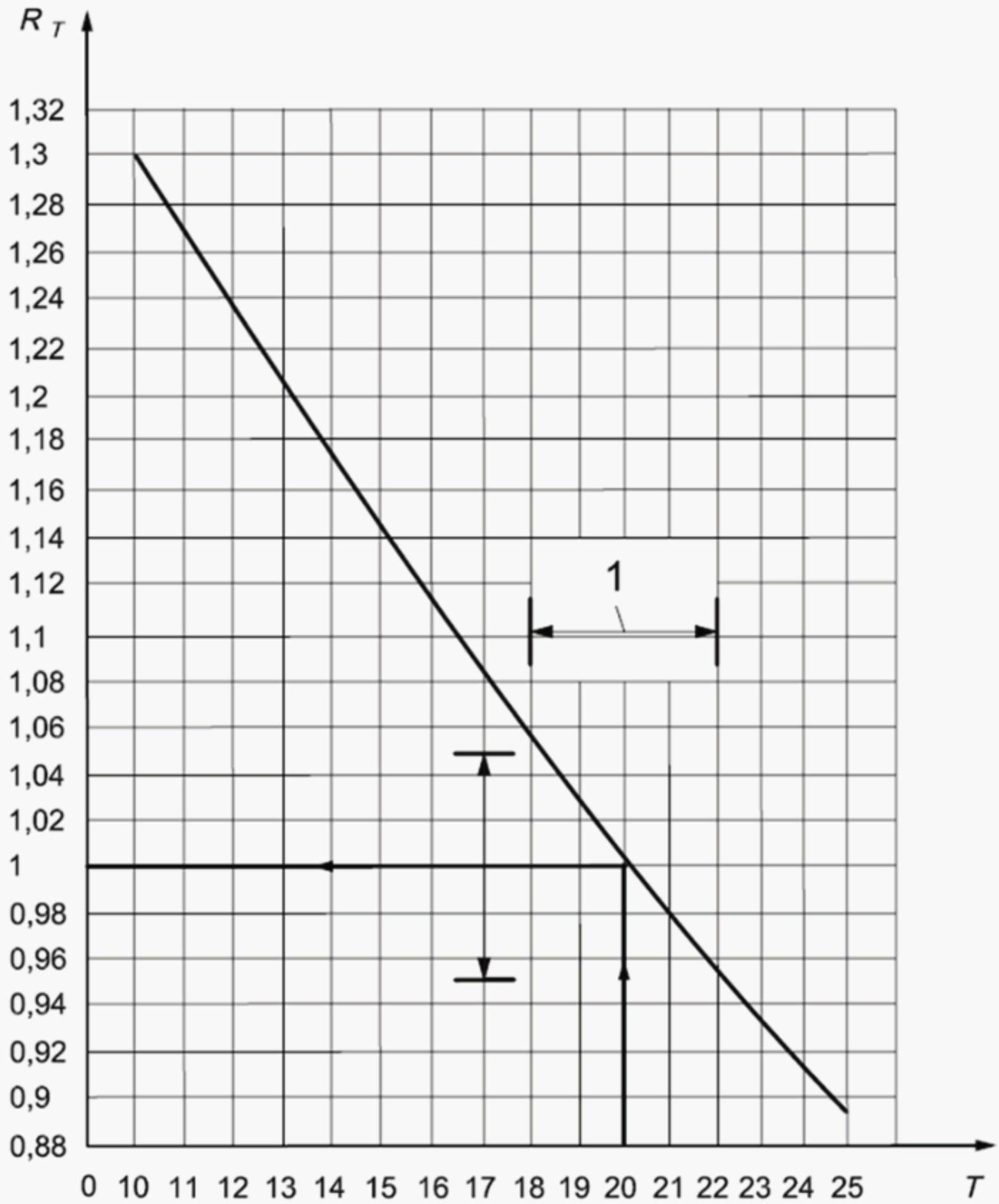

Key

T test temperature (°C)

R_T correction factor

1 temperature range 18 °C to 22 °C (see Note in 5.3)

Figure A.1 — Graphical presentation of the correction factor R_T

© ISO 2015 – All rights reserved

Bibliography

[1] ISO 3696, *Water for analytical laboratory use — Specification and test methods*

[2] ISO 12958, *Geotextiles and geotextile-related products — Determination of water flow capacity in their plane*

[3] ASTM D 6918, *Standard test method for testing vertical strip drains in the crimped condition*

[4] KS K 0940, *Test method for discharge capacity of plastic drain board*

[5] RS-FITI-2014-021, *Prefabricated vertical drain board for soft ground improvement*

© ISO 2015 – All rights reserved

ICS 59.080.70

Price based on 10 pages

© ISO 2015 – All rights reserved