BS ISO 1853:2011

BSI Standards Publication

Conducting and dissipative rubbers, vulcanized or thermoplastic — Measurement of resistivity

bsi.

...making excellence a habit.™

National foreword

This British Standard is the UK implementation of ISO 1853:2011.

The UK participation in its preparation was entrusted to Technical Committee PRI/22, Physical testing of rubber.

A list of organizations represented on this committee can be obtained on request to its secretary.

This publication does not purport to include all the necessary provisions of a contract. Users are responsible for its correct application.

© BSI 2011

ISBN 978 0 580 66332 1

ICS 83.060

Compliance with a British Standard cannot confer immunity from legal obligations.

This British Standard was published under the authority of the Standards Policy and Strategy Committee on 30 September 2011.

Amendments issued since publication

Date	Text affected

INTERNATIONAL STANDARD

ISO 1853

Third edition
2011-08-01

Conducting and dissipative rubbers, vulcanized or thermoplastic — Measurement of resistivity

Caoutchoucs vulcanisés ou thermoplastiques conducteurs et dissipants — Mesurage de la résistivité

Reference number
ISO 1853:2011(E)

© ISO 2011

COPYRIGHT PROTECTED DOCUMENT

© ISO 2011

All rights reserved. Unless otherwise specified, no part of this publication may be reproduced or utilized in any form or by any means, electronic or mechanical, including photocopying and microfilm, without permission in writing from either ISO at the address below or ISO's member body in the country of the requester.

ISO copyright office
Case postale 56 • CH-1211 Geneva 20
Tel. + 41 22 749 01 11
Fax + 41 22 749 09 47
E-mail copyright@iso.org
Web www.iso.org

Published in Switzerland

Contents

Page

Foreword ..... **iv**

Introduction ..... **v**

1 Scope **1**

2 Normative reference **1**

3 Method 1 ..... **1**
3.1 Apparatus and materials **1**
3.2 Test piece **2**
3.3 Number of test pieces **3**
3.4 Procedure **3**
3.5 Expression of results **4**
3.6 Test report **4**

4 Method 2 ..... **4**
4.1 Apparatus and materials **4**
4.2 Test piece **5**
4.3 Number of test pieces **5**
4.4 Procedure **5**
4.5 Expression of results **6**
4.6 Test report **6**

5 Method 3 ..... **7**
5.1 Apparatus and materials **7**
5.2 Test piece **7**
5.3 Number of test pieces **8**
5.4 Procedure **8**
5.5 Expression of results **8**
5.6 Test report **8**

Annex A (informative) **Solid-state electrometer** **10**

© ISO 2011 – All rights reserved

Foreword

ISO (the International Organization for Standardization) is a worldwide federation of national standards bodies (ISO member bodies). The work of preparing International Standards is normally carried out through ISO technical committees. Each member body interested in a subject for which a technical committee has been established has the right to be represented on that committee. International organizations, governmental and non-governmental, in liaison with ISO, also take part in the work. ISO collaborates closely with the International Electrotechnical Commission (IEC) on all matters of electrotechnical standardization.

International Standards are drafted in accordance with the rules given in the ISO/IEC Directives, Part 2.

The main task of technical committees is to prepare International Standards. Draft International Standards adopted by the technical committees are circulated to the member bodies for voting. Publication as an International Standard requires approval by at least 75 % of the member bodies casting a vote.

Attention is drawn to the possibility that some of the elements of this document may be the subject of patent rights. ISO shall not be held responsible for identifying any or all such patent rights.

ISO 1853 was prepared by Technical Committee ISO/TC 45, *Rubber and rubber products*, Subcommittee SC 2, *Testing and analysis*.

This third edition cancels and replaces the second edition (ISO 1853:1998), which has been technically revised, mainly to add another two methods (methods 2 and 3).

© ISO 2011 – All rights reserved

Introduction

Rubber is normally regarded as a material of high electrical resistivity; consequently, it is widely used as an insulator. However, the incorporation of various materials, in particular certain forms of carbon black, greatly reduces the electrical resistance so that volume resistivities between 10^{13} Ω·m and 0,01 Ω·m are obtainable.

There are various technical and industrial purposes for which rubber with a reduced resistivity is a useful material, the most frequent application being for the dissipation of static charges. In certain circumstances, a lower limit of resistance has to be imposed on a product with this latter application, as a safety precaution to prevent its ignition or to prevent severe shock to a person in contact with it, in the event of faulty insulation or nearby electrical equipment.

Products which, while conducting away static charges, are sufficiently insulating to fulfill the safety requirements above are termed dissipative rubbers (the description antistatic rubber is also used). Products which do not fulfill the safety requirements are termed “conducting” rubbers. Since the dimensions of the product are involved, it is not possible to define a suitable range of volume resistivity for either of these classes, but only a range of resistance values between defined points. However, conductive materials are generally considered to have a resistivity below 10^6 Ω·m and dissipative materials to have a resistivity between 10^5 Ω·m and 10^{10} Ω·m.

The principal hazard, apart from static electricity, in most buildings and with most electrical equipment is from leakage currents from normal voltage supply mains. To guard against these hazards, it is recommended that the lower limit of resistance for a dissipative rubber product be 5×10^4 Ω for 250 V mains supplies, that is a maximum current of 5 mA. The limit can be proportionally less for lower voltages.

The maximum resistance which will permit the dissipation of static charges depends on the rate of generation of charge required to produce the minimum voltage which can be regarded as a hazard in a particular application.

Effect of temperature changes and strain on conducting and dissipative rubbers

The resistance of rubber and plastics made conductive by the addition of carbon black is very sensitive to strain and temperature history, since resistance depends on the structural configuration of the carbon particles in the matrix.

Under normal conditions of service with varying temperature and strain history, the resistance of a sample of a given material can vary considerably, for example by a hundred or more times, between freshly strained materials at room temperatures and material which has remained unstrained for a short period at 100 °C.

In order that valid comparisons can be made on test pieces, a conditioning treatment is specified so that the measurements are made on test pieces brought close to a condition of zero strain.

Electrode systems

Certain types of electrode, when applied to these rubbers, have a contact resistance which can be many thousands of times greater than the intrinsic resistance of the test piece. Dry contacts under light pressure or point contacts are particularly poor.

The definition of a suitable electrode system is therefore an important part of this International Standard and, in order to satisfy the various practical requirements for tests on laboratory-prepared test pieces, several electrode systems have been selected and are described in Clauses 3, 4 and 5.

© ISO 2011 – All rights reserved

INTERNATIONAL STANDARD **ISO 1853:2011(E)**

Conducting and dissipative rubbers, vulcanized or thermoplastic — Measurement of resistivity

WARNING — Persons using this International Standard should be familiar with normal laboratory practice. This standard does not purport to address all of the safety problems, if any, associated with its use. It is the responsibility of the user to establish appropriate safety and health practices and to ensure compliance with any national regulatory conditions.

1 Scope

This International Standard specifies the requirements for the laboratory testing of the volume resistivity of specially prepared test pieces of vulcanized or thermoplastic rubber compounds rendered conducting or dissipative by the inclusion of carbon black or ionizable materials. The tests are suitable for materials with a resistivity of less than about 10^8 Ω·m.

Method 1 is the preferred method when test pieces with bonded electrodes are not available.

Method 2 is the preferred method when test pieces are moulded with the inclusion of bonded electrodes.

Method 3 may be used if the apparatus for method 1 or 2 is not available, but it has lower accuracy.

If a reference to this International Standard is made without specifying the method, then method 1 shall be used.

2 Normative reference

The following referenced documents are indispensable for the application of this document. For dated references, only the edition cited applies. For undated references, the latest edition of the referenced document (including any amendments) applies.

ISO 23529, *Rubber — General procedures for preparing and conditioning test pieces for physical test methods*

3 Method 1

3.1 Apparatus and materials

See Figure 1 for a schematic diagram of the test circuit.

3.1.1 Current source: A source of direct current which has a minimum resistance to earth of 10^{12} Ω and which will not cause a dissipation of power greater than 0,1 W within the test piece.

3.1.2 Means of measuring the current to an accuracy of 5 %.

NOTE Very small currents can be computed from measurement of the voltage drop across a known resistance using an electrometer (3.1.5).

3.1.3 Test piece holder and current electrodes, comprising a polystyrene strip of about 10 mm thickness to which the current electrodes are fixed (see Figure 1). The current electrodes shall be of clean metal approximately 5 mm long and running across the full width of the test piece, and be held in place by suitable clamps or grips.

The distance between the current electrodes shall be at least 75 mm, and the resistance between them shall be greater than 10^{12} Ω.

A minimum of three test piece holders shall be available.

© ISO 2011 – All rights reserved

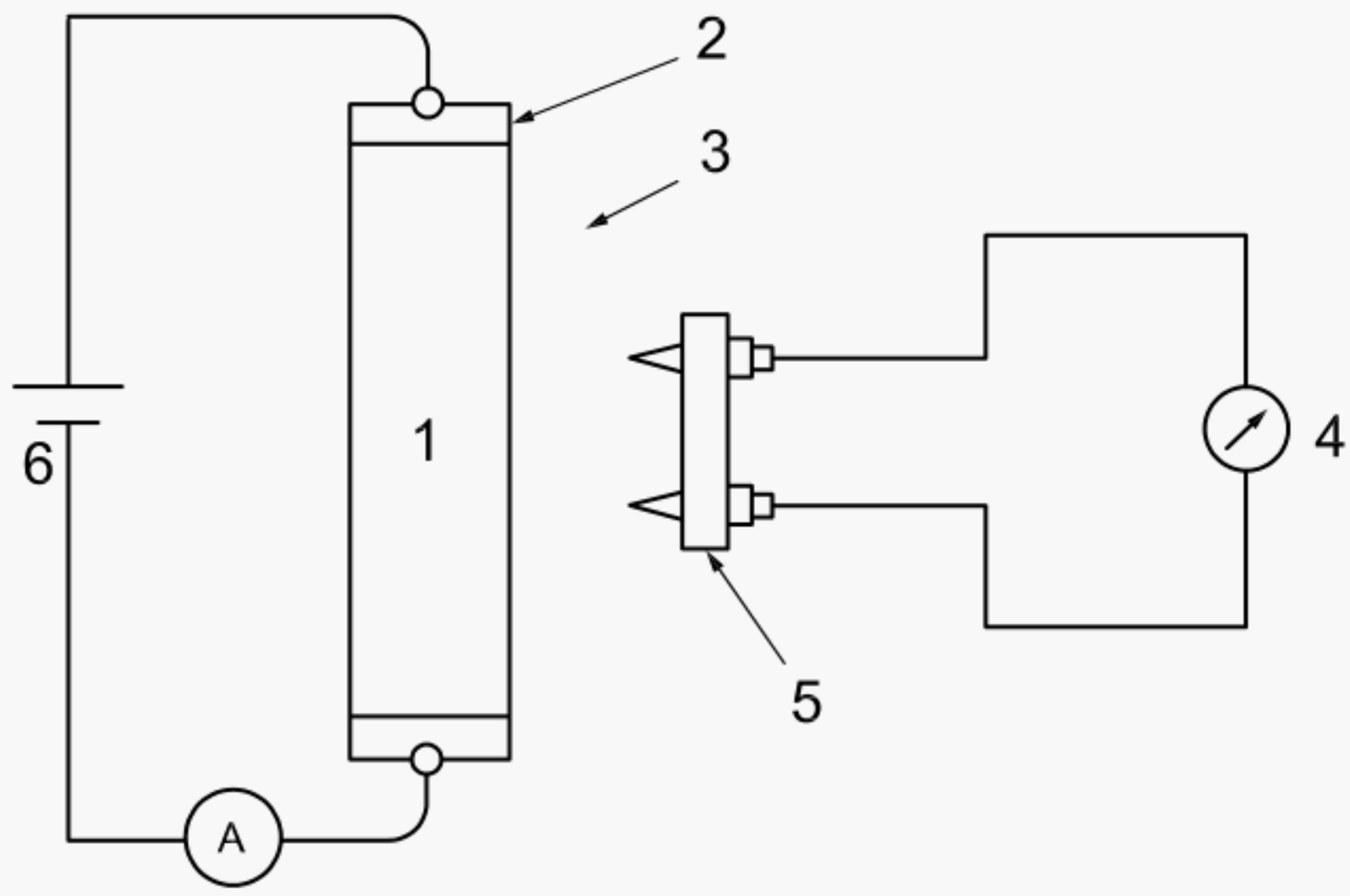

Key

1 test piece
2 current electrode
3 sheet of insulating material — resistivity at least 10^{13} Ω
4 electrometer
5 potentiometric electrode
6 adjustable direct-current voltage

Figure 1 — Schematic diagram of test circuit

3.1.4 Potentiometric electrodes, constructed so that they exert a contacting force of approximately 0,65 N for 10 mm wide test pieces or 1,3 N for 20 mm wide test pieces (see Figure 2). The resistance between the potentiometric electrodes shall be greater than 10^{12} Ω.

3.1.5 Electrometer, having an input resistance greater than 10^{11} Ω. References for such instruments are given in Annex A.

3.1.6 Sheet of insulating material, having a resistivity greater than 10^{13} Ω·m.

3.1.7 Oven, capable of being controlled at a temperature of (70 ± 2) °C.

3.2 Test piece

Each test piece shall be a strip, (10 ± 0,5) mm or (20 ± 0,5) mm wide, of vulcanized or thermoplastic rubber at least 70 mm long and normally 2 mm, 4 mm or 6,3 mm thick, with a tolerance of uniformity of thickness of ±5 %.

For comparison purposes, test pieces of the same size shall be used.

The test piece can be cut out with a knife or die, but care shall be taken to minimize distortion as this will affect the resistance values.

The surfaces of the test piece shall be clean; if necessary, they can be cleaned by rubbing with Fuller's earth (aluminium magnesium silicate) and water, washing with distilled water and allowing to dry. The surfaces shall not be buffed or abraded.

Do not clean the test pieces with organic materials that would attack or swell the rubber.

© ISO 2011 – All rights reserved

Dimensions in millimetres

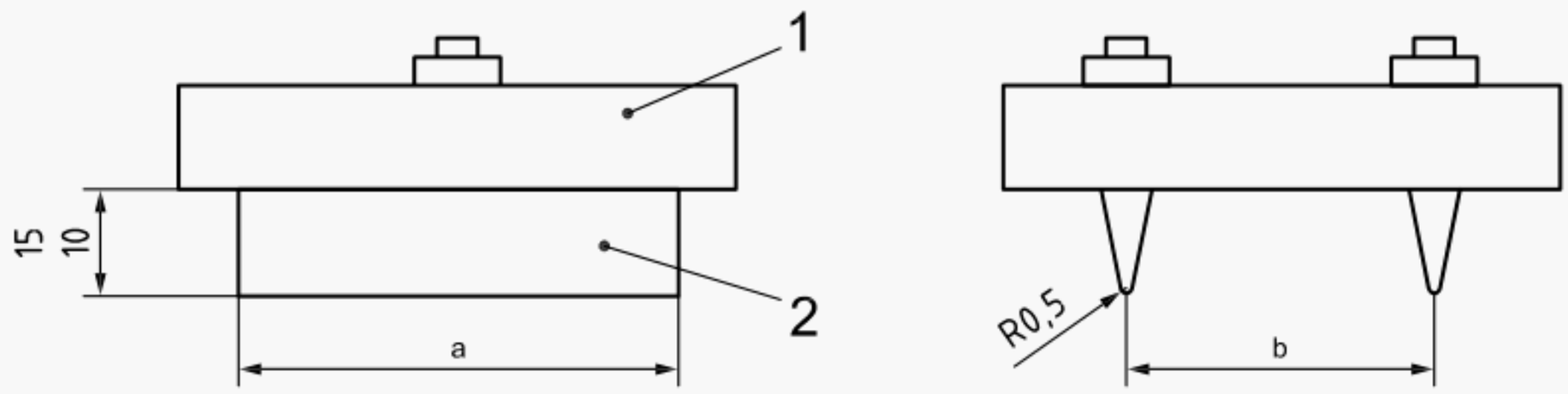

Key

1 polystyrene strip

2 stainless steel

[a] Test piece width + at least 10 mm.

[b] 10 mm to 20 mm measured to ±2 %.

Figure 2 — Potentiometric electrodes

3.3 Number of test pieces

Three test pieces of equal size shall be prepared and tested.

3.4 Procedure

Allow the test piece to rest for not less than 16 h after vulcanization or moulding, in accordance with ISO 23529.

Immediately prior to the commencement of the test, place the test piece on the test piece holder and clamp the current electrodes to its ends.

Without removing it from the test piece holder, heat the test piece in the oven for 2 h ± 15 min at a temperature of (70 ± 2) °C and then condition for not less than 16 h at a standard laboratory temperature and humidity in accordance with ISO 23529. Place the two potentiometric electrodes in position with a distance of 10 mm to 20 mm between them, ensuring that the knife edges are at right angles to the current flow and that neither is nearer than 20 mm to a current electrode. Measure the distance between the potentiometric electrodes to an accuracy of ±2 %.

Apply the current and, after the current has been passing for 1 min, determine the steady potential between the potentiometric electrodes, using the electrometer at the same standard temperature and humidity as was used to condition the test piece.

Repeat the measuring procedure twice more on the same test piece, moving the potentiometric electrodes each time to obtain measurements over lengths of the test piece evenly distributed between the current electrodes.

Similarly, test the other two test pieces.

© ISO 2011 – All rights reserved

3.5 Expression of results

Average the three measurements of resistance for each test piece and calculate the resistivity, ρ, in Ω·m, as follows:

$$\rho = \frac{V \times w \times t}{l \times I}$$

where

V is the measured potential, in V;

w is the width of the test piece, in m;

t is the thickness of the test piece, in m;

l is the distance between the potentiometer electrodes, in m;

I is measured current, in A.

Report the median value of the resistivities of the three test pieces.

3.6 Test report

The test report shall include the following information:

a) sample details:

   1) a full description of the sample and its origin,

   2) the method of preparation of the test piece from the sample, for example moulded or cut;

b) test method:

   1) a full reference to the test method used, i.e. ISO 1853:2011, method 1,

   2) the dimensions of the test piece used;

c) test details:

   1) the time, temperature and humidity of conditioning prior to the test,

   2) the voltage applied to the current electrodes,

   3) the current through the test piece,

   4) details of any procedures not specified in this International Standard;

d) test results:

   1) the median value of the resistivities of the three test pieces,

   2) the individual average resistivity value for each test piece, if required;

e) the date of the test.

4 Method 2

4.1 Apparatus and materials

4.1.1 Brass electrodes, with dimensions as given in Table 1 and Figure 3. These may be either made of solid brass or brass-plated.

© ISO 2011 – All rights reserved

4.1.2 Mould, suitable for use with brass electrodes.

4.1.3 Sheets of insulating material, with a volume resistivity greater than 10^{13} Ω·m and a surface resistivity greater than 10^{14} Ω.

4.1.4 Oven, capable of being controlled at (70 ± 2) °C.

4.1.5 Resistance-measuring instrument: Any suitable resistance-measuring instrument which does not dissipate more than 0,25 W in the test piece.

4.2 Test piece

Each test piece shall be a rectangular strip of rubber bonded during moulding to brass electrodes, with the dimensions given in Table 1 and shown in Figure 3.

Either clean the brass electrodes in dilute nitric acid, wash with distilled water and allow to dry, or clean them with emery cloth. If brass-plated electrodes are used, ensure that the cleaning treatment does not remove the plating. Do not apply cements or rubber solutions to the brass or rubber, as these could affect the electrical resistance.

When moulding the test pieces, ensure that the state of cure is similar to that of the product for which the compound is to be used.

Ensure also that the rubber blanks placed in the mould are of such mass and dimensions as to give the minimum amount of flow and spew in moulding, the spew being of even thickness all round the test piece. Wherever possible, any grain in the material shall run along the length of each test piece.

Remove each test piece from the mould with the minimum of bending and flexing. Remove any adhering spew from the electrodes, taking care not to buff or abrade the test piece, and ensure that the electrodes present a clean surface to the test leads. Reject any test piece showing evidence of insufficient mould filling, poor adhesion to the electrodes or any other defect.

Ensure that the surfaces of each test piece are clean by rubbing, where necessary, with Fuller's earth and water, washing with distilled water and allowing to dry.

Do not clean the test pieces with organic materials which would attack or swell the rubber.

NOTE Bonding to brass is more easily achieved with conventional vulcanized rubber and might not be successful with thermoplastic rubbers.

4.3 Number of test pieces

Three test pieces shall be prepared and tested.

4.4 Procedure

Allow the test piece to rest for not less than 16 h after vulcanization or moulding, in accordance with ISO 23529.

Place each test piece on one of the sheets of insulating material and heat in the oven for 2 h ± 15 min at a temperature of (70 ± 2) °C, to minimize the effects of strain caused by any previous treatment. Allow to cool and condition at standard laboratory temperature and humidity in accordance with ISO 23529 for not less than 16 h. Do not strain the test pieces after heating and before the test has been completed.

After conditioning each test piece, and without removing it from its sheet of insulating material, measure, using the resistance-measuring instrument, the resistance between the bonded electrodes of each test piece in turn at the same standard temperature and humidity as was used to condition the test pieces.

© ISO 2011 – All rights reserved

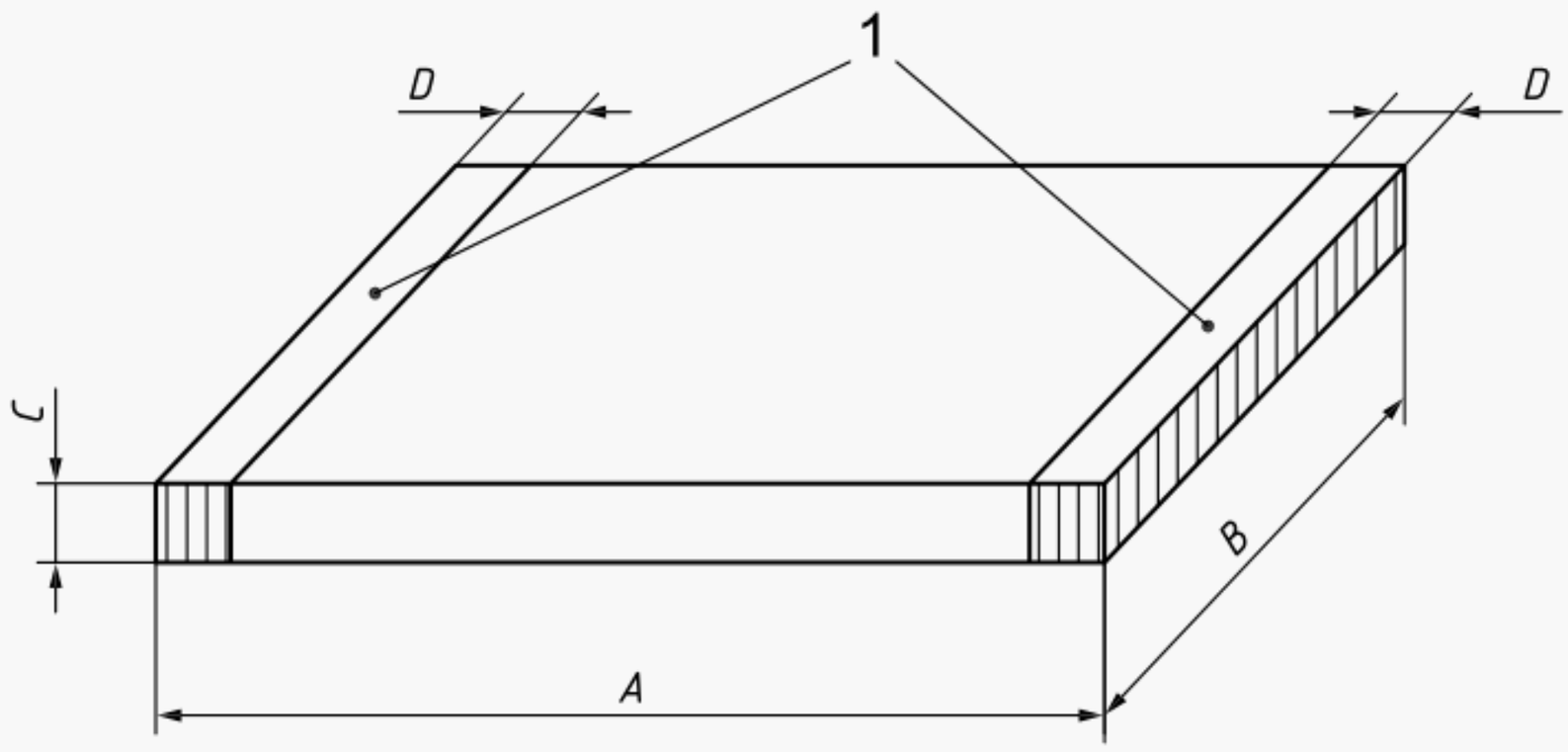

Key

1 electrodes

Figure 3 — Test piece for method 2

Table 1 — Dimensions of test pieces for methods 2 and 3

Dimensions in millimetres

Test piece for method	Dimensions			
	A	*B*	*C*	*D*
2	76 ± 0,5	25 ± 0,5	6,3 ± 0,3	3 ± 0,2
3	50 (approx.)	10 to 150	2 to 6,3	5 (approx.)

4.5 Expression of results

Calculate the resistivity of the material, in Ω·m, using the following formula:

$$R \times 2{,}3 \times 10^{-3}$$

where R is the median value of the resistance measurements on the three test pieces, in Ω.

4.6 Test report

The test report shall include the following information:

a) sample details:

   1) a full description of the sample and its origin,

   2) the method of preparation of the test pieces from the sample, for example moulded or cut;

b) a full reference to the test method used, i.e. ISO 1853:2011, method 2;

c) test details:

   1) the time, temperature and humidity of conditioning prior to the test,

   2) the voltage applied to the current electrodes,

© ISO 2011 – All rights reserved

3) the current through the test piece;

d) test results:

1) the median value of the resistivities of the three test pieces,

2) the individual resistivity value for each test piece, if required;

e) the date of the test.

5 Method 3

5.1 Apparatus and materials

5.1.1 Colloidal graphite, dispersion in water.

5.1.2 Tin foil strip, 5 mm wide and about 25 µm thick.

5.1.3 Resistance-measuring instrument: Any suitable resistance-measuring instrument which does not dissipate more than 30 µW/mm^3 in the test piece.

5.1.4 Sheets of insulating material, with a volume resistivity greater than 10^{13} Ω·m and a surface resistivity greater than 10^{14} Ω.

5.1.5 Oven, capable of being controlled at (70 ± 2) °C.

5.2 Test piece

Each test piece shall be a rectangular strip of vulcanized or thermoplastic rubber with the dimensions given in Table 1 and shown in Figure 4. The thickness of the test piece shall be measured at six equally spaced points along its length and no individual measurement shall vary by more than 5 % from the mean value.

NOTE Results obtained from the test might vary depending on the orientation of any grain in the material with respect to the length A shown in Figure 4.

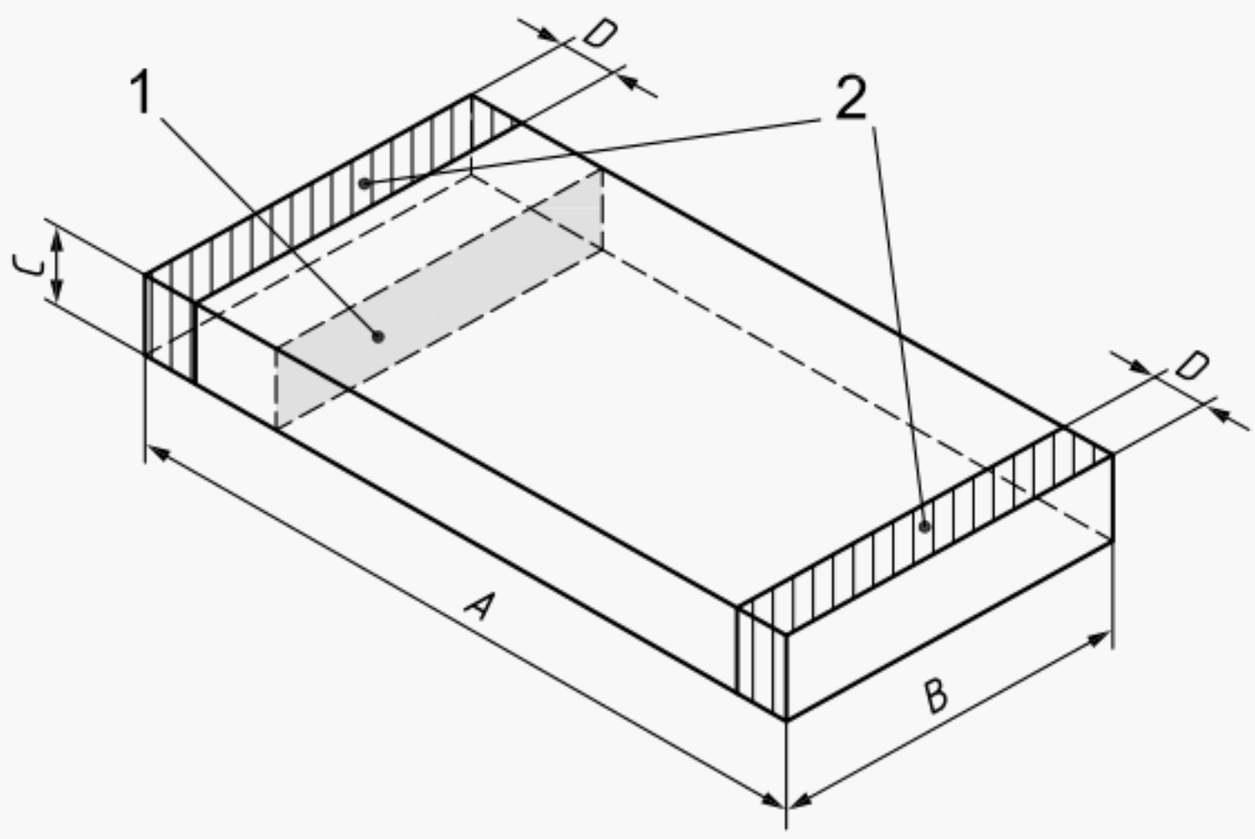

Key

1 cross-sectional area, S, of test piece

2 electrodes

Figure 4 — Test piece for method 3

© ISO 2011 – All rights reserved

Prepare test pieces either by moulding or by cutting from a sheet of the same thickness as that specified for the test pieces. The test pieces can be cut out with a knife or die. Take care to minimize distortion as this will affect the resistivity values. Do not buff or abrade the test pieces.

Ensure that the surfaces of the test pieces are clean by rubbing, where necessary, with Fuller's earth and water, washing with distilled water and allowing to dry. Do not clean the test pieces with organic materials which would attack or swell the rubber.

To form the electrodes, coat the ends of each test piece with colloidal graphite to a distance of 5 mm. While the coating is still wet, wrap a strip of tin foil round each test piece to cover the graphited area except for the end surfaces. Prepare a suitable contact to each foil so that the subsequent connection to the resistance-measuring instrument can be made without disturbing the foil. Allow the electrodes to dry.

5.3 Number of test pieces

Three test pieces shall be prepared and tested.

5.4 Procedure

Allow the test piece to rest for not less than 16 h after vulcanization or moulding, in accordance with ISO 23529.

Place each test piece, with its current electrodes attached, on one of the sheets of insulating material and heat in the oven for 2 h ± 15 min at a temperature of (70 ± 2) °C to minimize the effects of strain caused by any previous treatment. Allow to cool and condition at standard laboratory temperature and humidity in accordance with ISO 23529 for not less than 16 h. Do not strain the test pieces after heating and before the test has been completed.

After conditioning each test piece, and without removing it from its insulating sheet, ascertain that the tin foil is still adhering to its faces. Using the resistance-measuring instrument, measure the resistance between the electrodes of each test piece in turn at the same standard temperature and humidity as was used to condition the test pieces.

5.5 Expression of results

Calculate the resistivity of each test piece, in Ω·m, using the following formula:

$$\frac{R \times S}{L}$$

where

R is the resistance, in Ω;

S is the cross-sectional area, in m^2;

L is the distance between the inner edges of the foil, in m.

Report the median value of the resistivities of the three test pieces.

5.6 Test report

The test report shall include the following information:

a) sample details:

   1) a full description of the sample and its origin,

   2) the method of preparation of the test pieces from the sample, for example moulded or cut;

b) test method:

   1) a full reference to the test method used, i.e. ISO 1853:2011, method 3,

© ISO 2011 – All rights reserved

2) the dimensions of the test piece used;

c) test details:

1) the time, temperature and humidity of conditioning prior to the test,

2) the voltage applied to the current electrodes,

3) the current through the test piece;

d) test results:

1) the median value of the resistivities of the three test pieces,

2) the individual resistivity value for each test piece, if required;

e) the date of the test.

© ISO 2011 – All rights reserved

Annex A
(informative)

Solid-state electrometer

Measurement of voltage and current in the ranges suitable for this International Standard can be performed by means of a solid-state electrometer having a sufficiently high input resistance.

An instrument of this type is the Model 602 solid-state electrometer produced by Keithley Instruments.[1)] Used as a voltmeter, the Model 602 electrometer has an input resistance greater than 10^{14} Ω and a range from 0,001 V at full scale to 10 V; as an ammeter, its range is from 10^{-14} A at full scale to 0,3 A.

This apparatus is manufactured by:

Keithley Instruments
28775 Aurora Road
Cleveland
Ohio 44139
USA

Its European headquarters is at:

Keithley Instruments GmbH
Landsberger Straße 65
D-82110 Germering
Germany

An instrument measuring volume resistivity in compliance with this International Standard is the Elastocon EE 01 Resistivity Tester.[1)] The EE 01 instrument has an integrated differential voltmeter and ammeter. The ammeter can measure currents down to 0,01 nA and the differential voltmeter which is integrated with the potentiometric electrode has an input resistance of >0,1 TΩ.

This instrument is manufactured by:

Elastocon AB
Göteborgsvägen 99
S-504 60 BORÅS
Sweden

1) This is an example of a suitable instrument available commercially. This information is given for the convenience of users of this International Standard and does not constitute an endorsement by ISO of this instrument.

© ISO 2011 – All rights reserved

ICS 83.060

Price based on 10 pages

© ISO 2011 – All rights reserved

This page deliberately left blank

NO COPYING WITHOUT BSI PERMISSION EXCEPT AS PERMITTED BY COPYRIGHT LAW

British Standards Institution (BSI)

BSI is the national body responsible for preparing British Standards and other standards-related publications, information and services.

BSI is incorporated by Royal Charter. British Standards and other standardization products are published by BSI Standards Limited.

About us

We bring together business, industry, government, consumers, innovators and others to shape their combined experience and expertise into standards -based solutions.

The knowledge embodied in our standards has been carefully assembled in a dependable format and refined through our open consultation process. Organizations of all sizes and across all sectors choose standards to help them achieve their goals.

Information on standards

We can provide you with the knowledge that your organization needs to succeed. Find out more about British Standards by visiting our website at bsigroup.com/standards or contacting our Customer Services team or Knowledge Centre.

Buying standards

You can buy and download PDF versions of BSI publications, including British and adopted European and international standards, through our website at bsigroup.com/shop, where hard copies can also be purchased.

If you need international and foreign standards from other Standards Development Organizations, hard copies can be ordered from our Customer Services team.

Subscriptions

Our range of subscription services are designed to make using standards easier for you. For further information on our subscription products go to bsigroup.com/subscriptions.

With **British Standards Online (BSOL)** you'll have instant access to over 55,000 British and adopted European and international standards from your desktop. It's available 24/7 and is refreshed daily so you'll always be up to date.

You can keep in touch with standards developments and receive substantial discounts on the purchase price of standards, both in single copy and subscription format, by becoming a **BSI Subscribing Member**.

PLUS is an updating service exclusive to BSI Subscribing Members. You will automatically receive the latest hard copy of your standards when they're revised or replaced.

To find out more about becoming a BSI Subscribing Member and the benefits of membership, please visit bsigroup.com/shop.

With a **Multi-User Network Licence (MUNL)** you are able to host standards publications on your intranet. Licences can cover as few or as many users as you wish. With updates supplied as soon as they're available, you can be sure your documentation is current. For further information, email bsmusales@bsigroup.com.

Revisions

Our British Standards and other publications are updated by amendment or revision.

We continually improve the quality of our products and services to benefit your business. If you find an inaccuracy or ambiguity within a British Standard or other BSI publication please inform the Knowledge Centre.

Copyright

All the data, software and documentation set out in all British Standards and other BSI publications are the property of and copyrighted by BSI, or some person or entity that owns copyright in the information used (such as the international standardization bodies) and has formally licensed such information to BSI for commercial publication and use. Except as permitted under the Copyright, Designs and Patents Act 1988 no extract may be reproduced, stored in a retrieval system or transmitted in any form or by any means – electronic, photocopying, recording or otherwise – without prior written permission from BSI. Details and advice can be obtained from the Copyright & Licensing Department.

Useful Contacts:

Customer Services
Tel: +44 845 086 9001
Email (orders): orders@bsigroup.com
Email (enquiries): cservices@bsigroup.com

Subscriptions
Tel: +44 845 086 9001
Email: subscriptions@bsigroup.com

Knowledge Centre
Tel: +44 20 8996 7004
Email: knowledgecentre@bsigroup.com

Copyright & Licensing
Tel: +44 20 8996 7070
Email: copyright@bsigroup.com

BSI Group Headquarters

389 Chiswick High Road London W4 4AL UK

bsi.

...making excellence a habit.™