# INTERNATIONAL STANDARD

# ISO 26622-1

Second edition
2017-04

## Modular taper interface with ball track system —

## Part 1: Dimensions and designation of shanks

*Interfaces à cône modulaire avec système de serrage à billes —*

*Partie 1: Dimensions et désignation des queues*

Reference number
ISO 26622-1:2017(E)

© ISO 2017

# Contents

Page

**Foreword** ..... **iv**
**Introduction** ..... **v**
**1 Scope** ..... **1**
**2 Normative references** ..... **1**
**3 Terms and definitions** ..... **1**
**4 Dimensions** ..... **1**
4.1 General ..... 1
4.2 Tapered hollow shank ..... 2
**5 Clamping force** ..... **8**
**6 Designation** ..... **8**
**Annex A** (normative) **O-rings** ..... **9**
**Annex B** (informative) **Recommendation for use and application** ..... **10**

© ISO 2017 – All rights reserved

# Foreword

ISO (the International Organization for Standardization) is a worldwide federation of national standards bodies (ISO member bodies). The work of preparing International Standards is normally carried out through ISO technical committees. Each member body interested in a subject for which a technical committee has been established has the right to be represented on that committee. International organizations, governmental and non-governmental, in liaison with ISO, also take part in the work. ISO collaborates closely with the International Electrotechnical Commission (IEC) on all matters of electrotechnical standardization.

The procedures used to develop this document and those intended for its further maintenance are described in the ISO/IEC Directives, Part 1. In particular the different approval criteria needed for the different types of ISO documents should be noted. This document was drafted in accordance with the editorial rules of the ISO/IEC Directives, Part 2 (see www.iso.org/directives).

Attention is drawn to the possibility that some of the elements of this document may be the subject of patent rights. ISO shall not be held responsible for identifying any or all such patent rights. Details of any patent rights identified during the development of the document will be in the Introduction and/or on the ISO list of patent declarations received (see www.iso.org/patents).

Any trade name used in this document is information given for the convenience of users and does not constitute an endorsement.

For an explanation on the voluntary nature of standards, the meaning of ISO specific terms and expressions related to conformity assessment, as well as information about ISO's adherence to the World Trade Organization (WTO) principles in the Technical Barriers to Trade (TBT) see the following URL: www.iso.org/iso/foreword.html

This document was prepared by Technical Committee ISO/TC 29, *Small tools*.

This second edition cancels and replaces the first edition (ISO 26622-1:2008), Figure 1 of which has been technically revised to correct the following:

— gauge diameter, $d_2$;

— tool changer groove diameter, $d_3$;

— ball track dimensioning, related to $b_2$, $w_2$ and $d_9$;

— flange hole dimensioning, related to $l_{24}$ and $d_{13}$;

— taper undercut depth;

— divers other corrections in the drawings.

A list of all parts in the ISO 26622 series can be found on the ISO website.


© ISO 2017 – All rights reserved

# Introduction

The modular taper with ball track system design originated from a joint development effort between two prominent tooling manufacturers in 1985. The benefits to be achieved by the joint development effort were to offer a complete but flexible tooling system-to-machine connection by joining the strengths of two tooling suppliers for the European and North American markets. The modular taper with ball track system product was first introduced at exposition mondiale de la machine-outil (EMO) in Milan in 1987.

Since its introduction, this tooling system has become a globally accepted design for both static and rotating applications. The design characteristics of the modular taper interface with ball track system allow it to be used equally well on both turning and rotating applications. The high mechanical advantage of the modular taper with ball track system design application allows for small springs, small bearings and high spindle speeds. This tool interface uses three areas of contact (one face and two on the taper) that provide a very simple but rigid tool design. These features have made the modular taper with ball track system the quick-change tooling of choice on many tens of thousands of machine tools throughout the world.

The purpose of this document is to ensure compliance of the manufacturing accuracy and quality of the modular taper with the ball track system tool interface.

The International Organization for Standardization (ISO) draws attention to the fact that it is claimed that compliance with this document can involve the use of a patent concerning the modular taper with ball track system.

ISO takes no position concerning the evidence, validity and scope of this patent right.

The holder of this patent right has assured ISO that he/she is willing to waive the exercise of this patent right throughout the world. In this respect, the statement of the holder of this patent right is registered with ISO. Information can be obtained from:

ISO Central Secretariat
International Organization for Standardization (ISO)
CP 56 - CH-1211 Geneva 20, Switzerland

© ISO 2017 – All rights reserved

INTERNATIONAL STANDARD ISO 26622-1:2017(E)

# Modular taper interface with ball track system —

Part 1:
**Dimensions and designation of shanks**

## 1 Scope

This document specifies the dimensions for modular taper interface with ball track system: tapered shanks for automatic and manual tool exchange to be applied on machine tools (e.g. lathe machines, drilling machines, milling machines and turn/milling machine centres). A range of shank sizes is specified and details of the coolant-sealing O-ring are specified in Annex A.

The shank incorporates a flange with a groove to enable automatic tool exchange. The tools can also be exchanged manually. The clamping of the shank can be realized by the use of locking balls of a standard size and by a variety of mechanisms.

The torque is transmitted at the tail end of the shank by friction, locking elements and keys.

## 2 Normative references

The following documents are referred to in the text in such a way that some or all of their content constitute requirements of this document. For dated references, only the edition cited applies. For undated references, the latest edition of the referenced document (including any amendments) applies.

ISO 1101, *Geometrical Product Specifications (GPS) — Geometrical tolerancing — Tolerances of form, orientation, location and run-out*

ISO 2768-1, *General tolerances — Part 1: Tolerances for linear and angular dimensions without individual tolerance indications*

ISO 2768-2, *General tolerances — Part 2: Geometrical tolerances for features without individual tolerance indications*

## 3 Terms and definitions

No terms and definitions are listed in this document.

ISO and IEC maintain terminological databases for use in standardization at the following addresses:

— IEC Electropedia: available at http://www.electropedia.org/

— ISO Online browsing platform: available at http://www.iso.org/obp

## 4 Dimensions

### 4.1 General

Tolerancing of form, orientation, location and run-out shall be in accordance with ISO 1101. Tolerances not specified shall be of tolerance class “m” in accordance with ISO 2768-1 and tolerance class “k” in accordance with ISO 2768-2.

© ISO 2017 – All rights reserved

## 4.2 Tapered hollow shank

The dimensions of modular tapered shanks with the ball track system and the details of automatic tool changer/chip hole configuration are shown in Figure 1 and given in Table 1.

Surface roughness in micrometres
Dimensions in millimetres

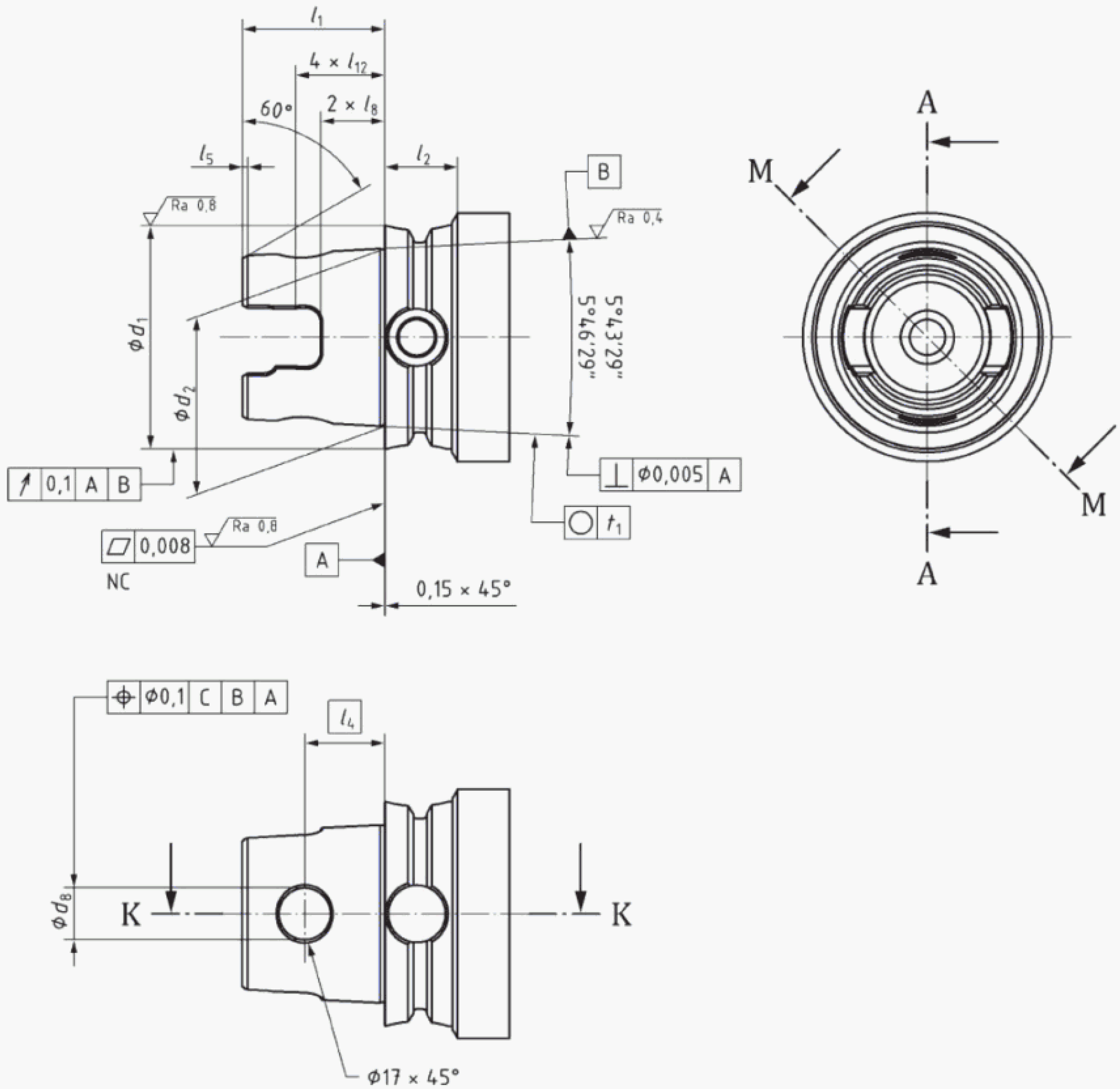


**Figure 1** *(continued)*


© ISO 2017 – All rights reserved

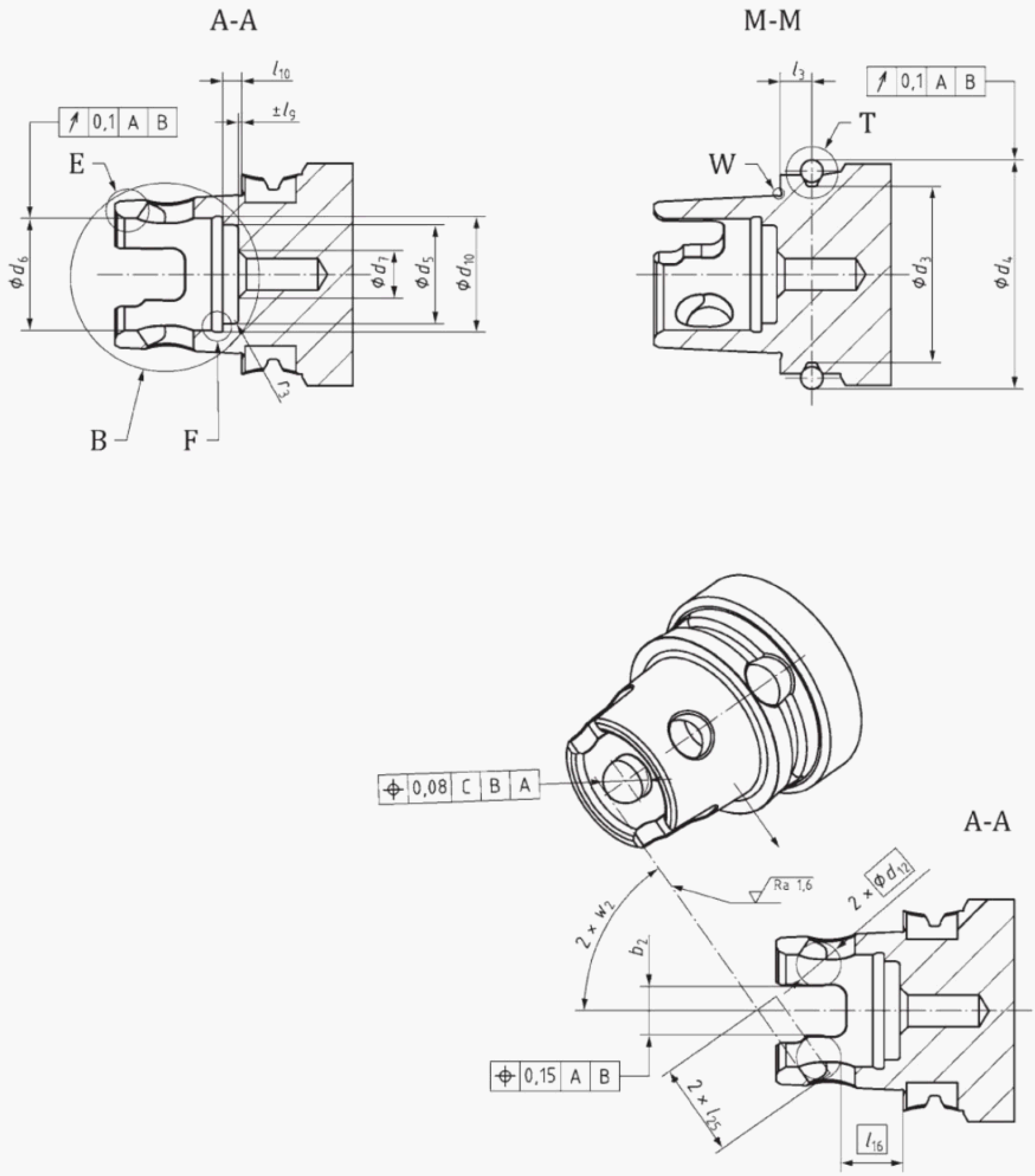


**Figure 1** *(continued)*

© ISO 2017 – All rights reserved

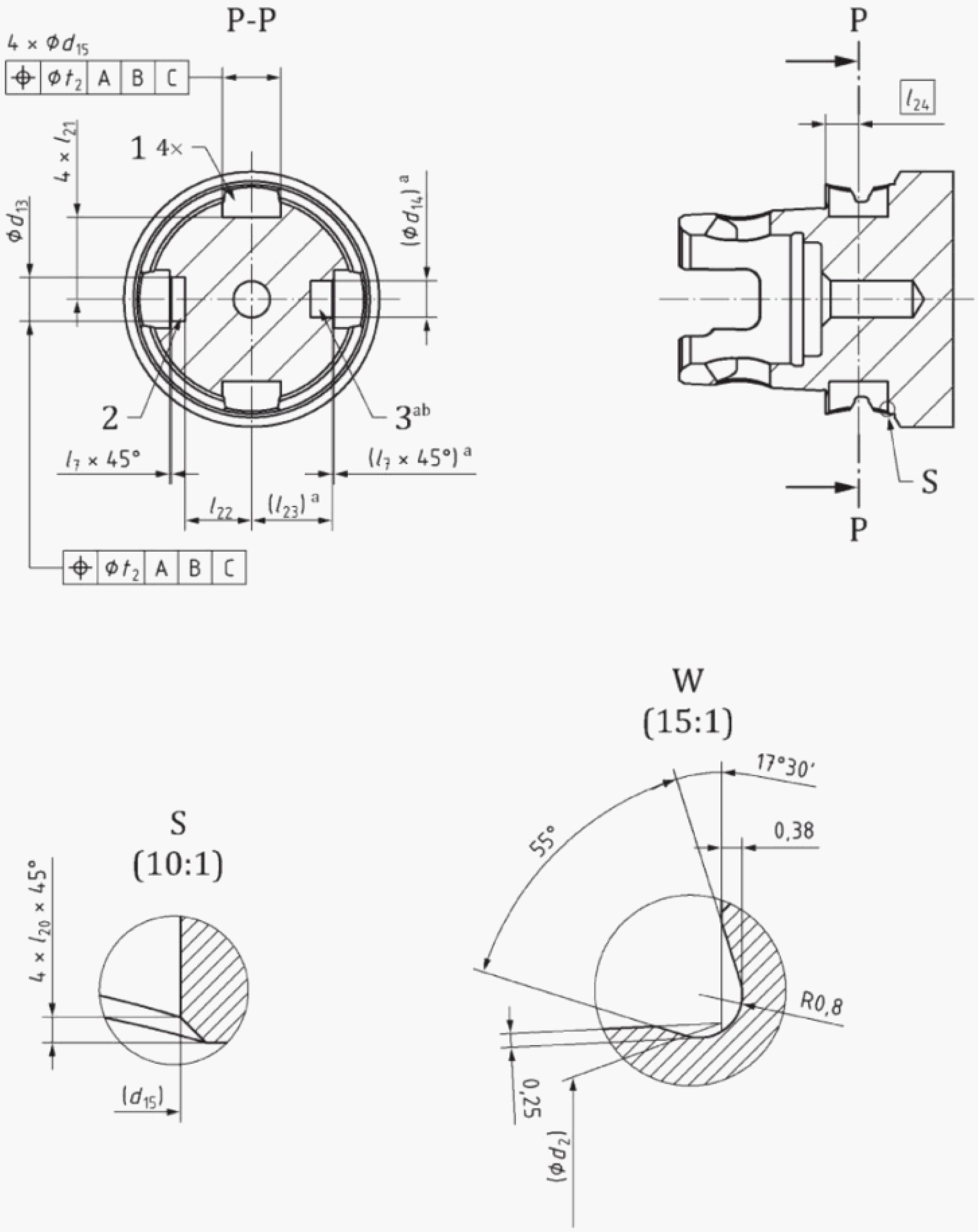


**Figure 1** *(continued)*


© ISO 2017 – All rights reserved

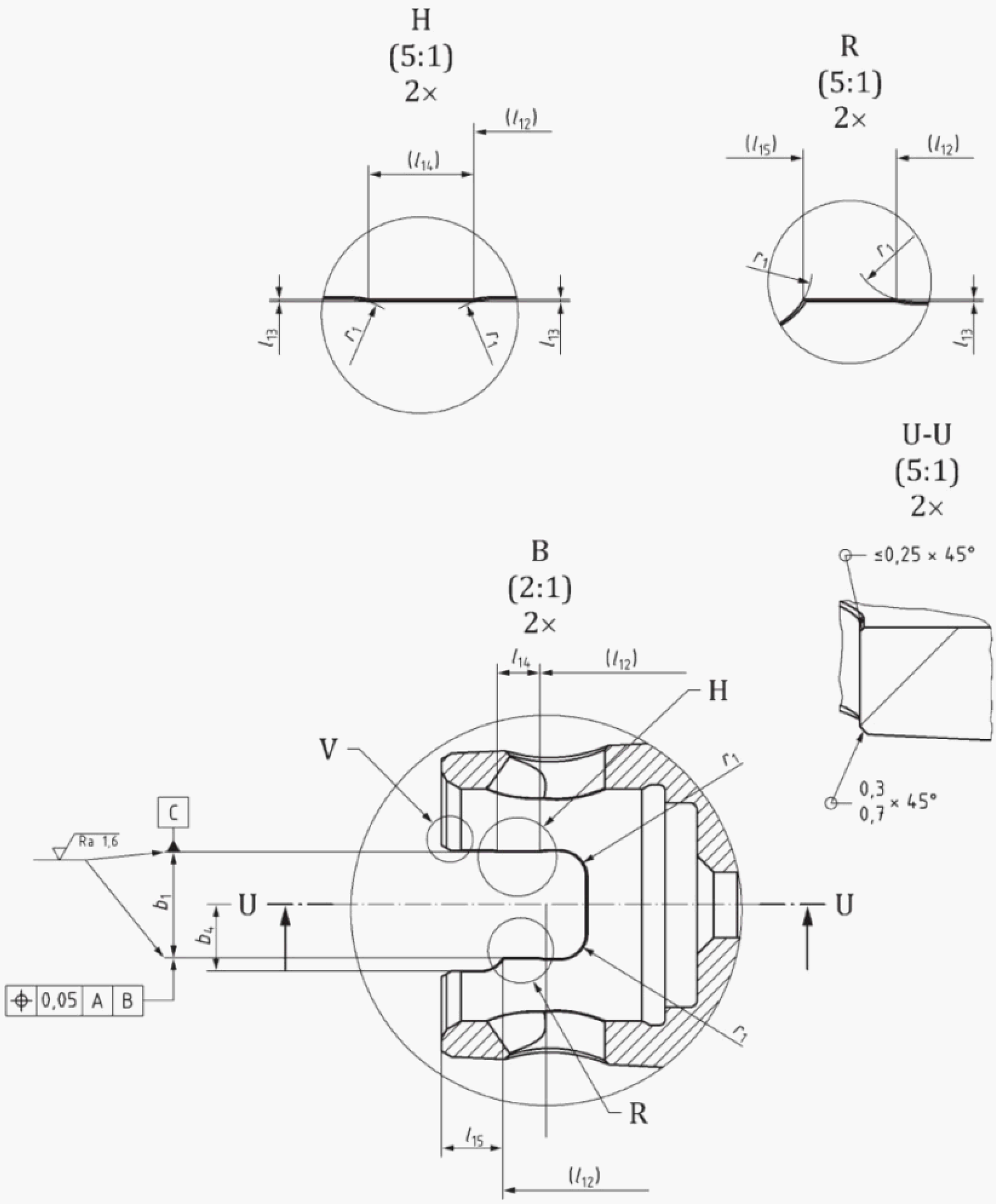


**Figure 1** *(continued)*

© ISO 2017 – All rights reserved

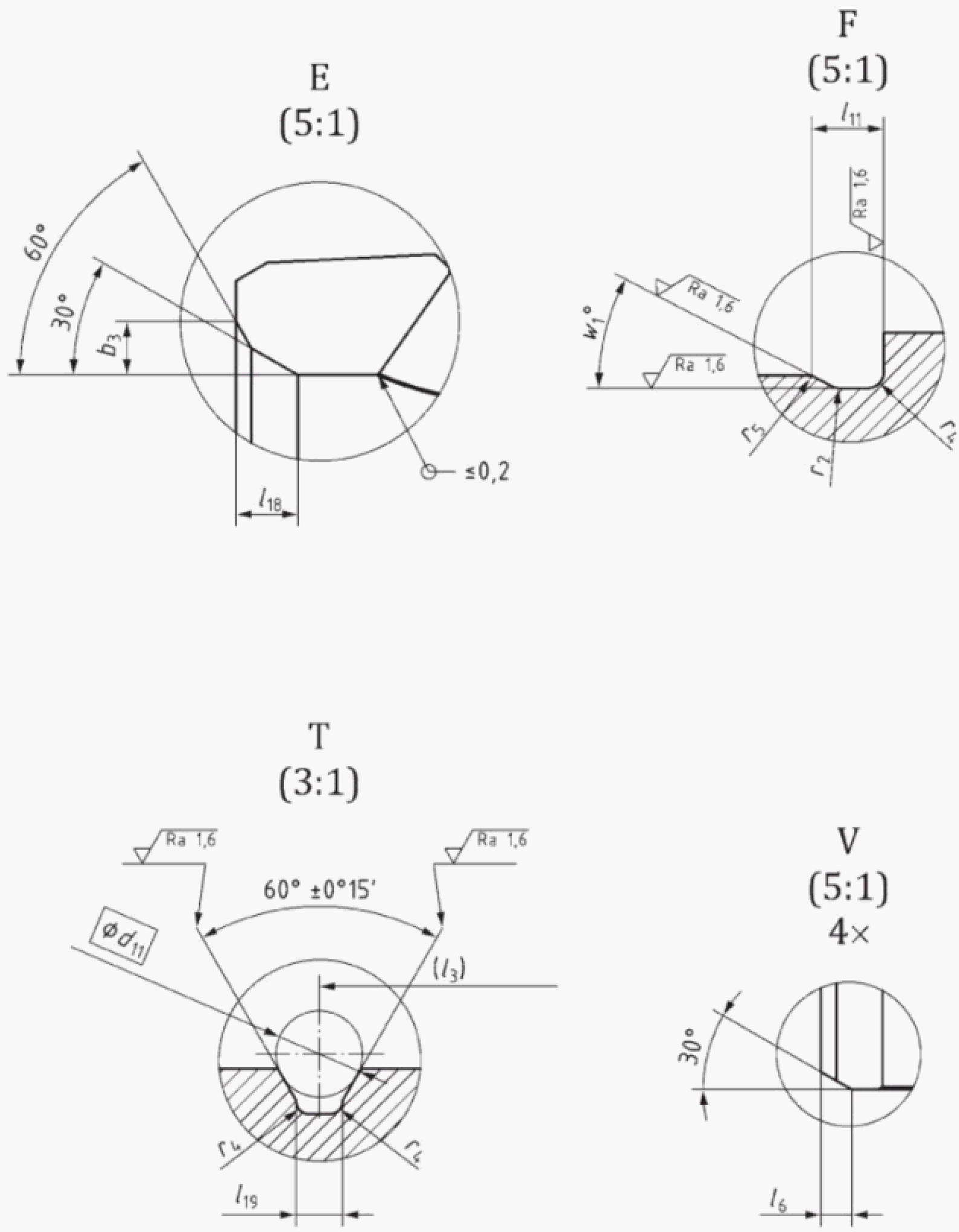


**Key**

1 automatic tool changer holes

2 orientation hole

3 balance hole

a Optional.

b Design, configuration and dimensions optional.

**Figure 1 — Tapered hollow shank**


© ISO 2017 – All rights reserved

**Table 1 — Tapered hollow shank dimensions**

Dimensions in millimetres

| Nominal size | | 32 | 40 | 50 | 63 | 80 | 100 |
|---|---|---|---|---|---|---|---|
| $b_1$ | +0,15<br>+0,1 | 8,9 | 10 | 14 | 16 | 20 | 24 |
| $b_2$ | ±0,125 | 7,775 | 8,175 | 11,065 | 15,245 | 22,825 | 34,985 |
| $b_3$ | ±0,1 | 1 | 1,85 | 2 | 2,6 | 2,6 | 2,6 |
| $b_4$ | +0,11<br>+0,01 | 5,95 | 7 | 9 | 10 | 12,6 | 14,6 |
| $d_1$ | 0<br>−0,1 | 32 | 40 | 50 | 63 | 80 | 100 |
| $d_2$ | ±0,007 5 | 23,997 5 | 29,997 5 | 39,997 5 | 49,997 5 | 63,997 5 | 81,997 5 |
| $d_3$ | | 28,96 | 36,96 | 42,7 | 55,7 | 72,7 | 92,7 |
| $d_4$ | ±0,1 | 36,45 | 44,45 | 59,4 | 72,4 | 89,4 | 109,4 |
| $d_5$ | ±0,1 | 14,9 | 18 | 24,5 | 31,1 | 43,1 | 57,1 |
| $d_6$ | +0,1<br>0 | 17,65 | 21 | — | — | — | — |
| $d_6$ | +0,15<br>0 | — | — | 28,2 | 35,2 | 48 | 62 |
| $d_7$ | max. | 5 | 7 | 9 | 12 | 16 | 18 |
| $d_8$ | | 7,5 | 9,5 | 12,5 | 14,5 | 18,5 | 20,5 |
| $d_9$ | +0,125<br>+0,025 | 7 | 9 | 12 | 14 | 18 | 20 |
| $d_{10}$ | ±0,05 | 18,6 | 21,87 | 30 | 38,4 | 50,4 | 64,35 |
| $d_{11}$ | | 3,5 | 3,5 | 7 | 7 | 7 | 7 |
| $d_{12}$ | | 7 | 9 | 12 | 14 | 18 | 20 |
| $d_{13}$ | +0,2<br>0 | — | 7 | 9 | 12 | 12 | 12 |
| $d_{14}$ | +0,2<br>0 | — | 5,5 | 7,5 | 10 | 10 | 10 |
| $d_{15}$ | H11 | — | 9 | 12 | 16 | 16 | 16 |
| $l_1$ | 0<br>−0,1 | 20 | 25 | 32 | 40 | 45 | 50 |
| $l_2$ | min. | 10 | 12 | 18 | 20 | 22 | 22 |
| $l_3$ | 0<br>−0,2 | 5 | 6 | 9 | 10 | 11 | 11 |
| $l_4$ | | 10,8 | 13,6 | 17,2 | 22,4 | 24,9 | 26,7 |
| $l_5$ | | 0,75 | 1 | 1,5 | 1,5 | 1,5 | 1,5 |
| $l_6$ | | 1 | 1 | 1,5 | 1,5 | 1,5 | 2 |
| $l_7$ | | — | 0,5 | 0,5 | 0,5 | 0,5 | 0,5 |
| $l_8$ | ±0,1 | 8 | 11 | 12 | 18 | 18,5 | 19 |
| $l_9$ | ±0,1 | −0,5 | −0,5 | −0,5 | 1,1 | −0,1 | −0,1 |
| $l_{10}$ | ±0,05 | 2 | 3 | 5 | 5,15 | 9,2 | 9,9 |
| $l_{11}$ | | 2,2 | 2,4 | 3,2 | 4,5 | 4,5 | 4,5 |
| $l_{12}$ | | — | 15,3 | 18,3 | 25 | 27,5 | 28 |
| $l_{13}$ | ±0,05 | — | 0,15 | 0,15 | 0,15 | 0,15 | 0,15 |
| $l_{14}$ | | — | 4,7 | 6,25 | 6,5 | 8,5 | 9,5 |

© ISO 2017 – All rights reserved

**Table 1** *(continued)*

| Nominal size | 32 | 40 | 50 | 63 | 80 | 100 |
|---|---|---|---|---|---|---|
| $l_{15}$ ±0,1 | 4,8 | 6 | 8,5 | 9,3 | 10,4 | 13,4 |
| $l_{16}$ | 9,5 | 11,86 | 14,5 | 19,6 | 20,7 | 22,5 |
| $l_{17}$ ±0,25 | 0,5 | 0,75 | 0,75 | 0,75 | 1 | 1,25 |
| $l_{18}$ | 1,2 | 2 | 2,5 | 3 | 3 | 3 |
| $l_{19}$ ±0,25 | 2,25 | 2,25 | 3,75 | 3,75 | 3,75 | 3,75 |
| $l_{20}$ ±0,1 | — | 0,3 | 0,5 | 0,7 | 0,7 | 0,7 |
| $l_{21}$ ±0,05 | — | 14,45 | 17,55 | 22,55 | 31,25 | 41,45 |
| $l_{22}$ ±0,05 | — | 11,2 | 13,8 | 18,3 | 27 | 37,2 |
| $l_{23}$ ±0,1 | — | 9,15 | 11,7 | 16,15 | 24,85 | 35,05 |
| $l_{24}$ | — | 5,95 | 8,95 | 9,95 | 10,95 | 10,95 |
| $l_{25}$ | 16,5 | 20 | 25 | 29,5 | 39,5 | 48 |
| $r_1$ | 3 | 3,1 | 3,5 | 4 | 6 | 6 |
| $r_2$ ±0,1 | 0,4 | 0,4 | 0,4 | 0,8 | 0,8 | 0,8 |
| $r_3$ | 0,4 | 0,8 | 1,2 | 1,2 | 1,2 | 1,2 |
| $r_4$ ±0,25 | 0,5 | 0,5 | 1 | 1 | 1 | 1 |
| $r_5$ | — | — | — | 0,5 | 0,5 | 0,5 |
| $t_1$ | 0,008 | 0,01 | 0,013 | 0,015 | 0,015 | 0,015 |
| $t_2$ | — | 0,08 | 0,1 | 0,1 | 0,15 | 0,15 |
| **Angles** (degrees) | | | | | | |
| $w_1$ | 30 | 45 | 60 | 90 | 90 | 90 |
| $w_2$ ±30′ | 55 | 55 | 55 | 55 | 60 | 60 |

## 5 Clamping force

The clamping system shall provide sufficient clamping force to ensure contact of the shank flange with the face of the receiver, as well as seating the taper by elastic deformation. The torque transmitting capacity of the interface is increased by an increase in the magnitude of the clamping force.

A guide to clamping forces for modular taper shanks is given in Annex B.

## 6 Designation

A modular taper shank with ball track system in accordance with this document shall be designated as follows:

a) "Modular taper shank";

b) reference to this document (i.e. ISO 26622-1);

c) designation symbol "TS";

d) nominal size, in millimetres.

EXAMPLE Designation of a modular taper shank with ball track system of nominal size 63 mm:

**Modular taper shank ISO 26622-1 - TS 63**


© ISO 2017 – All rights reserved

# Annex A
(normative)

# O-rings

An O-ring is retained by a groove ($d_{10}$) in the ID ($d_6$) of the external taper in order to provide a coolant seal between the external taper and the clamping mechanism.

The recommended O-ring material is fluorocarbon with a hardness of 90 durometer.

See Figure A.1 and Table A.1 for coolant-sealing O-ring dimensions.

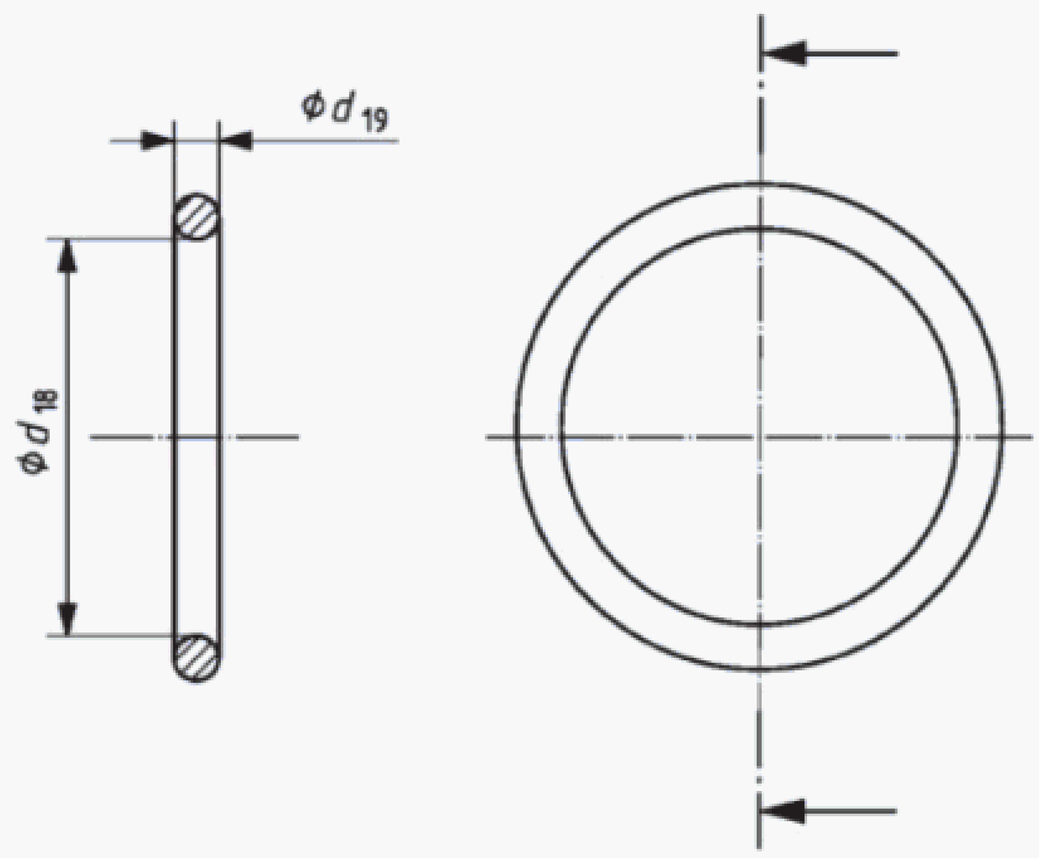


**Figure A.1 — O-ring dimensions**

**Table A.1 — O-ring dimensions**

| Nominal size | 32 | 40 | 50 | 63 | 80 | 100 |
|---|---|---|---|---|---|---|
| $d_{18}$ | 15,6 | 18,77 | 25,07 | 31,34 | 44,04 | 59,92 |
| $d_{19}$ | 1,78 | 1,78 | 2,62 | 3,53 | 3,53 | 3,53 |

© ISO 2017 – All rights reserved

# Annex B
(informative)

# Recommendation for use and application

## B.1 Clamping forces

Variations of modular taper shank and modular taper receiver size within the specified limits of tolerances will cause the portion of the clamping force acting on the flange surface to vary. The flange contact surface is decisive for the stiffness of the modular taper interface with ball track system.

The clamping forces listed in Table B.1 only apply to modular taper shanks with the ball track system.

**Table B.1 — Range of clamping forces**

| **Nominal size** | **32** | **40** | **50** | **63** | **80** | **100** |
|---|---|---|---|---|---|---|
| **Minimum clamping force,** kN | 9 | 13 | 22 | 36 | 53 | 75 |
| **Maximum clamping force**, kN | 18 | 27 | 40 | 58 | 80 | 110 |

NOTE 1 Minimum clamping forces can be sufficient when operational loads are low (e.g. cutting and feed forces in finish machining).

NOTE 2 Maximum clamping forces can be required when high operational loads are encountered (e.g. cutting and feed forces in heavy machining).

NOTE 3 Mechanical force derives from the clamping force and from the locking mechanism design.

## B.2 Information about speeds, toques, bending loads and stiffness

The manufacturer should provide information regarding permissible speeds, torque transmitting capacities, bending loads and stiffness.

## B.3 Material and heat treatment

Material and heat-treatment specifications for modular taper shanks should be selected considering strength, hardness, toughness and wear requirements. It is recommended that shanks be through hardened.


© ISO 2017 – All rights reserved