BS ISO 5130:2019

BSI Standards Publication

Acoustics — Measurements of sound pressure level emitted by stationary road vehicles

bsi.

INTERNATIONAL STANDARD

ISO 5130

Third edition
2019-07

Acoustics — Measurements of sound pressure level emitted by stationary road vehicles

Acoustique — Mesurages du niveau de pression acoustique émis par les véhicules routiers en stationnement

Reference number
ISO 5130:2019(E)

© ISO 2019

COPYRIGHT PROTECTED DOCUMENT

© ISO 2019

All rights reserved. Unless otherwise specified, or required in the context of its implementation, no part of this publication may be reproduced or utilized otherwise in any form or by any means, electronic or mechanical, including photocopying, or posting on the internet or an intranet, without prior written permission. Permission can be requested from either ISO at the address below or ISO's member body in the country of the requester.

ISO copyright office
CP 401 • Ch. de Blandonnet 8
CH-1214 Vernier, Geneva
Phone: +41 22 749 01 11
Fax: +41 22 749 09 47
Email: copyright@iso.org
Website: www.iso.org

Published in Switzerland

Contents

Page

Foreword ..... **iv**
Introduction ..... **v**
1 Scope **1**
2 Normative references **1**
3 Terms and definitions **2**
4 Instrumentation **2**
4.1 Instrumentation for acoustical measurement 2
4.1.1 General 2
4.1.2 Operational check 2
4.1.3 Verification 3
4.2 Instrumentation for engine-speed measurement 3
5 Acoustical environment, meteorological conditions and background noise **3**
5.1 Test site 3
5.2 Meteorological conditions 4
5.3 Background noise 4
6 Test procedure **4**
6.1 General comments 4
6.2 Positioning and preparation of the vehicle 4
6.3 Microphone position 5
6.4 Target engine speed 10
6.4.1 General 10
6.4.2 Vehicles of category L 10
6.4.3 Vehicles of category M, N 11
6.5 Engine operating conditions 11
6.6 Multi-mode exhaust system 11
7 Measurements **11**
8 Interpretation of results **12**
9 Measurement uncertainty **12**
10 Test report **12**
Annex A (informative) **Technical background information** **14**
Annex B (informative) **Measurement uncertainty — Framework for uncertainty analysis based on ISO/IEC Guide 98-3** **15**
Bibliography **18**

© ISO 2019 – All rights reserved

Foreword

ISO (the International Organization for Standardization) is a worldwide federation of national standards bodies (ISO member bodies). The work of preparing International Standards is normally carried out through ISO technical committees. Each member body interested in a subject for which a technical committee has been established has the right to be represented on that committee. International organizations, governmental and non-governmental, in liaison with ISO, also take part in the work. ISO collaborates closely with the International Electrotechnical Commission (IEC) on all matters of electrotechnical standardization.

The procedures used to develop this document and those intended for its further maintenance are described in the ISO/IEC Directives, Part 1. In particular, the different approval criteria needed for the different types of ISO documents should be noted. This document was drafted in accordance with the editorial rules of the ISO/IEC Directives, Part 2 (see www.iso.org/directives).

Attention is drawn to the possibility that some of the elements of this document may be the subject of patent rights. ISO shall not be held responsible for identifying any or all such patent rights. Details of any patent rights identified during the development of the document will be in the Introduction and/or on the ISO list of patent declarations received (see www.iso.org/patents).

Any trade name used in this document is information given for the convenience of users and does not constitute an endorsement.

For an explanation of the voluntary nature of standards, the meaning of ISO specific terms and expressions related to conformity assessment, as well as information about ISO's adherence to the World Trade Organization (WTO) principles in the Technical Barriers to Trade (TBT) see www.iso.org/iso/foreword.html.

This document was prepared by Technical Committee ISO/TC 43, *Acoustics*, Subcommittee SC 1, *Noise*.

This third edition cancels and replaces the second edition (ISO 5130:2007) which has been technically revised. It also incorporates the Amendment ISO 5130:2007/Amd.1:2012. The main changes compared to the previous edition are as follows:

— In the scope, it has been clarified that this document applies only to vehicles of categories L, M and N equipped with internal combustion engines, and furthermore that vehicles with an internal combustion engine which cannot operate when the vehicle is operated at stationary are outside the scope of this document.

— The microphone position to be used, depending on the location of the exhaust outlets, has been modified to include new variations of exhaust outlet design. New and updated figures have been added to clarify the position of microphone to be used.

Any feedback or questions on this document should be directed to the user's national standards body. A complete listing of these bodies can be found at www.iso.org/members.html.

© ISO 2019 – All rights reserved

Introduction

This sound pressure level measurement procedure has been developed for use in the engineering evaluation of the sound pressure level performance of road vehicles in the vicinity of the exhaust systems. The method is intended to check vehicles in use and also to determine variations in the exhaust sound pressure level that can result from

— the wear, maladjustment or modification of particular components, when the defect does not appear by visual inspection;

— the partial or complete removal of devices increasing the emission of certain sound pressure levels.

It is possible to determine some of these variations by comparing the measurements with reference measurements made under similar conditions, for example during the type approval of the vehicle, using the same method. Other variations can be detected only when the engine is operated at a realistic load.

The document incorporates certain provisions of SAE J1492:2008-10[1] for measuring the sound pressure levels of exhaust systems of passenger cars and light trucks.

© ISO 2019 – All rights reserved

INTERNATIONAL STANDARD ISO 5130:2019(E)

Acoustics — Measurements of sound pressure level emitted by stationary road vehicles

1 Scope

This document specifies a test procedure, environment and instrumentation for measuring the exterior sound pressure levels from road vehicles under stationary conditions, providing a continuous measure of the sound pressure level over a range of engine speeds.

This document applies only to road vehicles of categories L, M, and N equipped with internal combustion engines. Vehicles where an internal combustion engine cannot operate when the vehicle is at stationary conditions are outside the scope of this document.

The method is designed to meet the requirements of simplicity as far as they are consistent with reproducibility of results under the operating conditions of the vehicle.

It is within the scope of this document to measure the stationary A-weighted sound pressure level during

— type approval measurements of vehicle;

— measurements at the manufacturing stage;

— measurements at official testing stations;

— measurements at roadside testing.

This document specifices a test method to determine a reference sound level which is unique for the vehicle and therefore not suitable to compare against a general limit, as test condition, microphone condition location relative to the sound sources can vary significantly. The test conditions in proximity and at engine speeds significantly higher compared to real operation conditions in traffic are deliberately chosen to enable in-use tests at higher background conditions, which are typical for road-side checks.

Technical background information is given in Annex A.

2 Normative references

The following documents are referred to in the text in such a way that some or all of their content constitutes requirements of this document. For dated references, only the edition cited applies. For undated references, the latest edition of the referenced document (including any amendments) applies.

ISO/IEC Guide 98-3, *Uncertainty of measurement — Part 3: Guide to the expression of uncertainty in measurement (GUM:1995)*

ISO/IEC 17025, *General requirements for the competence of testing and calibration laboratories*

ISO 26101:2017, *Acoustics — Test methods for the qualification of free-field environments*

IEC 60942:2017, *Electroacoustics — Sound calibrators*

IEC 61183, *Electroacoustics — Random-incidence and diffuse-field calibration of sound level meters*

IEC 61260-1, *Electroacoustics — Octave-band and fractional-octave-band filters — Part 1: Specifications*

IEC 61260-3, *Electroacoustics — Octave-band and fractional-octave-band filters — Part 3: Periodic tests*

IEC 61672-1, *Electroacoustics — Sound level meters — Part 1: Specifications*

© ISO 2019 – All rights reserved

IEC 61672-3, *Electroacoustics — Sound level meters — Part 3: Periodic tests*

3 Terms and definitions

For the purposes of this document, the following terms and definitions apply.

ISO and IEC maintain terminological databases for use in standardization at the following addresses:

— ISO Online browsing platform: available at https://www.iso.org/obp

— IEC Electropedia: available at http://www.electropedia.org/

3.1
rated engine speed
S
engine speed at which the engine develops its rated maximum net power as stated by the manufacturer

Note 1 to entry: If the rated maximum net power is reached at several engine speeds, the rated engine speed *S* used in this document is the highest engine speed at which the rated maximum net power is reached.

Note 2 to entry: ISO 80000-2[2] defines this term as "rated engine rotational frequency". The term "rated engine speed" was retained due to its common understanding by practitioners and use in government regulations.

3.2 Vehicle categories

3.2.1
category L
motor vehicles with fewer than four wheels

Note 1 to entry: United Nations Economic Commission for Europe (UN ECE) document TRANS/WP.29/78/Rev.6 (11 July 2017)[3] extended the L category to four-wheeled vehicles as defined by L6 and L7 in ISO 362-1:2015[4], 3.4.1.5 and 3.4.1.6.

3.2.2
category M
power-driven vehicles having at least four wheels and used for the carriage of passengers

3.2.3
category N
power-driven vehicles having at least four wheels and used for the carriage of goods

4 Instrumentation

4.1 Instrumentation for acoustical measurement

4.1.1 General

The instruments for measuring sound pressure levels, including microphone(s) as well as cable(s), windscreen(s), recording devices and other accessories, if used, shall meet the requirements for a class 1 instrument according to IEC 61672-1 for free field or random incidence application, as appropriate. Filters shall meet the requirements for a class 1 instrument according to IEC 61260-1.

The measurements shall be made using the frequency-weighting A and the time-weighting F.

4.1.2 Operational check

At the beginning and at the end of every measurement session, the entire sound pressure level measuring system shall be checked at one or more frequencies by means of a sound calibrator meeting the requirements for a class 1 instrument according to IEC 60942. Without any further adjustment, the

 © ISO 2019 – All rights reserved

difference between the readings of two consecutive checks shall be less than or equal to 0,5 dB. If this value is exceeded, the results of measurements obtained after the previous satisfactory check shall be discarded.

In connection with each measurement session and at least at the beginning and the end of each measurement day, where possible, check the impact of residual sound levels on measured results to determine their potential impact on the measurement results.

4.1.3 Verification

Conformance of the sound pressure level measuring instrument including microphone, the filters and the sound calibrator with the relevant requirements of IEC 61672-1, IEC 61260-1 and IEC 60942, respectively, shall be verified by the existence of a valid certificate of conformance from the manufacturer. Conformance testing in accordance with IEC 61672-3, IEC 61260-3 and IEC 60942:2017, Annex B, respectively, is required for verification. If applicable, random incidence response of the microphone shall be verified by a procedure from IEC 61183.

All conformance testing shall be conducted by a laboratory meeting the requirements of ISO/IEC 17025 and the maximum-permitted uncertainty defined in IEC 61672-1, IEC 61260-1 and IEC 60942.

The sound calibrator should be calibrated at intervals not exceeding one year, the conformance of the instrumentation system with the requirements of IEC 61672-1 should be verified at intervals not exceeding two years, and the conformance of analog filters with the requirements of IEC 61260-1 should be verified at intervals not exceeding two years.

NOTE Testing in accordance with IEC 61672-3 does not fully verify conformance with the requirements of IEC 61672-1, unless it has been pattern approved in accordance with IEC 61672-2[5].

4.2 Instrumentation for engine-speed measurement

The rotational speed of the engine shall be measured with an instrument meeting the specification limits of at least ±2 % or better at the engine speeds required for the measurements being performed.

5 Acoustical environment, meteorological conditions and background noise

5.1 Test site

A suitable test site shall be outdoors and consist of a flat surface of level concrete, dense asphalt with no appreciable level of porosity or similar hard material surface. It shall be free from snow, grass, loose soil, ashes or other sound-absorbing material. It shall be in an open space free from large reflecting surfaces, such as parked vehicles, buildings, billboards, trees, shrubbery, parallel walls, people, etc., within a 3 m radius from the microphone location and any point of the vehicle.

As an alternative to outdoor testing, a hemi-anechoic chamber may be used. The hemi-anechoic chamber shall fulfill the acoustical requirements given above. In addition to the 3 m distance criteria described above, the testing facilities shall have a cut-off frequency below:

— one-third-octave band below the lowest fundamental frequency of the engine during test, or

— 100 Hz (whichever is the lower).

For a source located at the projection of the reference point on the reflecting plane, the broadband qualification criteria given in ISO 26101:2017, Annex A shall be met within a volume having a radius of at least 3 m.

© ISO 2019 – All rights reserved

In addition, the radius of the qualified volume, and the height of the hemi-anechoic chamber shall be at least two times the height of the measurement reference point.

NOTE The noise performance of indoor testing facilities is specified in terms of the cut-off frequency (Hz). This is the frequency above which the room can be assumed to act as a hemi-anechoic space.

5.2 Meteorological conditions

The tests shall not be carried out if the wind speed, including gusts, exceeds 5 m/s during the sound-measurement interval. Tests shall not be carried out during periods of precipitation.

5.3 Background noise

Readings on the measuring instruments produced by ambient noise and wind shall be at least 10 dB below the A-weighted sound pressure level to be measured. A suitable windscreen may be fitted to the microphone, provided that account is taken of its effect on the sensitivity of the sound level meter.

6 Test procedure

6.1 General comments

It is essential that persons technically trained and experienced in current sound measurement techniques select the test instrumentation and conduct the test.

Variations in measured sound pressure levels can occur due to variations in test sites, atmospheric conditions and test equipment; see Annex B.

Instrument manufacturers' specification for orientation of the microphone relative to the sound source and the location of the observer relative to the microphone shall be followed. The test may be performed with a hand-held sound level meter. However, the sound level meter or microphone should be mounted on a stand or fixture for stability. When possible, a microphone extension cable should be used and measurement or recording devices should be located away from the microphone.

CAUTION — Caution should be exercised when measuring rear- and mid-engine vehicles because engine and cooling-fan noise can prevent accurate measurement of exhaust noise.

6.2 Positioning and preparation of the vehicle

The vehicle transmission shall be in neutral position and the clutch engaged, or in parking position for automatic transmission, and the parking brake applied for safety.

The vehicle air conditioner, if equipped, shall be turned off.

If the vehicle is fitted with fan(s) having an automatic actuating mechanism, this system shall not be interfered with during the sound pressure level measurements.

The engine hood or compartment cover shall be closed.

Before each series of measurements, the engine shall be brought to its normal operating temperature, as specified by the manufacturer.

In case of a two-wheeled motor-driven vehicle having no neutral gear position, measurements shall be carried out with the rear wheel raised off the ground so that the wheel can rotate freely.

If it is necessary to raise a two-wheeled vehicle off the ground to perform the test, the microphone measurement position shall be adjusted to achieve the specified distance from the reference point of the exhaust pipe; see Figure 1 for the location of the reference points.

 © ISO 2019 – All rights reserved

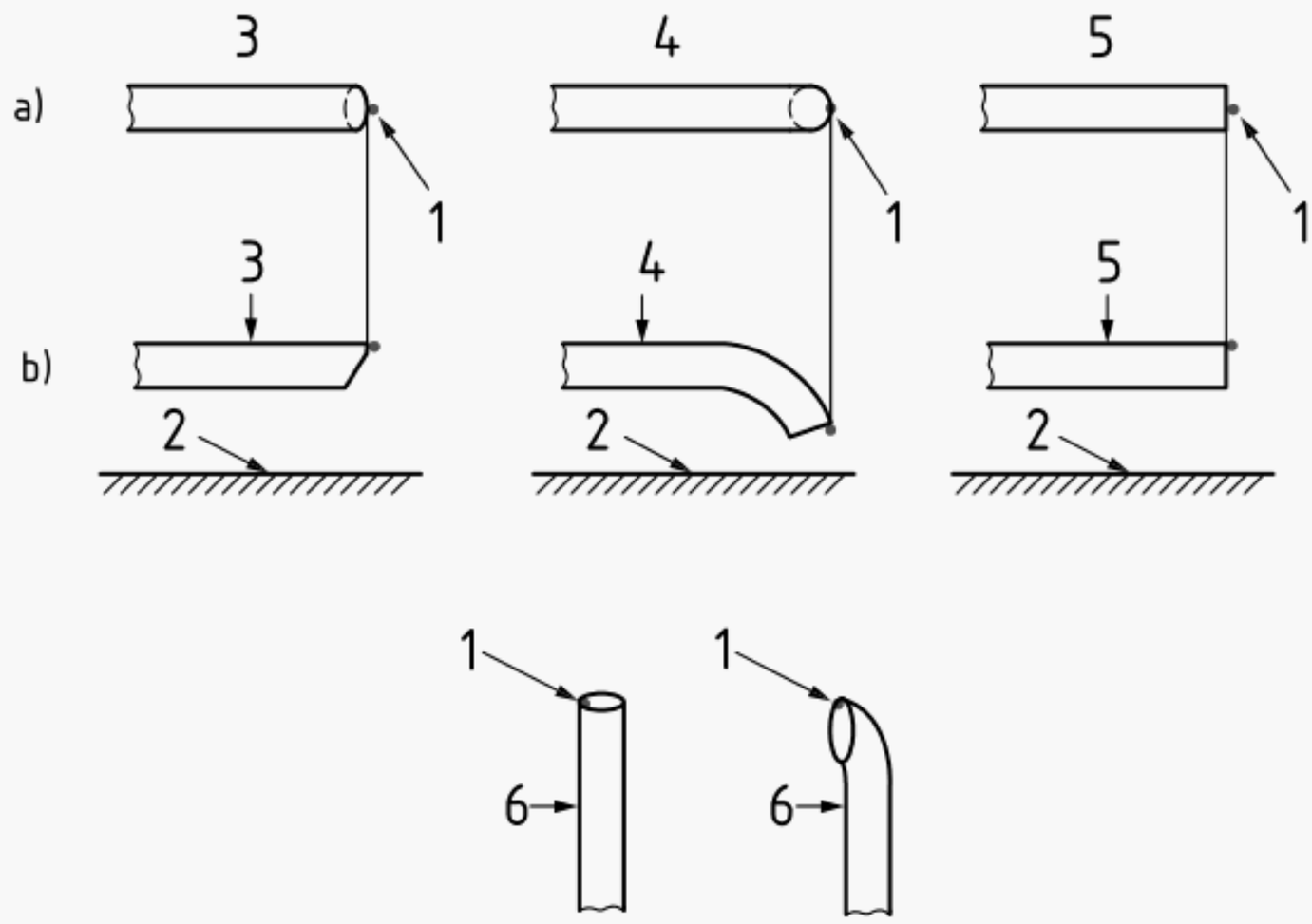

Key

a) top view
b) side view
1 reference point
2 road surface
3 mitered pipe
4 bent down pipe
5 straight pipe
6 vertical pipe

Figure 1 — Reference point

6.3 Microphone position

The microphone shall be located at a distance of 0,5 m ± 0,01 m from the reference point of the exhaust pipe defined in Figure 1 and at an angle of 45° ± 5° to the vertical plane containing the flow axis of the pipe termination. The microphone shall be at the height of the reference point, but not less than 0,2 m from the ground surface. The reference axis of the microphone shall lie in a plane parallel to the ground surface and shall be directed towards the reference point on the exhaust outlet.

If two microphone positions are possible, the location furthest laterally from the vehicle longitudinal centreline shall be used.

If the flow axis of the exhaust outlet pipe is at 90° to the vehicle longitudinal centreline, the microphone shall be located at the point that is furthest from the engine.

If a vehicle has two or more exhaust outlets spaced less than or equal to 0,3 m apart and connected to a single silencer, only one set of measurements shall be made. The microphone shall be located relative to the outlet furthest from the vehicle's longitudinal centreline, or, when such outlet does not exist, to the outlet that is highest above the ground.

For vehicles having an exhaust provided with outlets spaced more than 0,3 m apart or more than one silencer, one set of measurements shall be made for each outlet.

For vehicles with a vertical exhaust (e.g. commercial vehicles), the microphone shall be placed at the height of the exhaust outlet. Its axis shall be vertical and oriented upwards. It shall be placed at a distance of 0,5 m ± 0,01 m from the exhaust-pipe reference point as defined in Figure 1, but never less than 0,2 m from the side of the vehicle nearest to the exhaust.

© ISO 2019 – All rights reserved

For vehicles for which the reference point of the exhaust pipe is not accessible or located under the vehicle body, as shown in Figure 2 c) and d), because of the presence of obstacles that form part of the vehicle (e.g. spare wheel, fuel tank, battery compartment), the microphone shall be located at least 0,2 m from the nearest obstacle, including the vehicle body, and shall not be located under the vehicle. Its axis of maximum sensitivity shall face the exhaust outlet from the position least concealed by the above-mentioned obstacles.

In case the distance from the exhaust outlet to the outer side of the vehicle is larger than 0,2 m [Figure 2 c), d) and e)], the following distances of d_1 or d_2 shall be chosen, see Figure 2 d):

— **Case 1:**

  — d_1 shall be equal to 0,5 m and the distance from the side (outer border of the vehicle) shall be at least 0,2 m.

  — d_2 shall be equal to 0,5 m and the distance from the side (outer border of the vehicle) shall be at least 0,2 m.

— **Case 2 (if Case 1 is not fulfilled):**

  — d_1 shall be at least 0,5 m and the distance from the side (outer border of the vehicle) shall be equal to 0,2 m.

  — d_2 shall be at least 0,5 m and the distance from the side (outer border of the vehicle) shall be equal to 0,2 m.

When several positions are possible, as shown in Figure 2 d), the microphone position giving the lowest value of d_1 or d_2 shall be used.

Figure 2 a) to e) shows examples of the position of the microphone, depending on the location of the exhaust pipe.

For the purpose of roadside checking, the reference point may be moved to the outer surface of the vehicle body.

© ISO 2019 – All rights reserved

Dimensions in metres, unless otherwise indicated

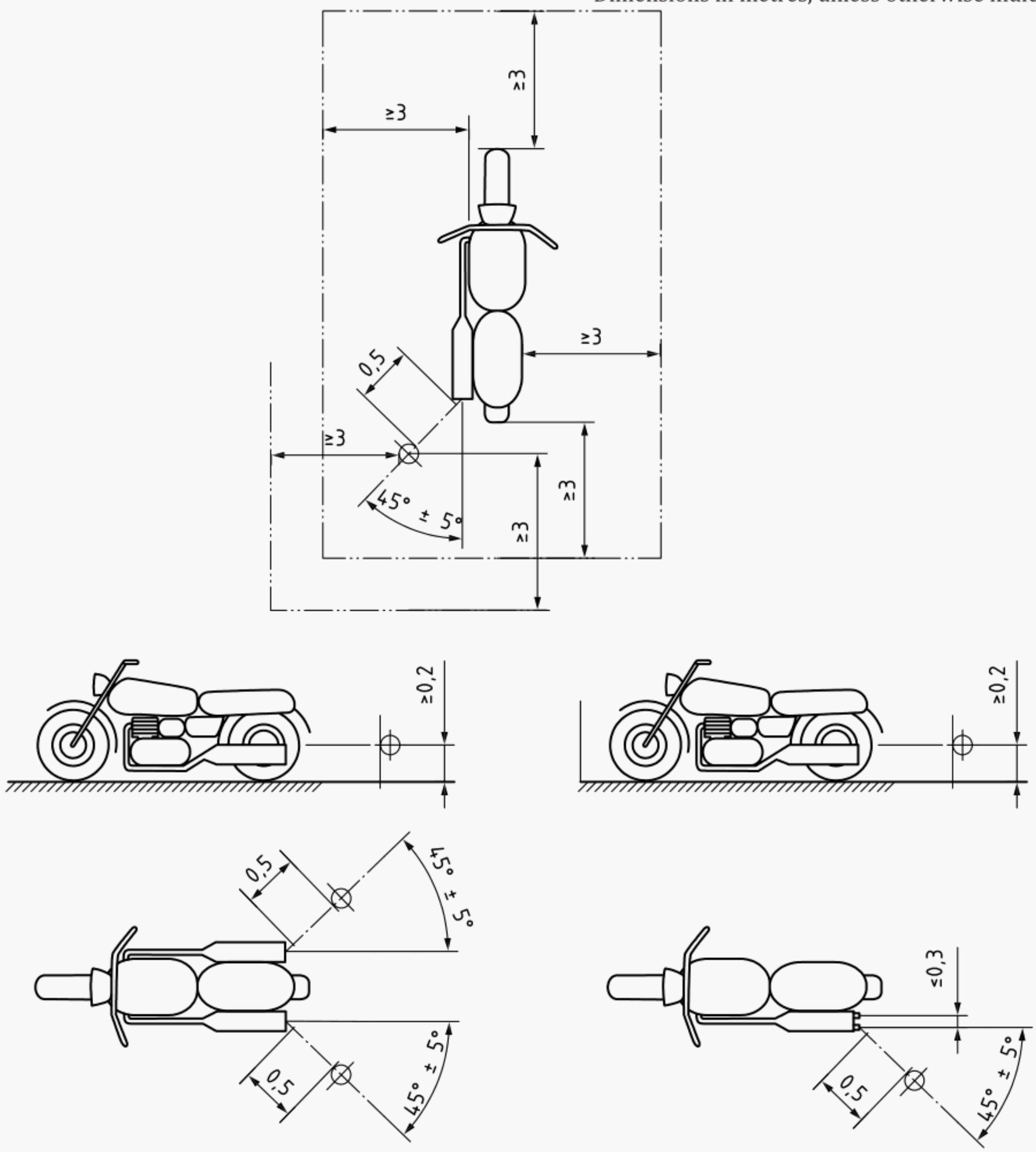

a)

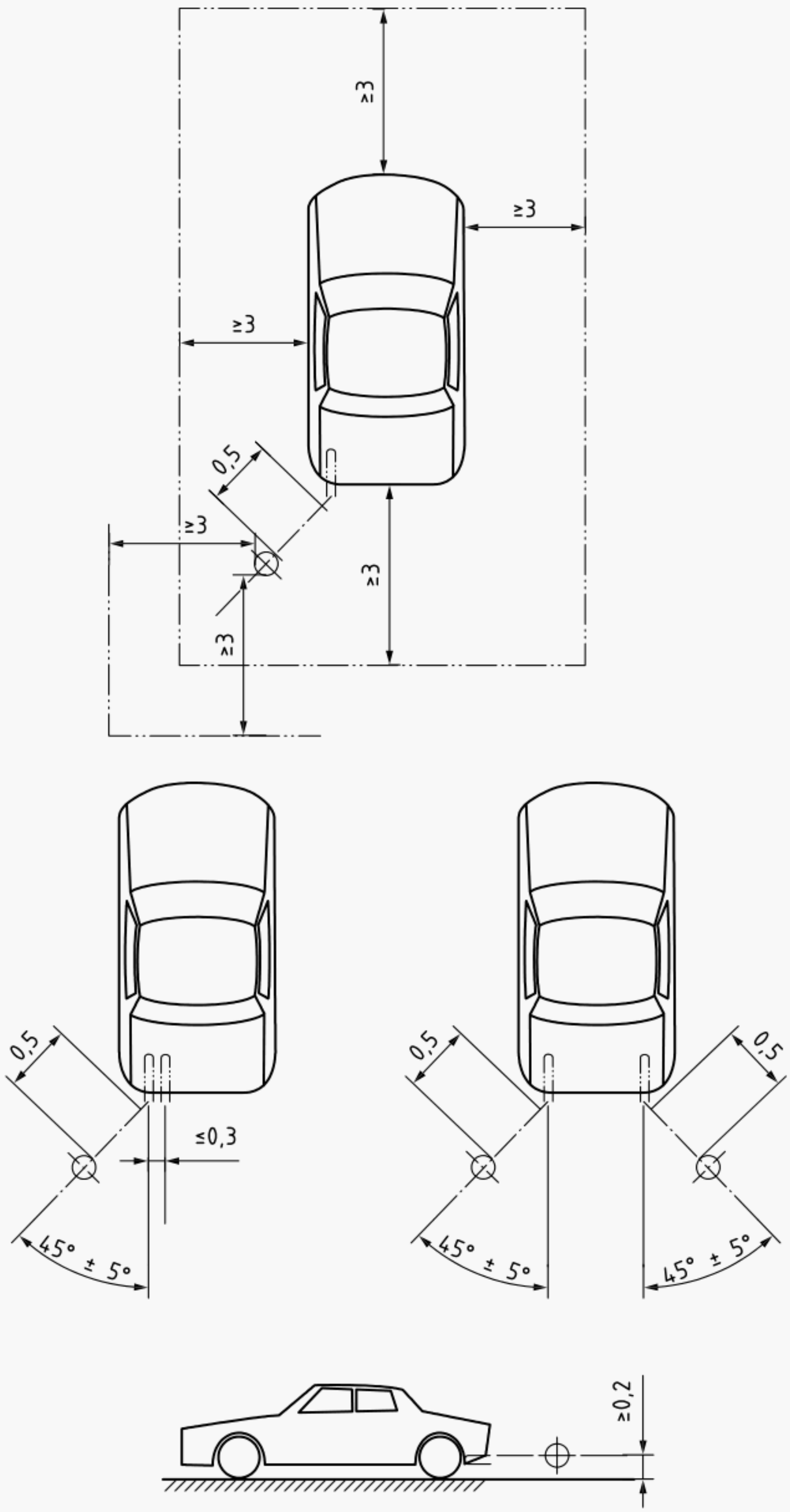

b)

© ISO 2019 – All rights reserved

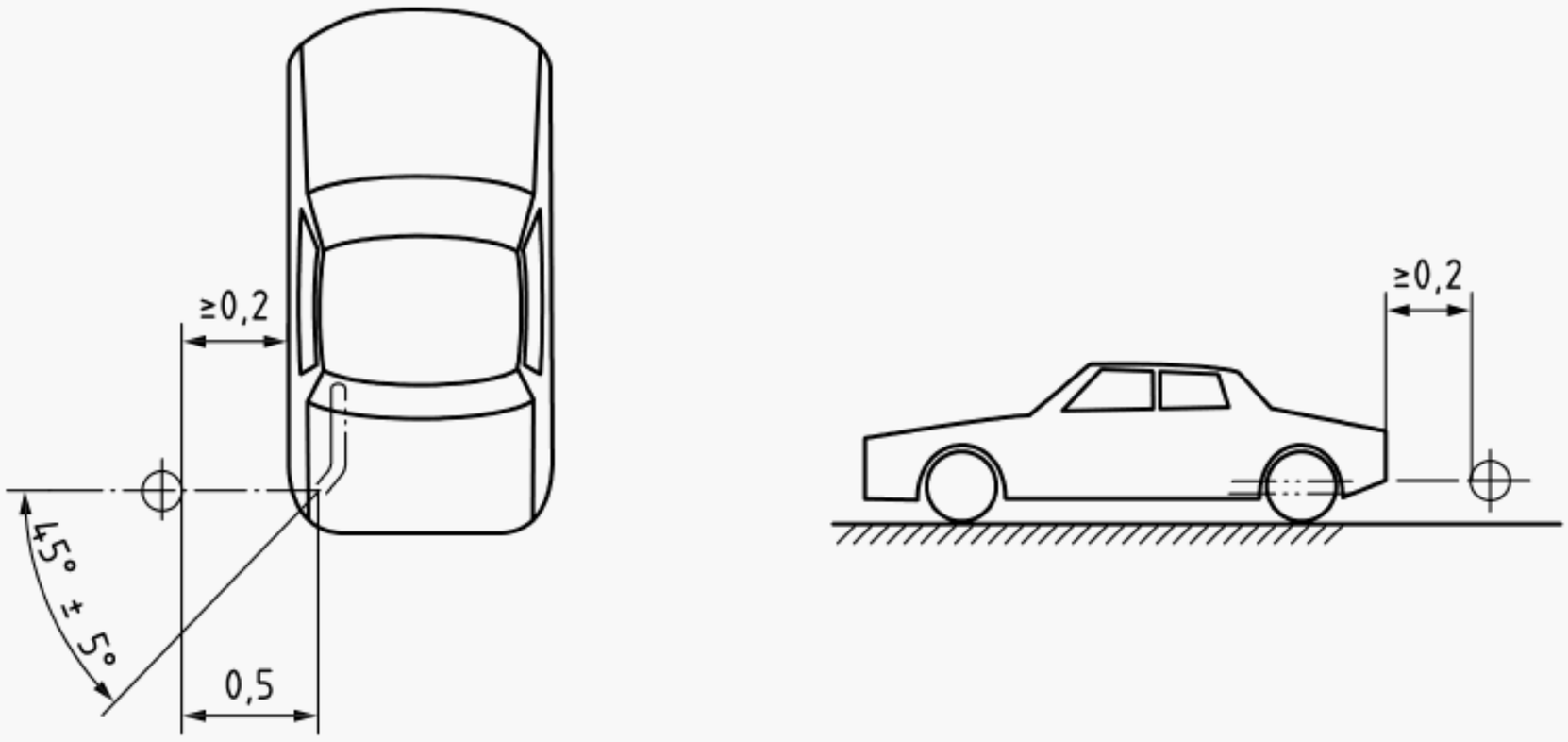

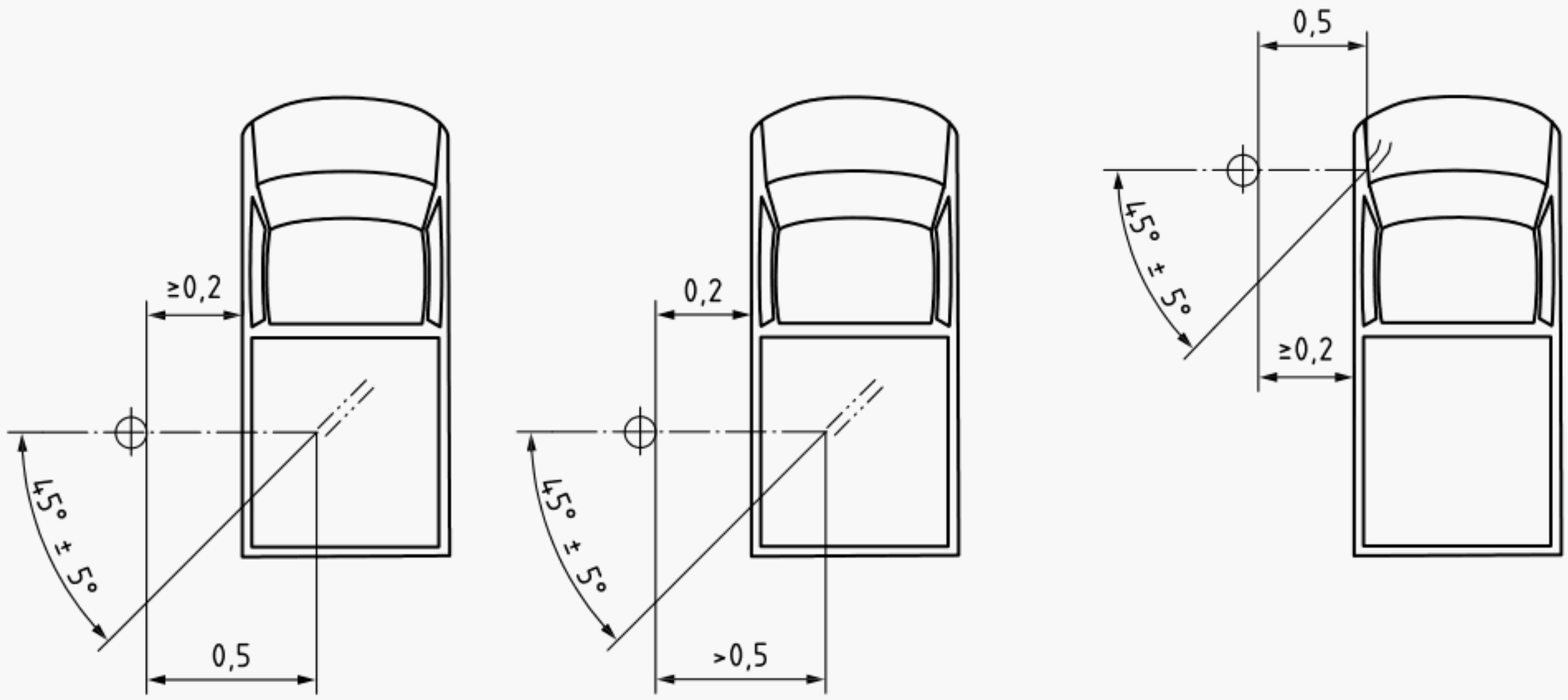

c)

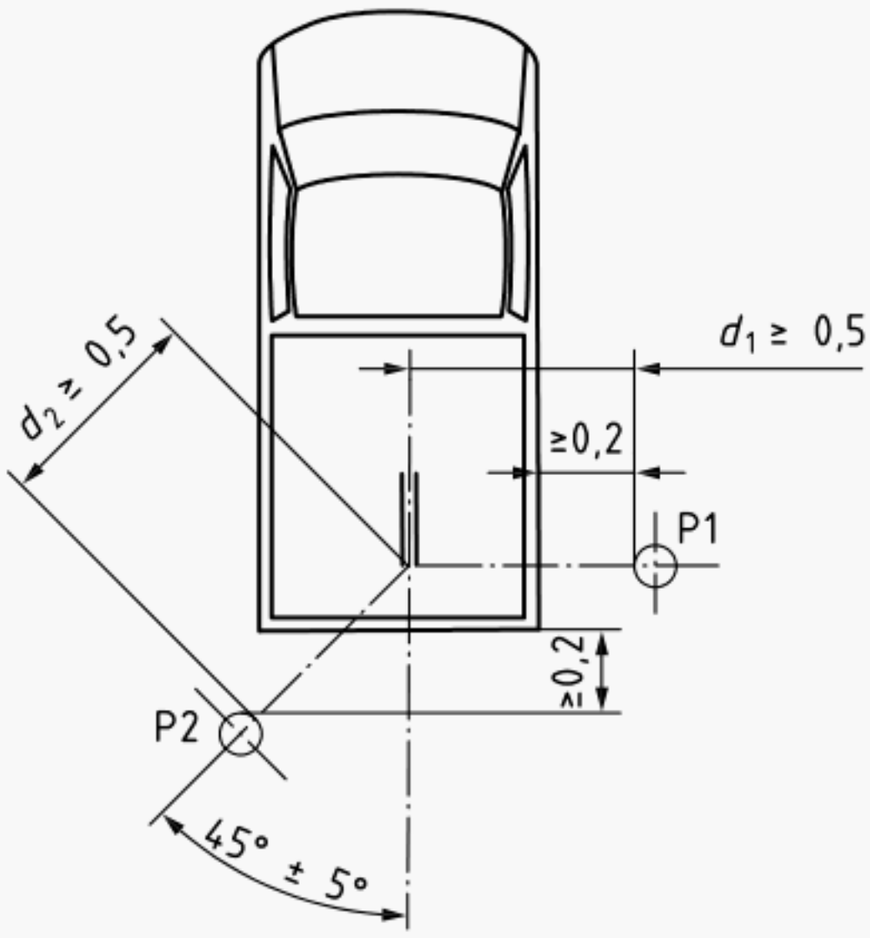

d)

© ISO 2019 – All rights reserved

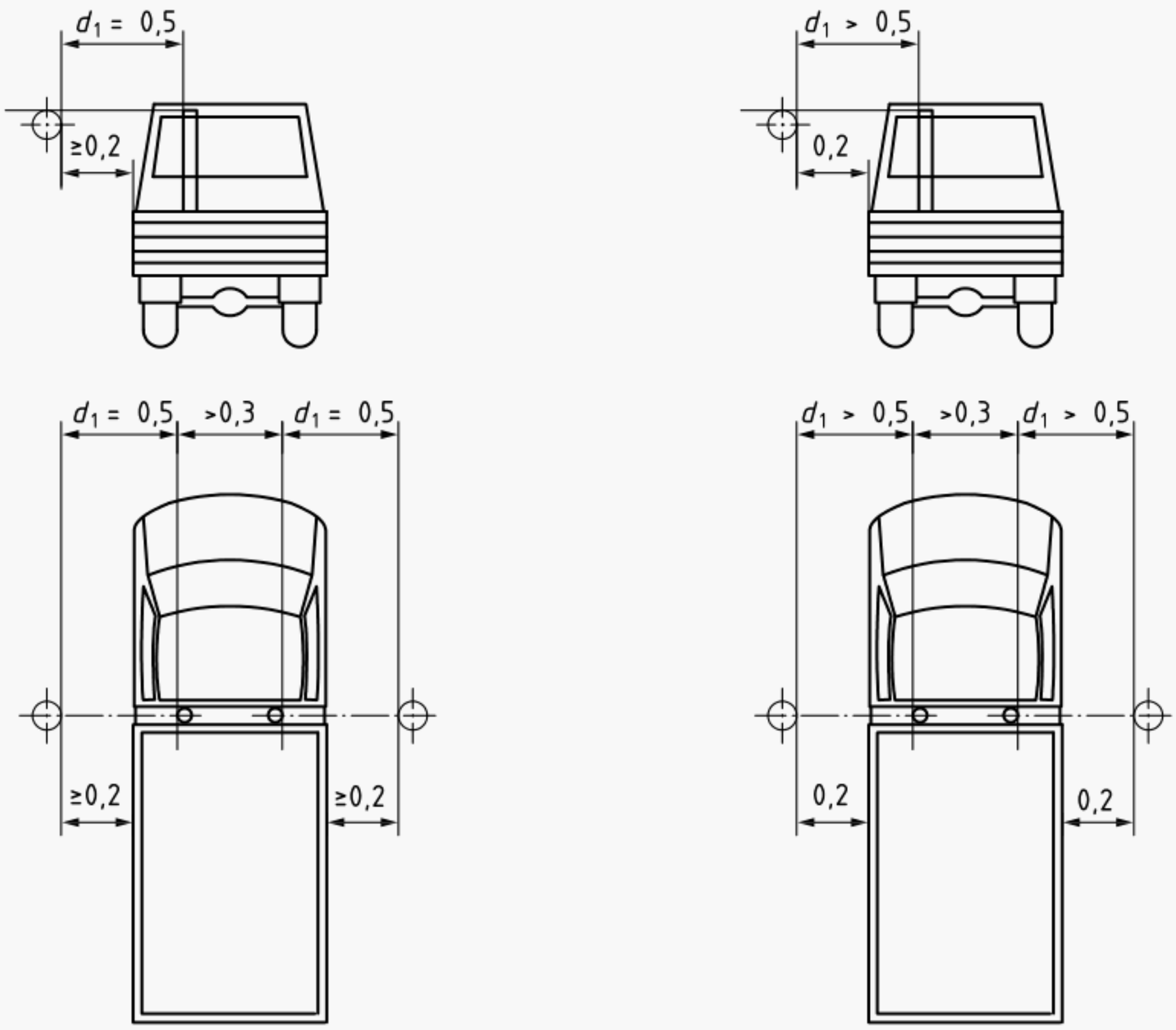

e)

Key

P1, P2 microphone positions 1 and 2, respectively

d_1, d_2 distances from the exhaust pipe to P1 and P2, respectively

Figure 2 — Examples of microphone positions for various exhaust locations

6.4 Target engine speed

6.4.1 General

If the vehicle cannot reach the engine speed as stated in 6.4.2 and 6.4.3, the target engine speed shall be 5 % below the maximum possible engine speed for the stationary test.

6.4.2 Vehicles of category L

The target engine speed shall be

— 75 % of the rated engine speed, S, for vehicles with $S \leq 5\,000\ \text{min}^{-1}$,

— 50 % of the rated engine speed, S, for vehicles with $S > 5\,000\ \text{min}^{-1}$,

with a tolerance of ±5 %.

© ISO 2019 – All rights reserved

6.4.3 Vehicles of category M, N

The target engine speed shall be:

— 75 % of the rated engine speed, S, for vehicles with $S \leq 5\,000\ \text{min}^{-1}$,

— 3750 min^{-1} for vehicles with a rated engine speed $5\,000 < S < 7\,500\ \text{min}^{-1}$,

— 50 % of the rated engine speed, S, for vehicles with $S \geq 7\,500\ \text{min}^{-1}$.

If the vehicle cannot reach the engine speed as stated above, the target engine speed shall be 5 % below the maximum possible engine speed for that stationary test.

For vehicles for which the engine speed is a fixed value (for example, but not limited to, series hybrids) either above or below the target engine speed and cannot be adjusted by the accelerator, the test shall be carried out at the fixed engine speed.

6.5 Engine operating conditions

The engine speed shall be gradually increased from idle to the target engine speed, not exceeding the tolerance band as given in 6.4.2 and/or 6.4.3 and held constant. Then the throttle control shall be rapidly released, and the engine speed shall be returned to idle. The sound pressure level shall be measured during a period consisting of constant engine speed of at least 1 s and throughout the entire deceleration period. The maximum sound level meter reading shall be taken as the test value.

The measurement shall be regarded as valid if the test engine speed during the constant engine speed phase does not deviate from the target engine speed by more than the tolerances given in 6.4.2 and 6.4.3, for at least 1 s.

6.6 Multi-mode exhaust system

For vehicles equipped with a multi-mode exhaust system and having manual driver selectable modes which influence the sound emission of the vehicle, the stationary sound shall be tested in all modes.

7 Measurements

Measurements shall be made according to the microphone location(s) described in 6.3. At least three measurements for each test position (outlet) shall be made.

The maximum A-weighted sound pressure level indicated during the test shall be noted, mathematically rounded to the first significant digit before the decimal place (e.g. 92,4 shall be rounded to 92 while 92,5 shall be rounded to 93).

The test shall be repeated until three consecutive measurements that are within 2 dB of each other are obtained at each outlet.

The result for a given outlet is the arithmetic average of the three valid measurements, mathematically rounded as given above, and shall be reported as the A-weighted sound pressure level, L_{Arep}, as given by Formula (1):

$$L_{\text{Arep}} = \frac{L_{\text{Ameas},1} + L_{\text{Ameas},2} + L_{\text{Ameas},3}}{3} \tag{1}$$

For vehicles equipped with multiple exhaust outlets, the sound pressure level reported, L_{Arep}, shall be for the outlet having the highest average sound pressure level.

For vehicles equipped with a multi-mode exhaust system and driver selectable modes according to 6.6, the reported sound pressure level, L_{Arep}, shall be for the mode having the highest average sound pressure level.

© ISO 2019 – All rights reserved

8 Interpretation of results

The result of testing a vehicle in use may be interpreted by comparison with the results of the reference test in which the vehicle was tested using the same method, for instance during type approval.

9 Measurement uncertainty

The measurement procedure described in the preceding clauses is affected by several parameters that lead to variations in the resulting level observed for the same subject. The source and nature of these perturbations are not completely known and sometimes affect the end result in a non-predictable way. The uncertainty of results obtained from measurements according to this document can be evaluated by the procedure given in ISO/IEC Guide 98-3, or by inter-laboratory comparisons in accordance with ISO 5725 (all parts)[6]. Since extensive inter- and intra-laboratory data are not yet available, the procedure given in ISO/IEC Guide 98-3 was followed to estimate the uncertainty associated with this document. The uncertainties given below are based on existing statistical data, analysis of tolerances stated in this document and engineering judgment. The uncertainties so determined are grouped as follows:

a) variations expected within the same test laboratory and slight variations in ambient conditions found within a single test series (run-to-run);

b) variations expected within the same test laboratory but with a variation in ambient conditions and equipment properties that can normally be expected during the year (day-to-day);

c) variations between test laboratories where, apart from ambient conditions, also equipment, staff and road surface conditions are different (site-to-site).

If reported, the expanded uncertainty, together with the corresponding coverage factor for the stated coverage probability of 95 % as defined in ISO/IEC Guide 98-3, shall be given. Information on the determination of the expanded uncertainty is given in Annex B.

NOTE Annex B gives a framework for an analysis based on ISO/IEC Guide 98-3 that can be used to conduct future research on measurement uncertainty for this document.

Table 1 gives the variability of measurement results for a coverage probability of 95 %. The data express the variability of results for a certain measurement object and do not cover product variation.

Table 1 — Variability of measurement results for a coverage probability of 95 %

Run-to-run dB	Day-to-day dB	Site-to-site dB
1,2	1,8	2,9

Until more specific knowledge is available, the data for site-to-site variability can be used in test reports to state the expanded measurement uncertainty for a coverage probability of 95 %.

Due to the uncertainty influence, differences between the sound pressure level of the vehicle in use and that in corresponding reference tests should not be considered significant unless they are equal to or larger than 5 dB.

The variations in the sound pressure level of identical units of a production process are outside the scope of this document. Such variation is within the scope of the quality control systems of the manufacturer.

10 Test report

The test report shall include the following information:

a) reference to this document, i.e. ISO 5130:2019;

 © ISO 2019 – All rights reserved

b) test site, ground conditions and weather conditions;

c) type of measuring equipment, including the windscreen;

d) A-weighted sound pressure level typical of the background noise;

e) identification of the vehicle, its engine and its transmission system;

f) general description of the location of the engine and exhaust outlet;

g) location and orientation of the microphone;

h) engine operating speed used for the test;

i) selectable engine and/or exhaust operating mode;

j) A-weighted sound pressure level, L_{Arep}, determined by the test.

© ISO 2019 – All rights reserved

Annex A
(informative)

Technical background information

There were several technical reasons behind the revision of ISO 5130:2007 and its Amendment ISO 5130:2007/Amd.1:2012. Since the last revision of this procedure, there has been continuous development of vehicle technology, including the reduction of exhaust noise and the design of vehicle exhaust systems. Active sound devices, such as multi-mode exhaust systems, active sound enhancement systems or active sound effects such as "backfire" have been introduced.

The original scope of the procedure was to provide a simple method for use in roadside checks of exhaust systems, e.g. by the police or road authorities, to verify proper functioning of the original system or check for manipulation. In some countries/regions, a general noise limit for different categories of vehicles has been introduced and control is performed to check for faults in the exhaust system. This application of the procedure causes inaccuracies for vehicles with rear- or mid-engine, as the engine noise can be the dominating noise source, thereby interfering with the intent of the measurement. In such cases, flexible shields are necessary to separate the different noise sources during the test, adding complexity and measurement variability.

Investigations have shown that the present method is not particularly suited to check the exhaust system against a general noise limit, because of the influence of other vehicle-noise sources at the position of the microphone. The extent to which other noise sources can contribute to the stationary measurement is vehicle-design dependent. These investigations also show that the noise close to the exhaust pipe is very much dependent on engine speed and can vary as much as 20 dB over a typical range of operating engine speeds. Because a vehicle exhaust system is an acoustic-tuning element, levels of noise do not necessarily increase in a linear fashion with increasing engine speed. Thus, it seemed prudent to revise ISO 5130:2007 and ISO 5130:2007/Amd.1:2012 in order to more clearly define the scope of the document and enhance the accuracy of the measurement method.

In several countries, for example the Member States of the European Union and Norway, a system has been introduced such that the stationary level of noise (measured during type approval or when imported as a used vehicle) is labelled in the vehicle-registration documents, which are kept with the vehicle. This concept provides a more efficient basis for spot checks of the performance of vehicles using a stationary test. Comparison of results of the level of noise obtained from a roadside, or periodic technical inspection, to the baseline level of noise obtained during type approval gives a more accurate measure of the performance of any given vehicle. This method could be added to the scope of this procedure to improve the validity of its application.

© ISO 2019 – All rights reserved

Annex B
(informative)

Measurement uncertainty — Framework for uncertainty analysis based on ISO/IEC Guide 98-3

B.1 General

The measurement procedure is affected by several perturbing factors that lead to variations in the resulting level observed for the same subject. The source and nature of these perturbations are not completely known and sometimes affect the end result in a non-predictable way. The accepted format for expression of uncertainties generally associated with methods of measurement is that given in ISO/IEC Guide 98-3. This format incorporates an uncertainty budget, in which all the various sources of uncertainty are identified and quantified, from which the combined standard uncertainty can be obtained. Uncertainties are due to

— variations in measurement devices, such as sound level meters, calibrators and engine speed measuring devices;

— variations in local environmental conditions that affect sound propagation at the time of measurement;

— variations in local environmental conditions that affect the characteristics of the source;

— the effect of environmental conditions that influence the mechanical characteristics of the source, mainly engine performance (air pressure, air density, humidity, air temperature);

— test-site properties.

The uncertainty determined in accordance with Clause 9 represents the uncertainty associated with this document. It does not cover the uncertainty associated with the variation in the production processes of the manufacturer. The variations in the exhaust sound pressure level of identical units of a production process are outside the scope of this document.

The uncertainty effects may be grouped in the three categories arising from the following sources (see Clause 9):

a) uncertainty due to changes in vehicle operation within consecutive runs, small changes in weather conditions, small changes in background noise levels and measurement system uncertainty, referred to as run-to-run variations;

b) uncertainty due to changes in weather conditions throughout the year, changing properties of a test site over time, changes in measurement-system performance over longer periods and changes in the vehicle operation, referred to as day-to-day variations;

c) uncertainty due to different test-site locations, measurement systems and vehicle operation, referred to as site-to-site variations.

The site-to-site variation comprises uncertainty sources from a), b) and c). The day-to-day variation comprises uncertainty sources from a) and b).

© ISO 2019 – All rights reserved

B.2 Expression for the calculation of vehicle stationary exhaust operation sound pressure level

The general expression for the calculation of stationary exhaust sound pressure level, L_{Arep}, is given by Formula (B.1):

$$L_{\mathrm{Arep}} = \frac{L_{\mathrm{Ameas},1} + L_{\mathrm{Ameas},2} + L_{\mathrm{Ameas},3}}{3} + \delta_1 + \delta_2 + \delta_3 + \delta_4 + \delta_5 + \delta_6 \quad \text{(B.1)}$$

where

L_{Arep} is the reported A-weighted sound pressure level;

$L_{\mathrm{Ameas},i}$ is the A-weighted sound pressure level from each individual test, i;

δ_1 is an input quantity to allow for any uncertainty in the measurement system;

δ_2 is an input quantity to allow for any uncertainty in the environmental conditions that affect sound propagation from the source at the time of measurement;

δ_3 is an input quantity to allow for any uncertainty in the engine speed;

δ_4 is an input quantity to allow for any uncertainty in the local environmental conditions that affect characteristics of the source;

δ_5 is an input quantity to allow for any uncertainty in the effect of environmental conditions on the mechanical characteristics of the power unit;

δ_6 is an input quantity to allow for any uncertainty in the effect of test site properties.

NOTE The inputs included in Formula (B.1) to allow for errors are those thought to be applicable in the state of knowledge when this document was prepared, but further research can reveal that there are others.

B.3 Uncertainty budget

The estimated values of the delta functions can be principally positive or negative, although they are considered to be zero for the given measurement; see Table B.1. Their uncertainties are not additive for the purpose of determining a measurement result.

Table B.1 — Uncertainty budget for determination of reported sound pressure level

Quantity	Estimate dB	Standard uncertainty u_i dB	Probability distribution	Sensitivity coefficient c_i	Uncertainty contribution $u_i c_i$ dB
$L_{\mathrm{Ameas},i}$	$L_{\mathrm{Ameas},i}$	—	—	1	—
δ_1	0	—	—	1	—
δ_2	0	—	—	1	—
δ_3	0	—	—	1	—
δ_4	0	—	—	1	—
δ_5	0	—	—	1	—
δ_6	0	—	—	1	—

© ISO 2019 – All rights reserved

From the individual uncertainty contributions, $u_i c_i$, the combined standard uncertainty, u, can be calculated according to the rules of ISO/IEC Guide 98-3, taking into account potential correlations between various input quantities.

NOTE The uncertainty evaluation described represents a framework that provides useful information to users of this document. This information represents the state of technical information at this time. Further work would be needed to provide uncertainty information on all terms in Formula (B.1) and all interactions between such terms.

B.4 Expanded uncertainty of measurement

The expanded uncertainty, U, is calculated by multiplying the combined standard uncertainty, u, with the appropriate coverage factor for the chosen coverage probability, as described in ISO/IEC Guide 98-3.

© ISO 2019 – All rights reserved

Bibliography

[1] SAE J1492:2008, *Measurement of Light Vehicle Stationary Exhaust System Sound Level Engine Speed Sweep Method*

[2] ISO 80000-2, *Quantities and units — Part 2: Mathematical signs and symbols to be used in the natural sciences and technology*

[3] ECE/TRANS/WP 29/78/Rev.6 — *Consolidated Resolution on the Construction of Vehicles*. Available at https://www.unece.org/trans/main/wp29/wp29wgs/wp29gen/wp29resolutions.html

[4] ISO 362-1:2015, *Measurement of noise emitted by accelerating road vehicles — Engineering method — Part 1: M and N categories*

[5] IEC 61672-2, *Electroacoustics - Sound level meters — Part 2: Pattern evaluation tests*

[6] ISO 5725 (all parts), *Accuracy (trueness and precision) of measurement methods and results*

© ISO 2019 – All rights reserved

This page deliberately left blank

NO COPYING WITHOUT BSI PERMISSION EXCEPT AS PERMITTED BY COPYRIGHT LAW

British Standards Institution (BSI)

BSI is the national body responsible for preparing British Standards and other standards-related publications, information and services.

BSI is incorporated by Royal Charter. British Standards and other standardization products are published by BSI Standards Limited.

About us

We bring together business, industry, government, consumers, innovators and others to shape their combined experience and expertise into standards -based solutions.

The knowledge embodied in our standards has been carefully assembled in a dependable format and refined through our open consultation process. Organizations of all sizes and across all sectors choose standards to help them achieve their goals.

Information on standards

We can provide you with the knowledge that your organization needs to succeed. Find out more about British Standards by visiting our website at bsigroup.com/standards or contacting our Customer Services team or Knowledge Centre.

Buying standards

You can buy and download PDF versions of BSI publications, including British and adopted European and international standards, through our website at bsigroup.com/shop, where hard copies can also be purchased.

If you need international and foreign standards from other Standards Development Organizations, hard copies can be ordered from our Customer Services team.

Copyright in BSI publications

All the content in BSI publications, including British Standards, is the property of and copyrighted by BSI or some person or entity that owns copyright in the information used (such as the international standardization bodies) and has formally licensed such information to BSI for commercial publication and use.

Save for the provisions below, you may not transfer, share or disseminate any portion of the standard to any other person. You may not adapt, distribute, commercially exploit or publicly display the standard or any portion thereof in any manner whatsoever without BSI's prior written consent.

Storing and using standards

Standards purchased in soft copy format:

- A British Standard purchased in soft copy format is licensed to a sole named user for personal or internal company use only.
- The standard may be stored on more than one device provided that it is accessible by the sole named user only and that only one copy is accessed at any one time.
- A single paper copy may be printed for personal or internal company use only.

Standards purchased in hard copy format:

- A British Standard purchased in hard copy format is for personal or internal company use only.
- It may not be further reproduced – in any format – to create an additional copy. This includes scanning of the document.

If you need more than one copy of the document, or if you wish to share the document on an internal network, you can save money by choosing a subscription product (see 'Subscriptions').

Reproducing extracts

For permission to reproduce content from BSI publications contact the BSI Copyright and Licensing team.

Subscriptions

Our range of subscription services are designed to make using standards easier for you. For further information on our subscription products go to bsigroup.com/subscriptions.

With **British Standards Online (BSOL)** you'll have instant access to over 55,000 British and adopted European and international standards from your desktop. It's available 24/7 and is refreshed daily so you'll always be up to date.

You can keep in touch with standards developments and receive substantial discounts on the purchase price of standards, both in single copy and subscription format, by becoming a **BSI Subscribing Member.**

PLUS is an updating service exclusive to BSI Subscribing Members. You will automatically receive the latest hard copy of your standards when they're revised or replaced.

To find out more about becoming a BSI Subscribing Member and the benefits of membership, please visit bsigroup.com/shop.

With a **Multi-User Network Licence (MUNL)** you are able to host standards publications on your intranet. Licences can cover as few or as many users as you wish. With updates supplied as soon as they're available, you can be sure your documentation is current. For further information, email cservices@bsigroup.com.

Revisions

Our British Standards and other publications are updated by amendment or revision.

We continually improve the quality of our products and services to benefit your business. If you find an inaccuracy or ambiguity within a British Standard or other BSI publication please inform the Knowledge Centre.

Useful Contacts

Customer Relations
Tel: +44 345 086 9001
Email: cservices@bsigroup.com

Subscription Support
Tel: +44 345 086 9001
Email: subscription.support@bsigroup.com

Knowledge Centre
Tel: +44 20 8996 7004
Email: knowledgecentre@bsigroup.com

Copyright and Licensing
Tel: +44 20 8996 7070
Email: copyright@bsigroup.com

BSI Group Headquarters

389 Chiswick High Road London W4 4AL UK

bsi.